IEI Group

IEI Group has 20 offices in 14 countries. IEI is alliance with Intel, Microsoft, Wind River, SAP and Amazon to offer a complete intelligent system with various options, including kinds of hardware devices supporting different operating systems, multiple applications, private/ hybrid/ public cloud computing and data storage/security for developing integrated solutions, collaborating new applications and expanding the markets.

IEI Integration Corp.
Industrial Integrated IoT Solution Provider

ArmorLink SH Corp.
Unique Electronic Manufacturing Service

QNAP Systems, Inc.
Leading Edge Computing Storage Provider

iEi GROUP 威強電集團

XINGWEI COMPUTER CO., LTD.
Professional Chassis Manufacturer

IEI Halza HealthIntelligence Co
Store, Track & Share Medical Data Service

BriteMED Technology Inc.
Intelligent Medical System Provider

About IEI Integration Corp.

IEI Integration Corp. builds up the business as a leading industrial computer provider, and turns to artificial intelligence and networking edge computing. IEI's products are applied in computer-based applications such as factory automation, computer telephony integration, networking appliances, security, systems, and in fields like AI, IoT (Internet of Things), national defense, police administration, transportation, communication base stations and medical instruments. IEI continues to promote its brand products as well as serving ODM vertical markets to offer complete and professional services. IEI strives to achieve the ultimate aim of IoT and AI, and to create comfortable and convenient living spaces for human beings by using advanced technologies.

IEI Global Service

B2B/B2C online shops and RMA service are open 24 hours a day.



www.ieiworld.com

Core Competence

IEI is committed to AIoT industry. In collaboration with our regional branches around the world, IEI aims at developing a complete AIoT ecosphere and leading the industry by integrating our diversified hardware products with strong, flexible software.



Digital Transformation

To keep moving forward and to respond the advances of 5G and AI technologies, IEI has revolutionized its business model to a new generation – digital transformation. The purpose is to provide digital customer experience and service in customer relationships, achieve 24/7 non-stop operation, and offer a digital workplace for internal employees. IEI has started the implementation of MarTech, SaleTech and SerTech, and set the year of 2020 as the first year of digital transformation of IEI Group to elevate customer experience, establish automatic revenue and reduce operating cost.

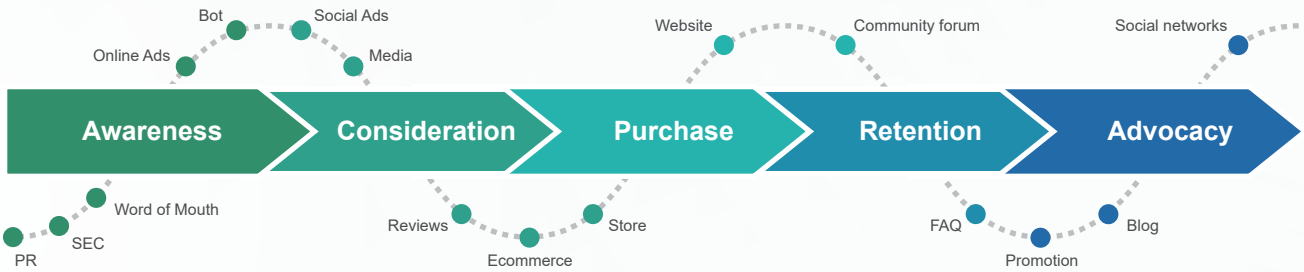

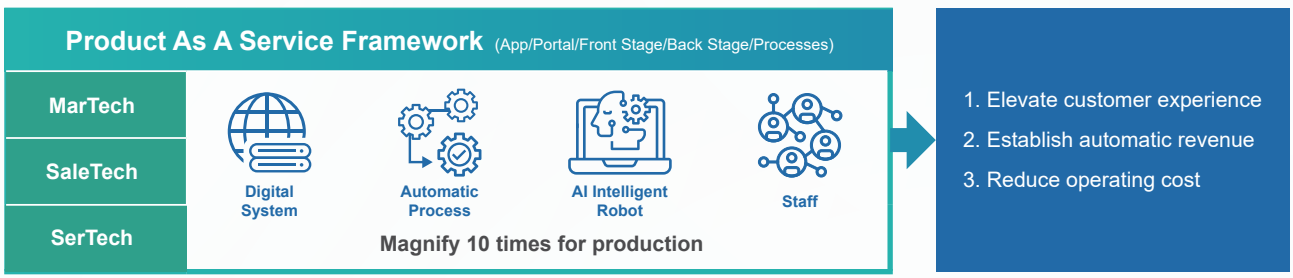

Company Awards

- Red Dot Design Award
- Taiwan Excellence Award
- iF Product Design Award
- ICT Month Innovative Elite
- Golden Pin Design Award

Certificates

ISO 28000	» 2007
QC 080000	» 2012
ISO 27001	» 2013
ISO 9001	» 2015
ISO 14001	» 2015
ISO 13485	» 2016
ISO 45001	» 2018

www.ieiworld.com

IEI AI Ready Systems

Artificial Intelligence, AI, is changing our lives from the past to the future. It enables machine learning by using a variety of training models to simulate and infer the status or appearance of objects. For example, the inference system with the video analysis model can perform face and vehicle license plate analysis for safety and security purposes.

Today, most of AI technology still rely on the data center to execute the inference, which will increase the risk of real-time application for applications such as traffic monitoring, security CCTV, etc. Therefore, it's crucial to implement a low-latency, real-time edge computing platform. So IEI develop series of inference system for AI edge computing in different using environment.



Traffic Monitoring



Retail Store Monitoring



Medical AI



Attendance System

AI Deep Learning Work Flow

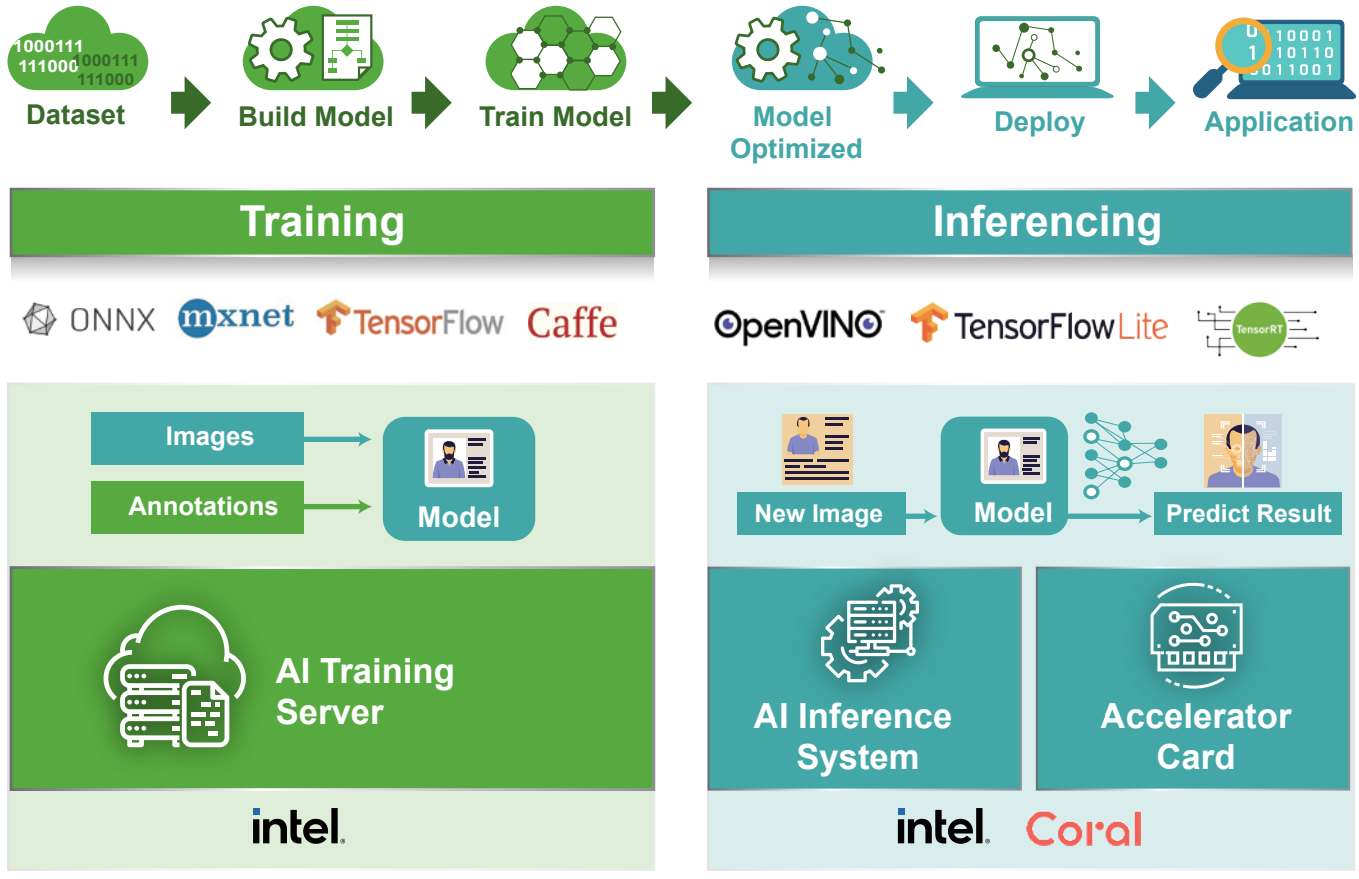

www.ieiworld.com

IEI AI Training System





GRAND-C422-20D

The GRAND-C422-20D is an AI training system which has maximum expansion ability to add in AI computing accelerator cards for AI model training or inference.

IEI AI Inference System

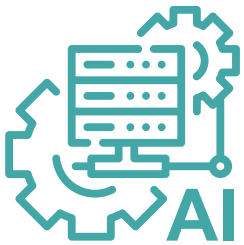

Note : Expansion support



PCIe card



MPCIE card



TANK-870 AIoT Dev. kit

Intel® SkyLake AI Dev. Kit



FLEX-BX200 AIoT Dev. kit

Intel® Coffee Lake Developer Kit



FLEX-BX210AI-Q470

Intel® Comet Lake AI Box PC



IDS-310AI

Intel® Apollo Lake AI Embedded System



ITG-100AI

Intel® Apollo Lake AI Embedded System



DRPC-230

Intel® Whisky Lake AI Embedded System



PAC-400AI

Intel® SkyLake AI Box PC



RACK-500AI

Intel® Coffee Lake AI Box PC



HTB-210-Q470

Intel® Comet Lake Medical AI Box PC

www.ieiworld.com

Networking Solution



Why PUZZLE Series?

Redefining and Maximizing Network Scalability

The next gen. network appliance, the PUZZLE series, is an uCPE solution consisting of software virtual network functions running on a standard operating system hosted on an open server.

Universal CPE (uCPE) is one of the most compelling use cases of Network Function Virtualization (NFV). Virtualization is the process of creating a software-based, or virtual, representation of something, such as virtual applications, servers, storage and networks. Network functions virtualization or NFV is a network architecture concept.

The IEI PUZZLE system can provide an open universal customer premises equipment (uCPE) solution that offers realtime software-defined wide-area network (SD-WAN) services that support both x86 and ARM architectures with any additional virtual network functions (VNF) services.

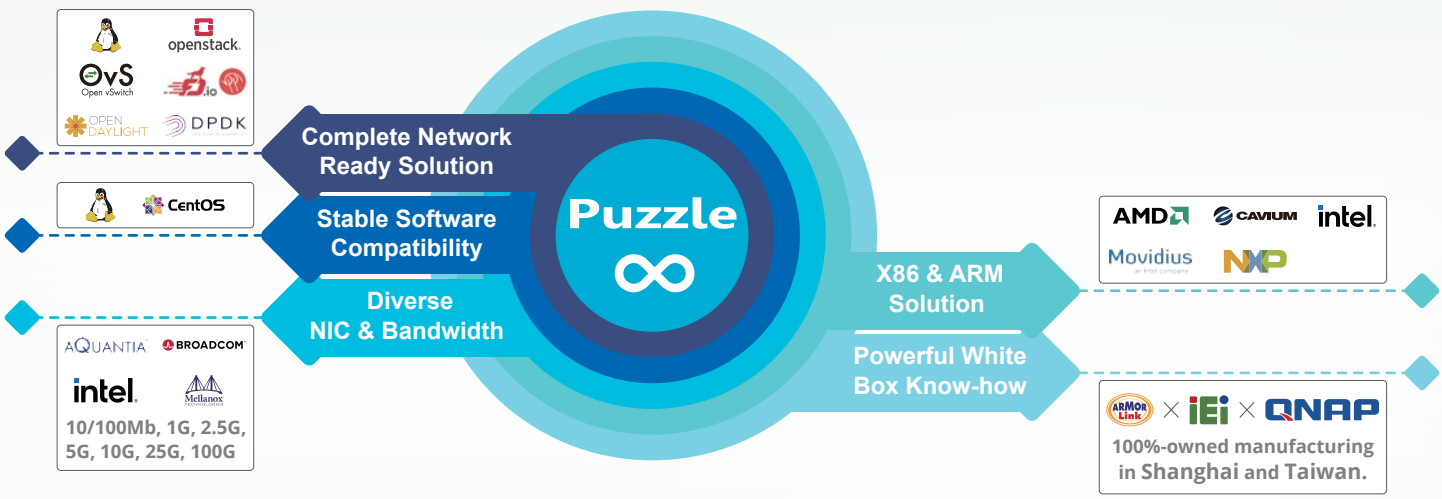

5G Solution

IEI's PUZZLE series network appliance is developed to meet the low latency and quality of service (QoS) requirements in 5G network. The PUZZLE series allows private companies/organizations to utilize the Virtual Evolved Packet Core (vEPC) framework by deploying Mobile Edge Computing (MEC) and Open Radio Access Network (O-RAN) architecture with network function virtualization (NFV) to replace traditional proprietary hardware equipment.

In order to meet 5G speed, point-to-point latency and service quality, network operators need to upgrade the entire front-end to back-end process. IEI's PUZZLE series can provide solutions for today's IoT that expands massively; it can boost cellular operations, IoT security and network challenges, and drive the Internet future to the edge.

IEI's Network Appliance Series for 5G Solution

- Network maintainability
- Coverage of wireless communication
- Reducing capital expenditure
- Throughput, and high scalability
- Trustworthy
- Security



Full Spectrum of Network Solutions



Wireless Gateway

Wireless gateway routes packets to wired or wireless WAN.

It combines the functions of a wireless access point, a router, and often provides firewall function as well.

WAN Optimization or Wan

The goal of WAN optimization is to speed up the data transfer, to reduce latency and insure bandwidth of access to critical applications and information.

NGFW Firewalls

With the purpose of protecting an organization's network and data assets, the next-generation firewalls offer a deep packet inspection function that goes beyond simple port and protocol inspection by inspecting the data carried in network packets.

Application Delivery Controller (ADC)

- Improve the performance of web applications in a data center
- A part of an application delivery network (ADN)
- Support multi-tenancy for deployment in data centers
- Support large number of sessions with a fast transaction rate.

Unified Threat Management (UTM)

- Network firewall
- Intrusion detection
- Prevention system (IDS/IPS)
- Gateway, VPN
- Offer cost-effective all-in-one security ideal

Cybersecurity

- Business protection against cyberattacks and data breaches
- Protection for data and networks, end users and endpoint devices
- Business continuity and Regulatory compliance
- Improved recovery time after a breach.

Complete Range of PUZZLE Series





PUZZLE-IN003A/B

PUZZLE-IN001/PUZZLE-IN001A

PUZZLE-IN002

PUZZLE-IN004

PUZZLE-A001/PUZZLE-A002

PUZZLE-IN005

PUZZLE-M801

Diverse PulM Network Modules



AQUANTIA
PulM-10G4T-AQC107

Intel
PulM-10G2SF-X710
PulM-10G4SF-XL710
PulM-10G4SF-XL710-BP

Mellanox
PulM-10G4SF-MLX

100GbE | 25GbE | 10GbE | 1GbE

Intel
PulM-100G2SF-E810

Mellanox
PulM-25G2SF-MLX

BROADCOM
PulM-1G8T-BCM5720

Intel
PulM-1G4T-I211
PulM-1G4T-I211-BP
PulM-1G4T-I350
PulM-1G4T-I350-BP
PulM-1G8T-I350
PulM-1G8T-I350-BP
PulM-1G4SF-I350
PulM-1G8SF-I350

www.ieiworld.com

Medical Solution

IEI Medical Scenario by Product Series

Pathology

- Precision Medicine
- Medical AI computing


HTB Series


TS-2888X

Outpatient Dept.

- EMR
- Vital Sign Measurement


POCi Series


POC Series


IASO Series



Operating Room

- Medical Image
- Vital sign collection


POCi Series


HTB Series

Medical Certifications

FCC Class B

CE 60601-1-2

UL 60601-1

www.ieiworld.com

IEI is deeply involved in the medical industry. We continuously integrate the latest technologies to develop high-quality and reliable nursing cart computers, all-in-one panel PCs, AI box PCs and other innovative products to provide high-quality medical solutions to you, create a good working environment for medical personnel, and ensure better medical services for patients.

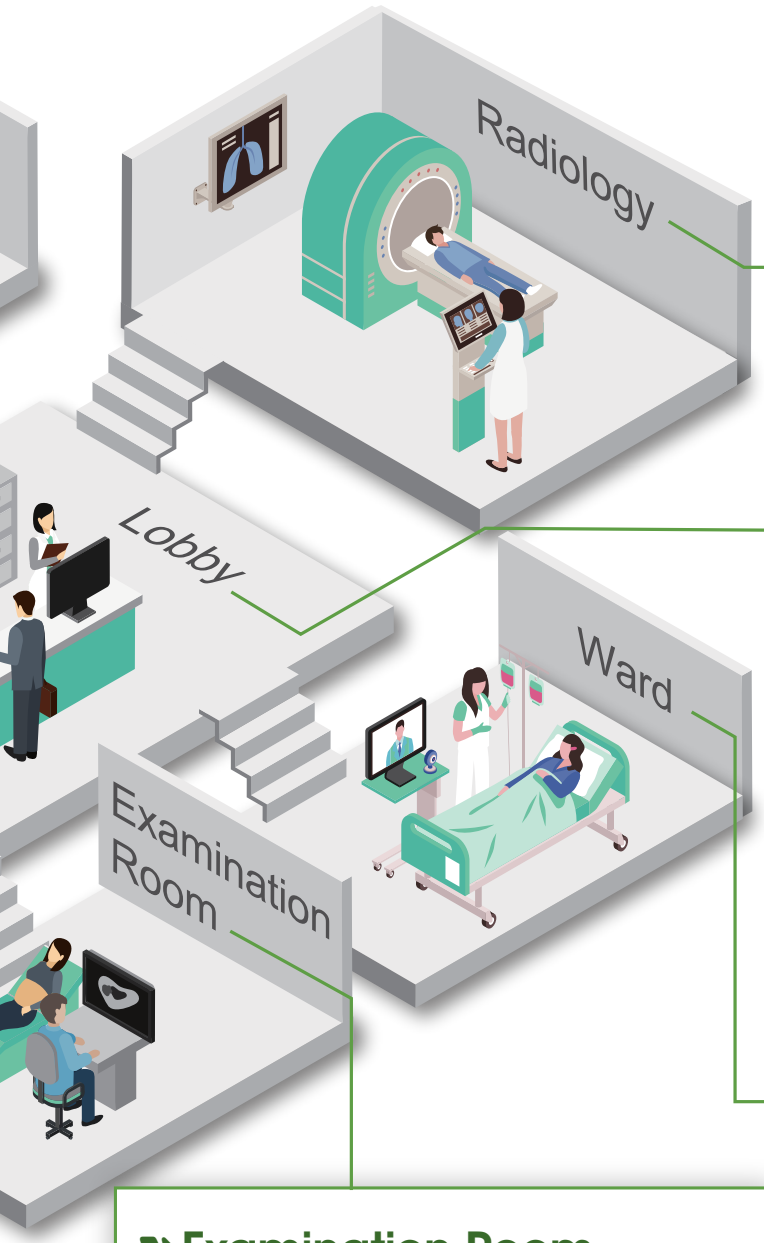

Radiology

- Medical Image
- Telemedicine
- RIS/LIS

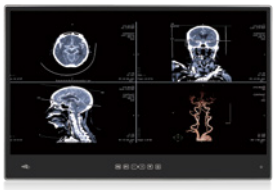
POCi Series


HTB Series

Lobby

- Queue management
- Self Service Kiosk


AFL3 Series


uIBX Series

Ward

- Medical HMI
- Nursing Call System
- Patient Engagement
- Mobile Nursing Station
- HIS/NIS


POCm Series


IASO Series


IOVU Series

Examination Room

- Endoscopy
- Sonography


POCi Series


HTB Series

www.ieiworld.com

All-in-One Medical Panel PCs

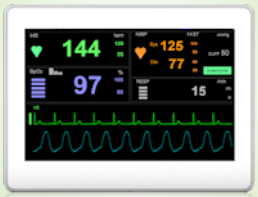

IASO Series
10"



POCi Series
22”/24”



POCm Series
22”/24”



POC Series
17”/22”

AI Medical Box PCs



HTB-210

Medical Embedded System



HTB-100

www.ieiworld.com

www.ieiworld.com

IEI Ice Lake-SP Solution

Intel® Ice Lake-SP Platform Overview

- **Increased Performance**
  Up to 1.40X General VS. Cascade Lake
  Up to 1.42X more Cores Per Processor - VS. Cascade Lake
- **Enhanced I/O**
  64 Lanes PCIe Gen4 per CPU
  8 channels of DDR4-3200 R-DIMM / LR-DIMM
  Intel resource director technology
- **Intel® Deep Learning Boost**
  Built-in AI acceleration
- **New Intel® Optane™ Persistent Memory 200 Series**
  Up to 512GB PMem, Up to 6TB/SOCKET
  Total system memory (DDR + Pmem)
- **New Hardware-Enhanced Security**
  Enhanced crypto processing
  Intel software guard extensions
  Intel total memory encryption

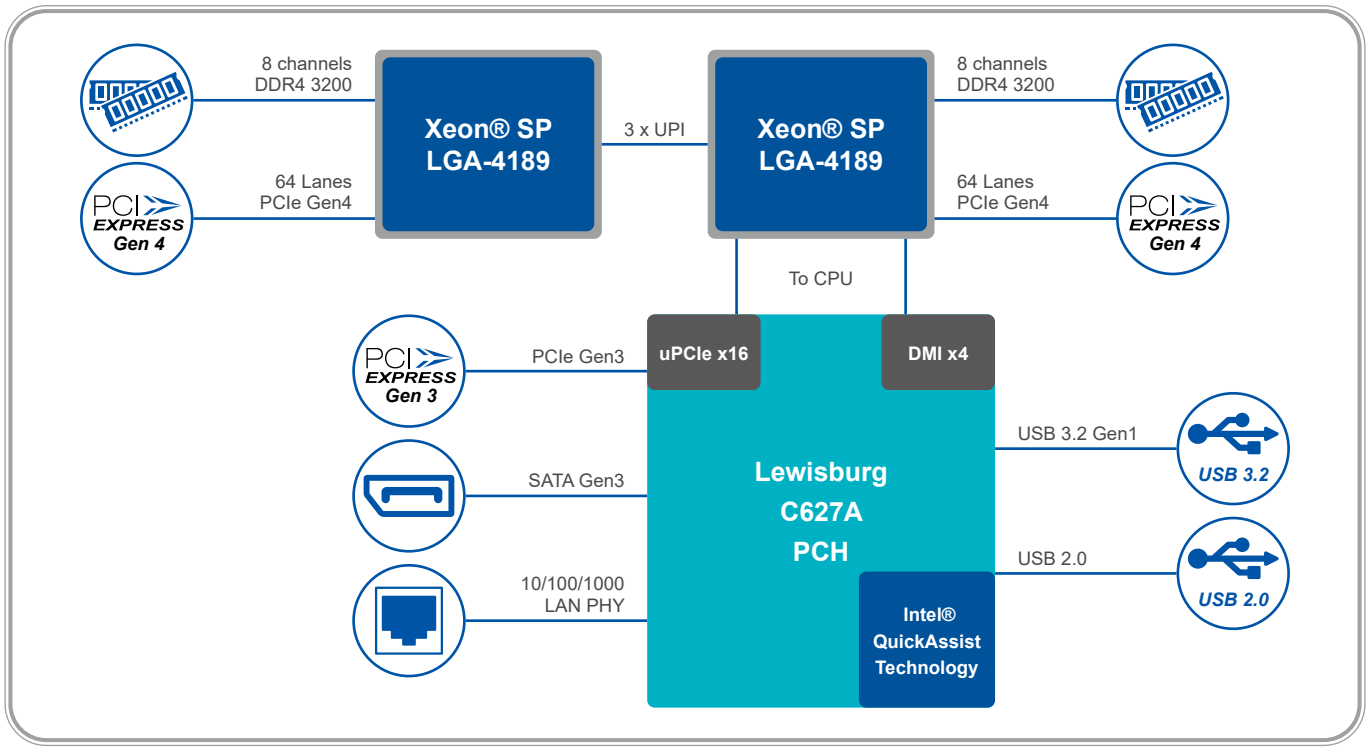

Intel® QuickAssist Technology

Intel® QuickAssist Technology integrates hardware acceleration of compute intensive workloads
Such as Bulk Cryptography, Public Key Exchange & Compression on Intel® Architecture Platforms

- Intel's 3rd Generation Technology
- Sub Gb/s to 100 Gb/s Rates
- Networking, Storage, Big Data, Cloud, Datacenter, and HPC Applications Receive High Performance Execution of:
  » Cryptographic Ciphers
  » Authentication
  » Public Key Exchange & Key Protection
  » Compression/Decompression
- Enables Standard Server & Cloud Platforms to Offer Ubiquitous Security and Compression/Decompression
- Provides a Converged Platform Architecture for Cloud, Networking, Storage & Big Data

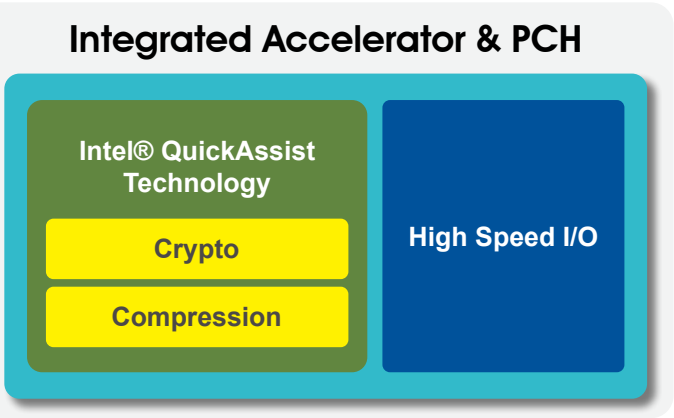

www.ieiworld.com

Intel® Ice Lake & Cascade Lake Comparison

Family Branding	Cascade Lake-SP	Ice Lake-SP
Process Node	14nm++	10nm+
Platform Name	Intel Purley	Intel Whitley
Socket	LGA 3647	LGA 4189
Max Core Count	Up To 28	Up To 38
Max Thread Count	Up To 56	Up To 76
Memory Support	6-Channel DDR4-2933 R-DIMM / LR-DIMM	8-Channel DDR4-3200 R-DIMM / LR-DIMM
PCIe Gen Support	PCIe 3.0 (48 Lanes)	PCIe 4.0 (64 Lanes)
TDP Range	Up to 205W	Up To 270W
3D Xpoint Optane DIMM	Apache Pass	Barlow Pass

Features of IEI Product with Intel® Ice Lake-SP

CPU 64 Lanes PCIe Gen4

PCI EXPRESS 4.0

Ice Lake extends to Whitley platform to these key PCIe4.0 capabilities

- Higher performance storage (Next generation NVME) with double the speed of PCIe3.0
- Faster Ethernet capability to eliminate throughput bottlenecks for data intensive applications (100/200G NIC cards)
- FPGA/GPU accelerators to support emerging machine learning and deep learning workloads with uncompromised PCIe4.0 bandwidth and lowest latency

U.2

IEI provides new products supporting Next Generation Form Factor. The U.2 interface utilizes the existing physical interface, and the bandwidth is faster within PCIe 4.0 x4 signal, which is several times more than SATA interface. The U.2 interface combines the features of SATA and SAS, and uses the signal pin to fill the connector of the SAS interface. The L-type foolproof design, except the PCIe interface, also compatible with various mainstream hard disc interface such as SATA, SAS and SATA E.

U.2 (SFF-8639)

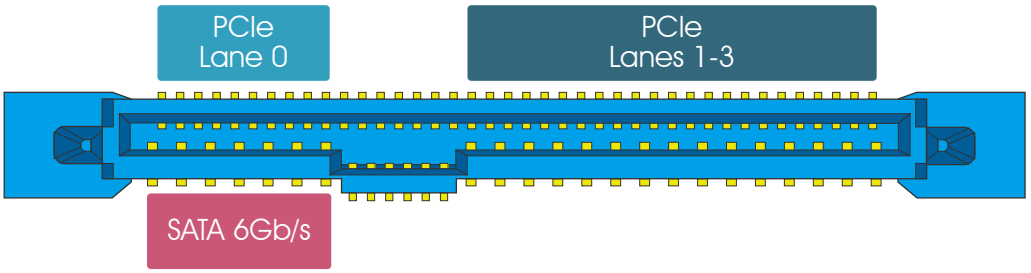

Intel® Optane™ Persistent Memory 200 Series

This new persistent memory is designed to exist on the same bus alongside volatile memory such DRAM and often works in conjunction with it to achieve higher overall system memory capacity or to allow it to achieve better performance through DRAM caching.

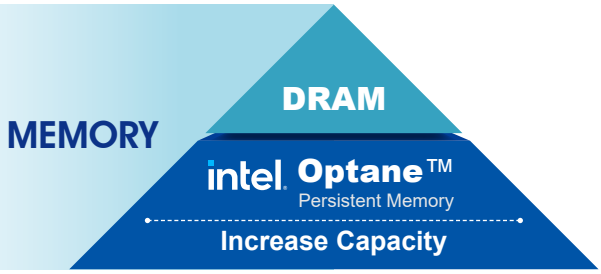

www.ieiworld.com

10th Gen Intel® Comet Lake-S Solution

Intel® Comet Lake Platform Overview

IOTG Comet Lake is the follow on to Coffee Lake Refresh in our S-Series swim lane (including Intel® Xeon® Entry Workstation). 10th Gen Intel® Core platform with up to 10 Cores and improved performance over CFL-R. The Comet Lake up to 31% better integer multi-tasking compute intensive application performance on 10th Generation Intel® Core™ i9-10900E vs 9th Gen Intel® Core™ i7-9700.Ranging from 4 to 10 cores, with increased I/O capacity and the latest DDR4-2933 memory support, these processors deliver the performance required to consolidate multiple workloads.

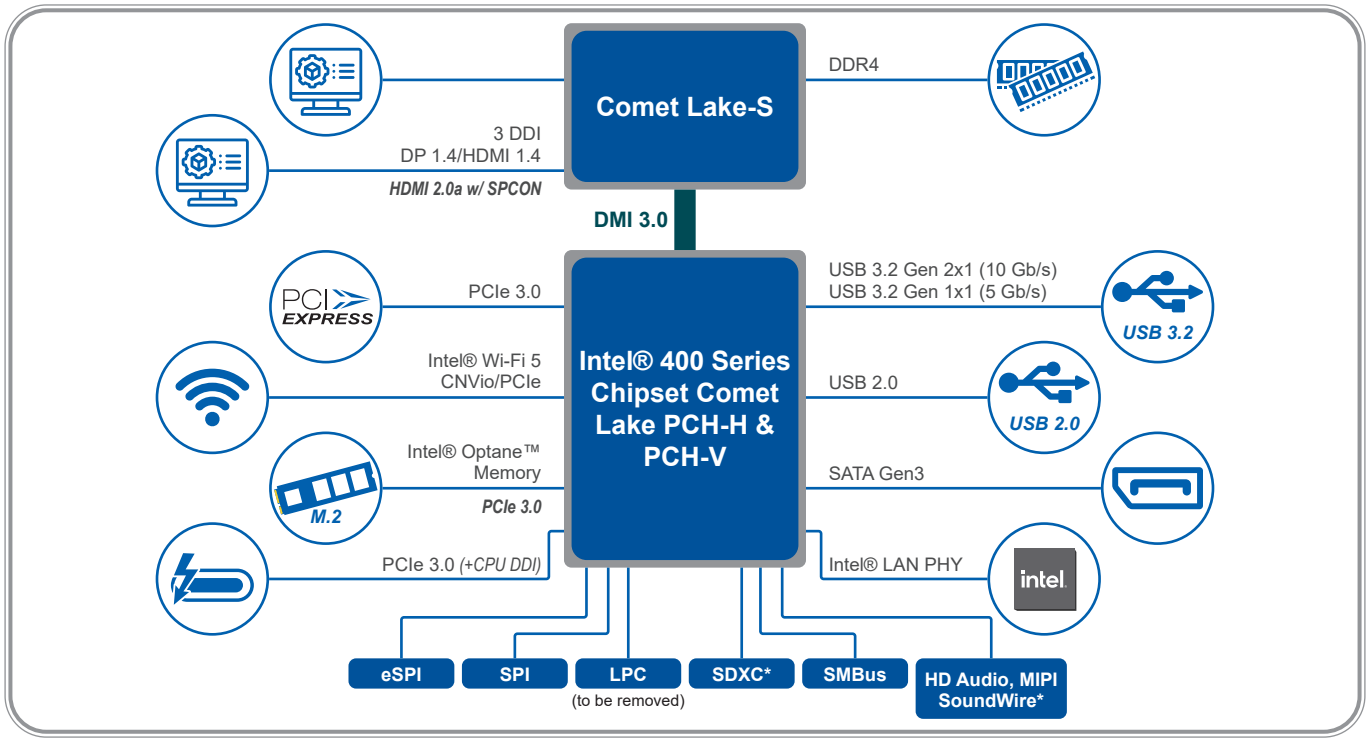

IOTG Coffee Lake-S to Comet Lake-S LGA Package & Socket TArgets

S-Series Platforms

2017/2018

LGA1151

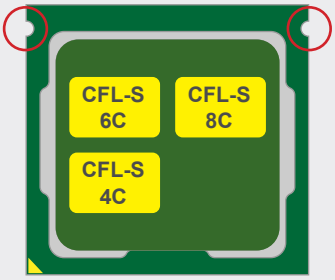

2019/2020

LGA1200

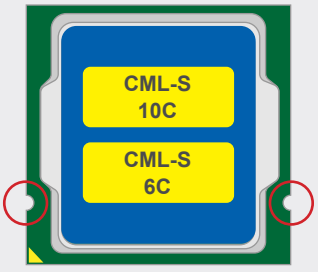

- Comet Lake will transition to a higher pin count package.
- Comet Lake LGA will not have backward compatibility with legacy platforms.
- No changes to ILM dimensions or thermal solution retention.
- Comet Lake LGA improves power delivery & support for future incremental I/O features.

Comet Lake-S Key Keatures

- Up to 4.7 GHz max frequency
- DDR4-2933 memory
- Integrated and discrete Gigabit-WiFi
- Intel® Smart Sound Technology
- Integrated USB 3.2 Gen 2
- Intel® Media SDK
- Media and display features for premium 4k content support
- Intel® Turbo Boost Technology 3.0

www.ieiworld.com

- W480E is pin compatible with Q470E and H420E
- H410 is not PIN compatible with W480E, Q470E and H420E

	2019		2020	
	1H	2H	1H	2H
	Coffee Lake-S Refresh Processor Intel® 300 Series Chipset		Comet Lake-S Processor Intel® 400 Series Chipset	
Entry Workstation	C246		W480E[1]	
Corporate with Intel® vPro™ (iSIPP)	Q370		Q470E[1]	
Value	H310		H420E[1]	H410

Embedded Use Conditions

1. "E" Suffix on Intel® 400 Series Chipsets designates Embedded Use Condition.

More Features on IEI Comet Lake SBC Products

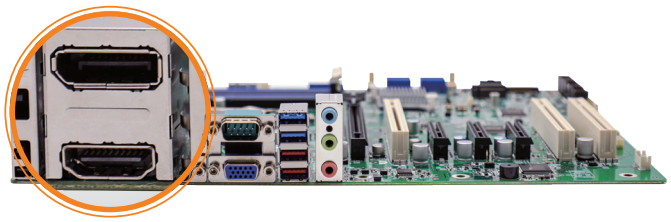

Media & Display Features for Premium 4K Content Support

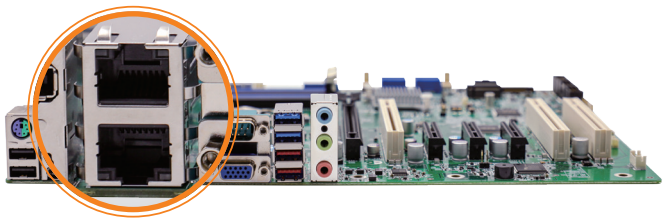

Integrated Intel® 2.5 GbE LAN Support

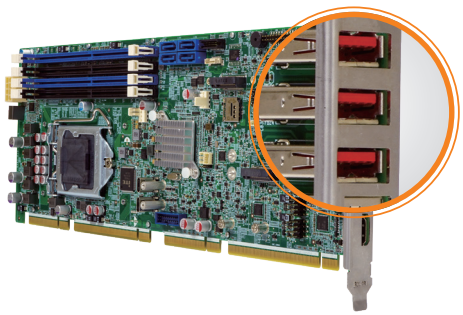

Integrated USB 3.2 Gen 2 (10 Gb/s) Support

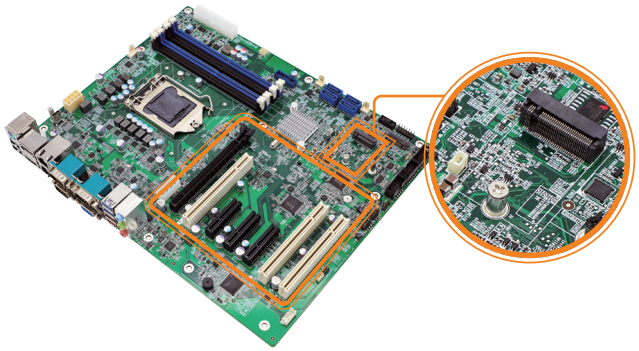

Motherboards with rich PCIe and M.2 slots for different expansion cards.

Supported Operating Systems - Comet Lake

Type	Operating System	Support
Microsoft	Windows 10 IoT Enterprise RS5 (64bit)	Intel, Microsoft
	Windows* Server 2019 (Xeon W Only)	Intel, Microsoft
Linux*	Ubuntu*, SUSE, Red Hat* Enterprise, Wind River Linux	Canonical Ltd., Attachmate Group, Red Hat, Wind River Systems and open source community
	Yocto Project* BSP tool-based embedded Linux distribution (64bit)	Intel, Yocto Project community
RTOS	Wind River VxWorks* 7	Wind River systems

* Distributions supported depend on each CPU sku.

www.ieiworld.com

Intel® Tiger Lake-UP3 Solution

Intel® Tiger Lake-UP3 Platform Overview

Graphics Media, and Display



- New Xe (Gen12) Gfx Engine with up to 96 Eus
- 4 independent display units (4 x 4K or 2 x 8K)
- Image processing unit IPU6

* Up to 27MP image capture
* Up to 4K@60fps video performance
* Support for 4 concurrent streams
* VTIO and RGB-IR for facial recognitionn

Security and Manageability

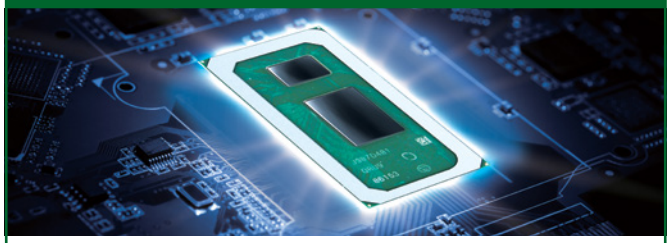

- Intel® Total Memory Encryption (Intel® TME)

* Hardware based encryption to protect entire memory contents from physical attacks

- Intel® AES-NI

* A new, hardware based AES-NI instruction set to protect private keys from malware
* Keys are no longer exposed and handlers are utilized to perform encrypt/decrypt operations

- Control-Flow Enforcement Technology

AI Experience

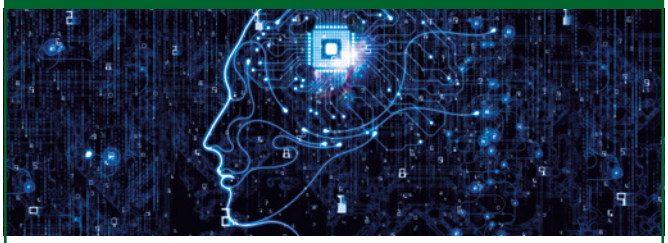

- Vector Neural Network Instruction (VNNI) improves inferencing workload performance
- Common industry wide AI frameworks optimized on Tiger Lake architecture (via OpenVINO™)
- Intel® Deep Learning Boost
- AI/DL Instruction Sets including VNNI and CV/AI applications

Enhanced Features



- Up to 4 cores
- In-Band ECC available
- PCIe 4.0 (off CPU complex), 12 HSIO lanes (off PCH complex)
- Improved Thunderbolt™ data performance
- Integrated Type C subsystem with for USB4 compliance

Intel® Tiger Lake-UP3 Platform Block Diagram

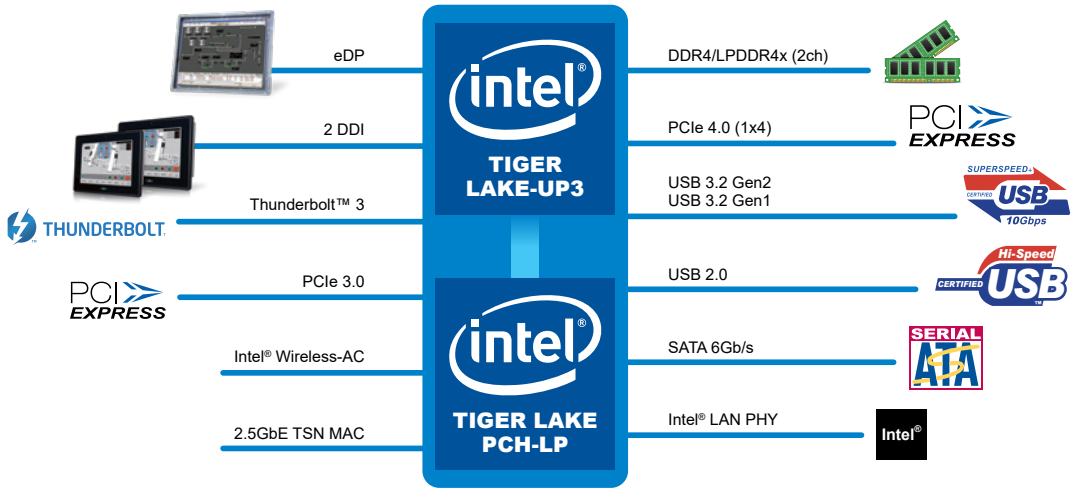

www.ieiworld.com

Intel® Core™ Processor Generational Comparison

Brand	Kaby lake-U	Whiskey lake-U	Tiger lake-UP3
Launch	2017	2019	2020
Process	14nm	14nm	10nm
Core	2	4	4
Processor TDP	15W	12.5/15/25W	12/15/28W
Memory	LPDDR3-1866 DDR4-2133 DDR3L-1600	LPDDR3-1866/2133 DDR4-2400 DDR3L-1600	LPDDR4x 4267 DDR4 3200 In-Band ECC
PCI Express Lanes	Up to 12 PCIe 3.0 lanes (PCH)	Up to 16 PCIe 3.0 lanes (PCH)	Up to 12 PCIe 3.0 lanes (PCH) Up to 4 PCIe 4.0 lanes (CPU)
Storage	Intel® Optane™ Memory, PCIe 3.0, SATA 6Gb/s, SD 3.0, eMMC 5.0	Intel® Optane™ Memory, PCIe 3.0, SATA 6Gb/s, SD 3.0, eMMC5.1	Intel® Optane™ Memory, PCIe 3.0, PCIe 4.0, SATA 6Gb/s, SD 3.0

Intel® Tiger Lake-UP3 Platform OS Support

Licensing Model	Operating System and Hypervisor	Distributor and Scalability Partnership
Commercial	Windows 10 IOT Enterprise (64-bit) LTSC RS5	Microsoft
	Ubuntu Linux	Canonical
	Redhat Linux	Redhat
	Wind River VxWorks RTOS	Wind River
	Real-Time System (Type 1 Hypervisor)	Real TIme Systems
Open Source	Linux LTS Kernel with Prempt RT Patch	Open Source Community: http://kernel.org Intel Open Source Community: http://01.org http://projectacrn.org http://1.org/projectceladon
	Virtualization: KVM (Type 2 Hypervisor), ACRN	
	Android Celadon	

Features of IEI Intel® Tiger Lake-UP3 Products

Thunderbolt™	2.5GbE LAN	PCI Express® 4.0
Supporting Thungerbolt with USB-C integrated ports, allowing a reduction of routing complexity and removing PCIe lane consumption from SoC or PCH.	Supporting TSN (Time Sensitive Networking), providing time synchronization with IT network and timeliness between systems.	Interconnect performance bandwidth double of the PCIe 3.0 specification achieving 16GT/s and compatibility with software and mechanical interfaces is preserved.

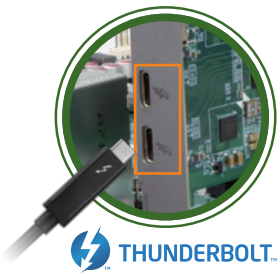

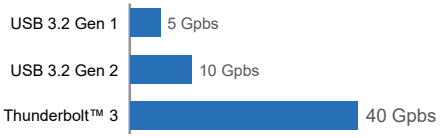

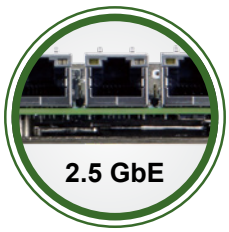



Controller IC:
Intel® I225LM / Intel® I225V



PCIe 3.0 and 4.0 Data Transfer Time

Faster and time-saving!

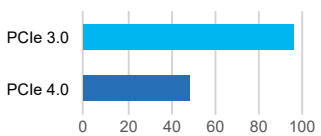

www.ieiworld.com

Intel® Elkhart Lake Platform

Intel® Elkhart Lake Platform Overview



Real-Time/Time Determinis

- Intel® Time Coordinated Computing, Time Sensitive Networking features
- Scalability and consolidation of temporally deterministic workloads

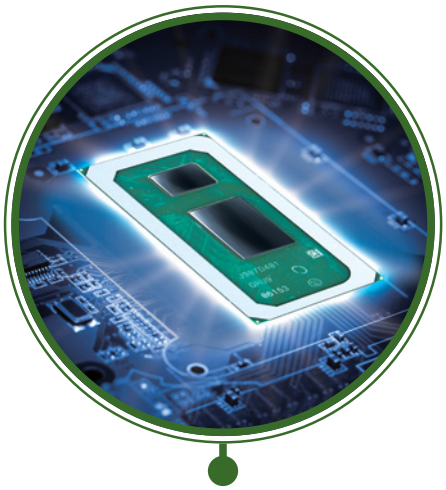

Safety, Security, Manageability

- First Intel product designed with functional safety capabilities. SIL2/Cat.3 PL d certified, SIL3/Cat.4 PLe capable
- In-Band and OOB manageability
- Intel® PTT, Intel® DAL technologies
- Intel® Boot Guard



Function+

- Intel® Programmable Services Engine
- Intel® UHD Graphics, media, and display supporting video encode/decode requirements
- Integrated Gigabit Ethernet (2.5GbE)
- Fully Integrated Voltage Regulator (FIVR)

Generational Comparison

	Apollo Lake-I	Elkhart Lake
Memory / ECC	1867 MHz DDR3L (max. 8 GB) 2400 MHz LPDDR4 (max. 8 GB)	LPDDR4 4267MT/s (max. 8GB/16GB @3200MT/s), DDR4 3200MT/s (max. 32GB with IBECC)
TDPs	6W-12W	4.5W-12W
Ethernet	-	3 x 2.5GbE TSN MACs
Storage and IO	2 SATA 6Gb/s, 6 USB 3.2 Gen 1 (1 dual role), eMMC 5.0	2 SATA 6Gb/s, 4 USB 3.2, 3 2.5GbE TSN MACs, 2 UFS 2.0, eMMC 5.1, 10 USB 2.0 (1 dual role), PWM, QEP, ADC, CAN, up to 60 GPIOs via Intel® Programmable Services Engine (40 timed GPIOs)
Max. Display Resolutions	4Kp60 on one display	Intel® UHD Graphics, 4Kp60 on three simultaneous displays
Power Mgmt	PMIC or Multiple Discrete Voltage Regulators (DVR)	Fully Integrated Voltage Regulators (FIVR)

Block Diagram

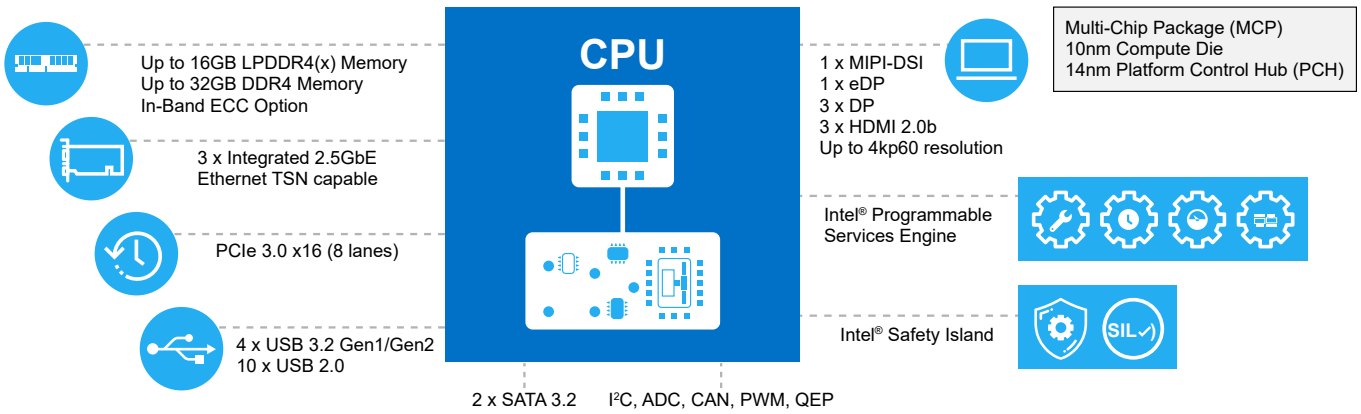

www.ieiworld.com

Intel® Elkhart Lake CPU Matrix

Brand	Processor No.	CPU Core Count	CPU HFM Freq (GHz)	CPU Burst Freq (GHz)	Memory Max Bandwidth/ Channel	Gfx Freq (MHz) Nominal/Turbo	Max. TDP (W)	Junction Temperature Range
Pentium®	N6415	4	1.2	3.0	51.2 (GB/s) / 4	350/800	6.5	0°C ~ 105°C
Pentium®	J6425	4	1.8	3.0	59.7 (GB/s) / 4	400/800	10	0°C ~ 105°C
Celeron®	N6211	2	1.2	3.0	51.2 (GB/s) / 4	250/750	6.5	0°C ~ 105°C
Celeron®	J6413	4	1.8	3.0	59.7 (GB/s) / 4	400/800	10	0°C ~ 105°C
ATom®	X6425E	4	1.8	3.0	59.7 (GB/s) / 4	500/750	12	-40°C ~ 105°C
ATom®	X6413E	4	1.5	3.0	51.2 (GB/s) / 4	500/750	9	-40°C ~ 105°C
ATom®	X6211E	2	1.2	3.0	51.2 (GB/s) / 4	350/750	6	-40°C ~ 105°C
ATom®	X6425RE	4	1.9	N/A	68.2 (GB/s) / 4	400/(N/A)	12	-40°C ~ 105°C
ATom®	X6414RE	4	1.5	N/A	51.2 (GB/s) / 4	400/(N/A)	9	-40°C ~ 105°C
ATom®	X6212RE	2	1.2	N/A	51.2 (GB/s) / 4	350/(N/A)	6	-40°C ~ 105°C
ATom®	X6427FE	4	1.9	N/A	68.2 (GB/s) / 4	400/(N/A)	12	-40°C ~ 105°C
ATom®	X6200FE	2	1.0	N/A	38.4 (GB/s) / 4	N/A	4.5	-40°C ~ 105°C

Intel® Elkhart Lake Platform OS Support

Category	Operating System (Targeted for Support)	Implementation	Distribution and Support
Microsoft	Windows 10 IoT Enterprise (64-bit)	Intel	Intel, Microsoft
Linux	Yocto Project BSP tool-based embedded Linux distribution (64-bit)	Intel	Yocto Project and ISV Partners
	Linux Distribution: Ubuntu (64-bit)	Canonical	Canonical
	Wind River Linux LTS distribution (64-bit)	Wind River	Wind River
Android	Android 10 (64-bit)	Intel	ISV Partners
RTOS	Wind River VxWorks 7	Wind River	Wind River

Features of IEI Elkhart Lake Products

Display Port	2.5GbE LAN	M.2
IEI provides products supporting Triple-mode DisplayPort output which can auto detect the plugged-in cable type and provide multiple options of display output through one single port.	IEI provides new products supporting TSN (Time Sensitive Networking), which delivers time synchronization with IT network and timeliness between systems.	IEI provides new products supporting Next Generation Form Factor (NGFF) expansion cards with different functions, such as SSD, WWAN and WLAN cards suitable for small devices.

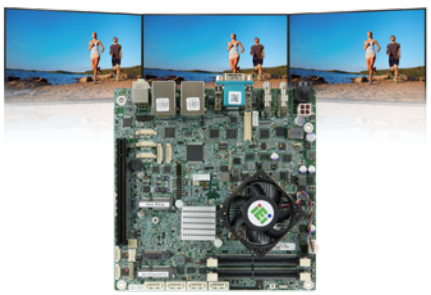

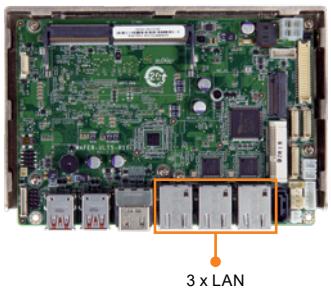

3 x LAN

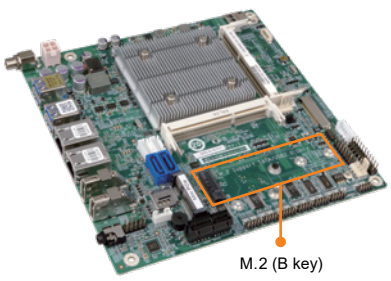

M.2 (B key)

www.ieiworld.com

Intel® Jasper Lake Platform

Improved Performance

- New Tremont core, 6W/10W TDP, 10nm CPU/14nm PCH MCP, 1.5M L2 + 4M L3 cache, FIVR, 35x24 package
- Up to 4 Cores

Faster Connections

- Integrated WiFi/BT with 802.11ax/ac support w/ Discrete option
- Integrated USB 3.1 Gen 2 for 2x the speed vs. Gen 1
- Up to 8 PCIe 3.0 lanes

Gen 11 Graphics

- Next Gen Graphics and Display with significantly better Graphics up to 32 EUs improved Perf and new features
- Integrated IPU, MIPI-CSI

Security & Manageability

- Integral Intel Security Engine HDCP2.2, Playready 3, Widevine, Microsoft VSM.

Intel® Atom™ Comparison



	Cedar Trail	Bay Trail	Braswell	Apollo Lake	Jasper Lake
Launch	Q1'12	Q4'13	Q1'15	Q4'16	Q4'20
Process	32nm	22nm	14nm	14nm	10nm
Processor Frequency & TDP	D2550: 2C, 1.86GHz/10W N2800: 2C, 1.86GHz/6.5W N2600: 2C, 1.6GHz/3.5W	J1900: 4C, 2 GHz/10W N2930: 4C, 1.83 GHz/7.5W N2807: 2C, 1.58 GHz/4.3W E3845: 4C, 1.91 GHz/10W E3827: 2C, 1.75 GHz/8W E3826: 2C, 1.46 GHz/7W E3825: 2C, 1.33 GHz/6W E3815: 1C, 1.46 GHz/5W	N3710: 4C, up to 2.56GHz/6W N3160: 4C, up to 2.24GHz/6W N3060: 2C, up to 2.48GHz/6W N3010: 2C, up to 2.24GHz/4W	N4200: 4C, up to 2.5GHz/6W N3350: 2C, up to 2.3GHz/6W x7-E3950: 4C, up to 2.0GHz/6.5W x5-E3940: 4C, up to 1.8GHz/9.5W x5-E3930: 2C, up to 1.8GHz/12W	N6005: 4C up to 3.30GHz/10W N5105: 4C up to 2.90GHz/10W N4505: 2C up to 2.90GHz/10W N6000: 4C up to 3.30GHz/6W N5100: 4C up to 2.80GHz/6W N4500: 2C up to 2.80GHz/6W
Chipset TDP	Intel® NM10: 1.5W	N/A	N/A	N/A	N/A
Memory	DDR3 1066 MHz for D2550/ N2800 (Max. 4GB) DDR3 800MHz for N2600 (Max. 2GB)	DDR3L 1333MHz for J1900/ N2930/E3845/E3827 (Max. 8GB) DDR3L 1333MHz for N2807 (Max. 4GB) DDR3L 1066MHz for E3826/ E3825/E3815 (Max. 8GB)	DDR3L 1600MHz (Max. 8GB)	DDR3L 1866 MHz (Max. 8GB)	DDR4 2933Mhz (Max. 16GB)
Graphics	2 Independent Displays DirectX9 , OpenGL 3.0 Gfx @ up to 640MHz (D2550/ N2800)	Gen 7 graphics 2 Independent Displays Gen 7 4 EUs DirectX11.1 , OpenGL 4.0 Gfx @ up to 854MHz (J1900/ N2930)	Gen 8 graphics 3 Independent Displays Gen 8 LP 16 EUs DirectX12 2, OpenGL 4.2 Gfx @ up to 700MHz (N3700)	Gen9 Low Power graphics 3 Independent Diplats Gen9 LP 18 EUs OpenGL* ES 3.0/3.0+, OpenCL* 1.2 Gfx@ up to 750 MHz (N4200)	Gen11 Graphics, 3 Independent Diplats Gen11 32 EUs OpenGL* ES 3.2/4.5, OpenCL* 1.2
Video Decode	MPEG2, h.264, VC-1/WMV9 Up to 1080p	MPEG4, h.264, VC-1/WMV9 VP8 up to 1080p	H.265/HEVC @ level 5, H.264 @ Level 5.2, MPEG2, MVC, VC-1, WMV9, JPEG, VP8	4K Codec Decode & Encode for HEVC, H.264, VP8	4K Codec Decode & Encode for HEVC, H.264, VP9
Storage & IO	SATA 3Gb/s, 8 USB 2.0	SATA 3Gb/s, 1 USB 3.2 Gen 1, 3 USB 2.0, eMMC 4.51	SATA 6Gb/s, 4 USB 3.2 Gen 1, 1 USB 2.0, eMMC 4.51	SATA 6Gb/s, 5 USB 3.2 Gen 1, 2 USB 2.0, eMMC 5.0	SATA 6Gb/s, 3 USB 3.2 Gen 1, 2 USB 3.2 Gen 2, 4 USB 2.0, eMMC 5.1

www.ieiworld.com

Block Diagram

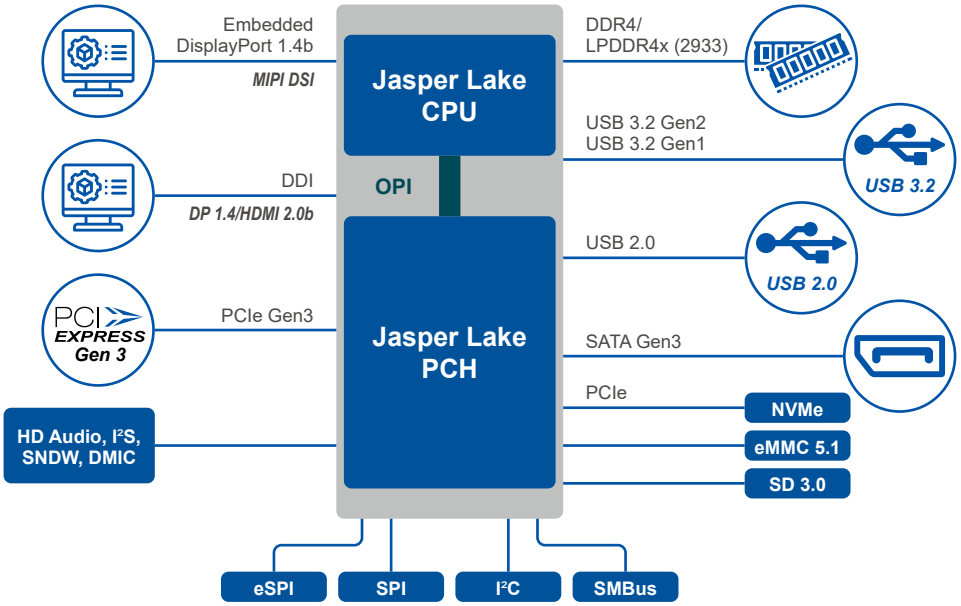

Features of IEI Jasper Lake Product

2.5GbE LANs

IEI provides products support triple 2.5 GbE LANs with i225V/LM which can provide a high-speed networks option for communication demand.

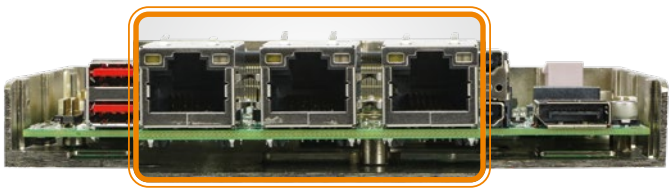

USB 3.2 Gen 2

IEI provides products support integrated USB 3.2 Gen 2 which is twice the speed more than USB 3.2 Gen 1.

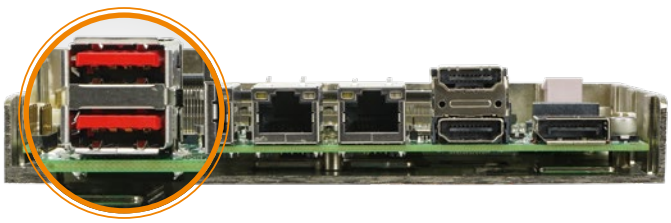

SPI TPM

IEI provides products support
Onboard TPM 2.0 a software management security solution for data protection and reliable passwords and digital certificates.

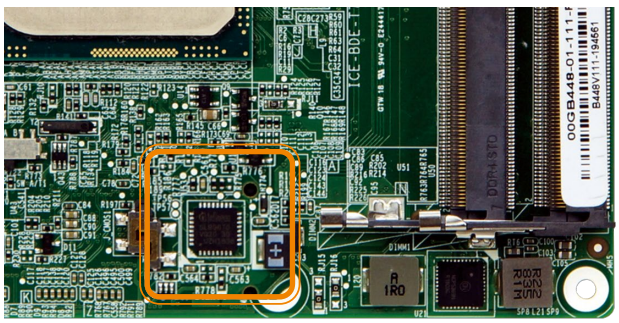

M.2

IEI provides new products supporting M.2 expansion cards in different types, such as SSD, WWAN and WLAN cards suitable for small devices.



www.ieiworld.com

IEI x NVIDIA
AI Product Overview

Source: https://www.nvidia.com/en-us/

ISV Application	Object Detection	ALPR	Video Search	Face Recognition	Heat Mapping
Ecosystem	Sensors	AI/System Software	Design Services		
Accelerated Modules	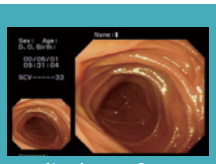 Medical AI Inference	 Artificial Intelligence	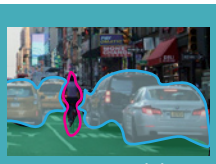 Computer Vision	 Accelerated Computing	
IEI Product	 HTB-210				
SDK/OS	Windows®10, Linux®				
AI Accelerator	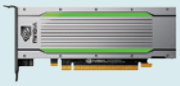 Tesla T4				

Initiate Your Own AI Journey with IEI Solutions

Image Classification
AlexNet, VGG16, GoogleNet, ResNet, MobileNet, etc.

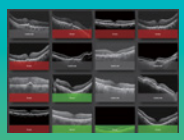


Object Detection
SSD, Yolo v1/v2/v3, R-FCN, RCNN, Faster RCNN, etc.

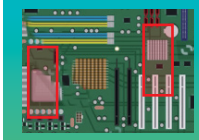
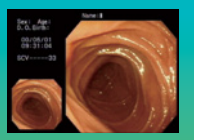

Image Segmentation
SegNet, U-Net, FCN, DeepLab v1/v2, etc.

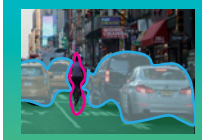
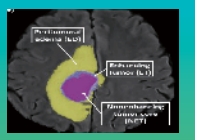

Face Detection / Recognition
MTCNN, DeepFace, Facenet, etc.

Video Classification
RNN, LSTM, etc.

Speech Recognition
DeepVoice, WaveNet, etc.

Frameworks
(Caffe, Caffe2, CNTK, MXNet, Neon, PyTorch, TensorFlow...)

Training Platform
· cuDNN
· cuML

Inference Platform
· TensorRT
· TRTIS

OS

www.ieiworld.com

IEI AI Edge Computing - Faster and Less Power

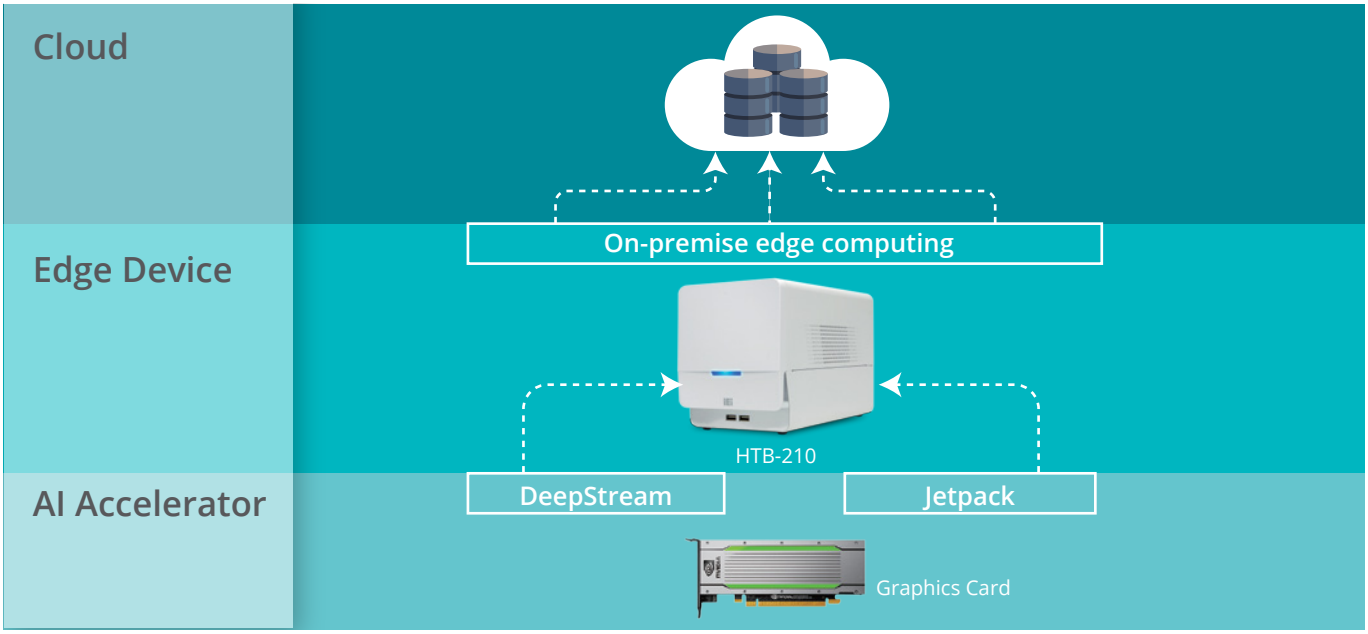

Deep Learning Inference Performance

IEI's AI edge systems are designed as a total solution for various applications and improving the performance and flexibility of medical imaging and industrial AI inference. With IEI's AI edge systems, our SI customers not only can design their deep learning software on the systems but also can market the system as a complete solution. This approach can simplify the workflow and processes of the system integration when launching the customized deep learning solution into the market.

Source: https://www.nvidia.com/en-us/

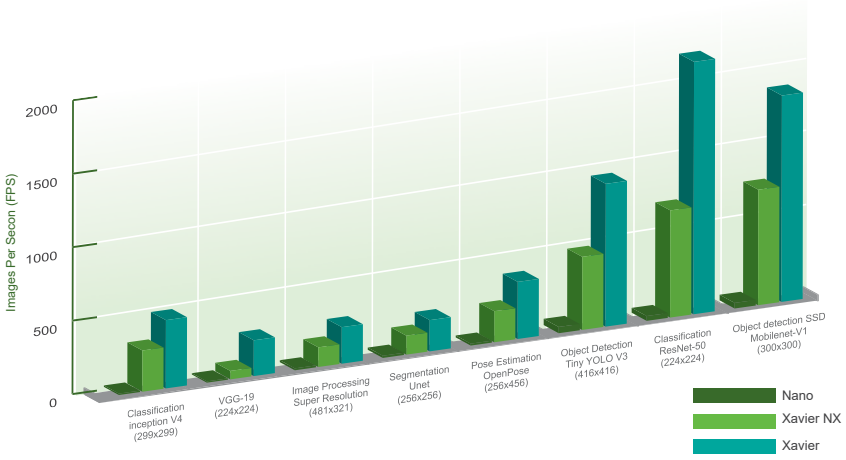

IEI Board Support Package (BSP) Service

We offer BSP services for our products. Our customers could easily download the utilities and software they need from our website.



https://download.ieiworld.com/

www.ieiworld.com

AI Google Coral TPU Overview & Products

As an industrial PC AI accelerator manufacturer, IEI keep provide excellent performance AI accelerator's option to fulfill different AI task. Google Coral edge TPU provide up to 4TOPS and power consumption is only 2 watt per TPU module.

Google edge TPU leverage well-developed Tensorflow Lite community, can fast implement the existing model zoo to your edge inference project, from image classification, object detection to image segmentation.

Edge TPU Coral

- Google Edge TPU ML accelerator: 4 TOPS peak performance (int8) / 2 TOPS per watt
- Integrated power management
- PCIe Gen2 x1 or USB 2.0 interface
- Surface-mounted (LGA) module
- Size: 15.0 x 10.0 x 1.5 mm
- Weight: 0.67 g
- Operating temp: -40°C~85°C
- RoHS compliant

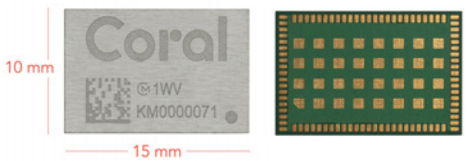

Source: https://coral.ai/docs/module/datasheet/

Mustang-T100-T5

IEI Mustang-T100-T5 leverage the power of Google Coral edge TPU, it integrates five Coral TPU module into one half-height, half-length, single slot PCIe card, and can provide up to 20 TOPS, is an idea compact PCIe accelerator for multiple AI tasks application.



Feature

- 5 x Google Edge TPU ML accelerator
- 20 TOPS peak performance (int8)
- Host interface PCIe Gen2 x 4
- Low-profile PCIe form factor
- Approximate 15W
- RoHS compliants

System Requirements

- Linux:
  64-bit version of Debian 10 or Ubuntu 16.04 (or newer)
  x86-64 or ARMv8 system architecture
- Windows:
  64-bit version of Windows 10
  x86-64 system architecture

Mustang-T100-T5 Block Diagram

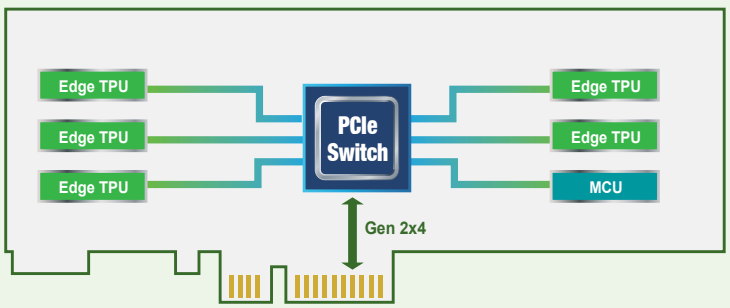

IEI provide series of system to support Mustang-T100-T5 accelerator such as TANK-870AI & FLEX-BX200AI.

www.ieiworld.com

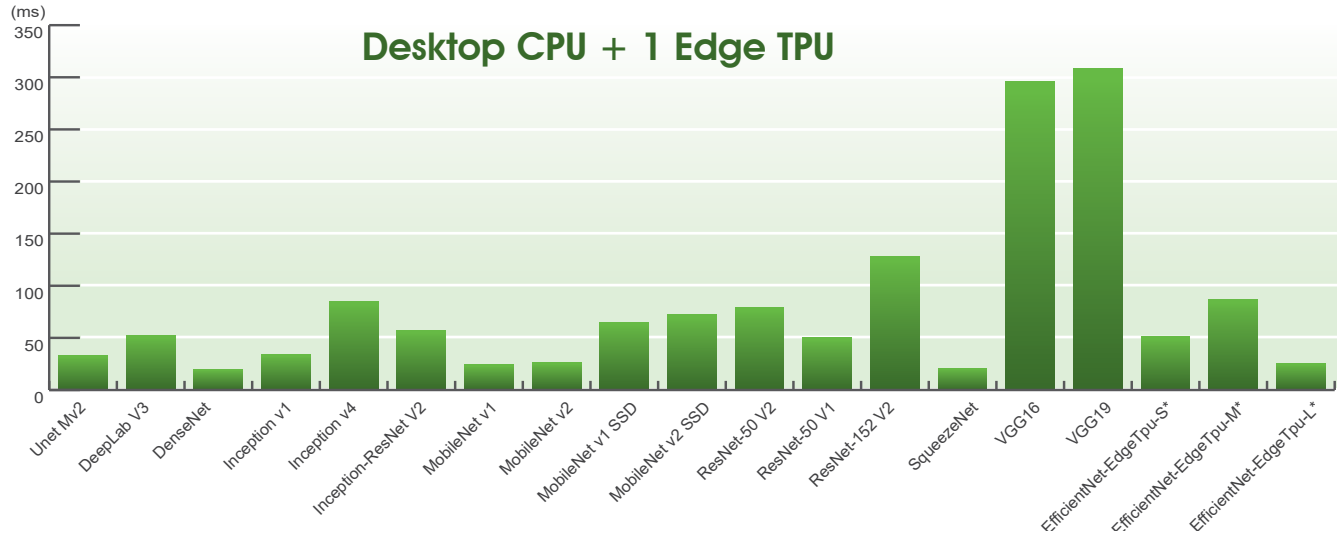

TensorFlow models on the Edge TPU - Coral

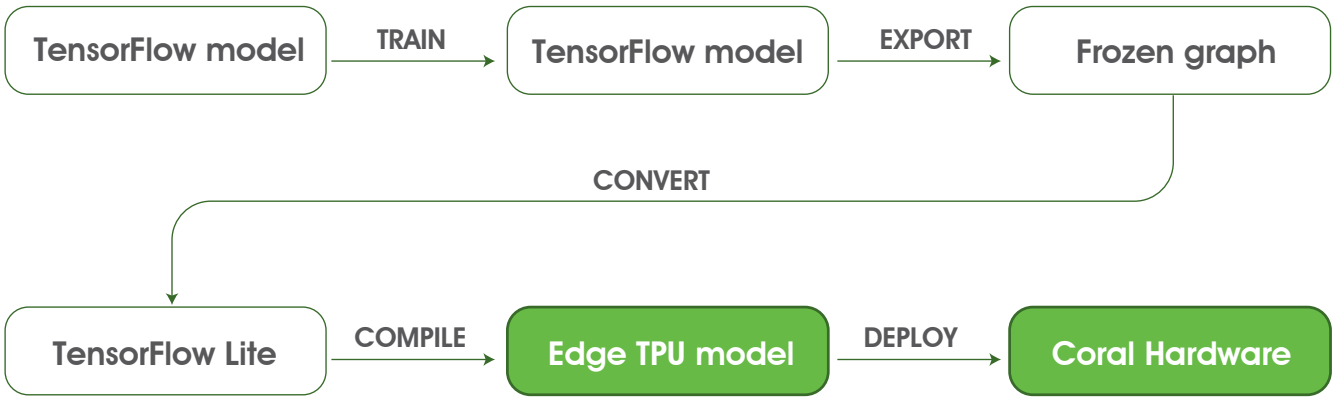

Solutions for on-device intelligence

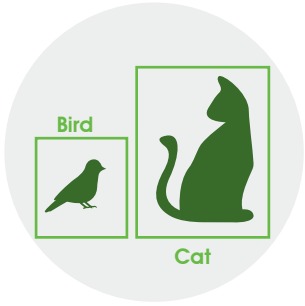

Object detection

Draw a square around the location of various recognized objects in an image



Pose estimation

Estimate the poses of people in an image by identifying various body joints.



Image segmentation

Identify various objects in an image and their location on a pixel-by-pixel basis.



Key phrase detection

Listen to audio samples and quickly recognize known words and phrases.

Source: https://coral.ai/

www.ieiworld.com

IEI Accelerators with Intel® Solution



Interface	FPGA	MX VPU x8	MX VPU x4	MX VPU x2	MX VPU x1	KMB VPU x3	KMB VPU x1
PCIe	Mustang-F100-A10 Intel® Arria10 FPGA	Mustang-V100-MX8 Myriad X	Mustang-V100-MX4 Myriad X			Mustang-V200-KB3 KeemBay	
MPCIE				Mustang-MPCIE-MX2			
M.2				Mustang-M2BM-MX2, BM Key	Mustang-M2AE-MX1, AE Key		Mustang-M2BM-KB1, M key

Intel FPGA

Intel® Arria® 10 FPGA GX in a small form factor, PCI Express* (PCIe*) acceleration card that is supported natively by the OpenVINO™ toolkit to deliver low-latency video inference for edge and, cloud deployment. It has been designed to add acceleration capabilities to PCIe* host platforms and has been validated on the IEI TANK-870AI compact IPC for those with space and power constraints.

Intel VPU

Intel® Movidius™ VPUs enable demanding computer vision and edge AI workloads with efficiency. By coupling highly parallel programmable compute with workload-specific hardware acceleration in a unique architecture that minimizes data movement, Movidius VPUs achieve a balance of power efficiency and compute performance. VPU technology enables intelligent cameras, edge servers and AI appliances with deep neural network and computer vision based applications in areas such as visual retail, security and safety, and industrial automation.

VPU Comparison		
SoC code name	**Gen2 VPU Myriad X**	**Gen3 VPU Keem Bay**
Embedded CPU	NA	4*Cortex ARM A53 1.5GHz
Functions	Inference	decode / Inference / encode
Precision	FP16	INT8
Performance	1 TOPS per chip	7.1 TOPS per chip
Structure	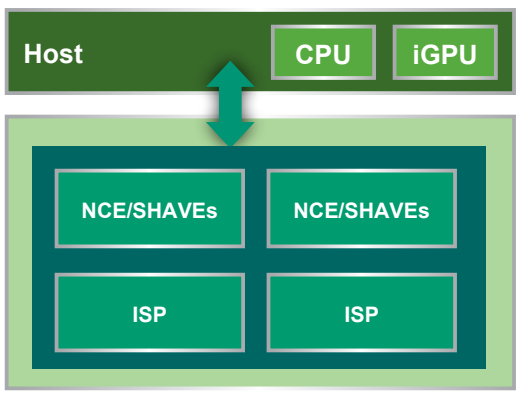	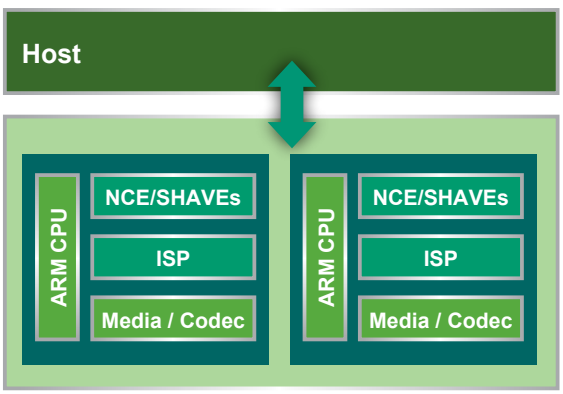

www.ieiworld.com

Mustang Accelerate Card Family

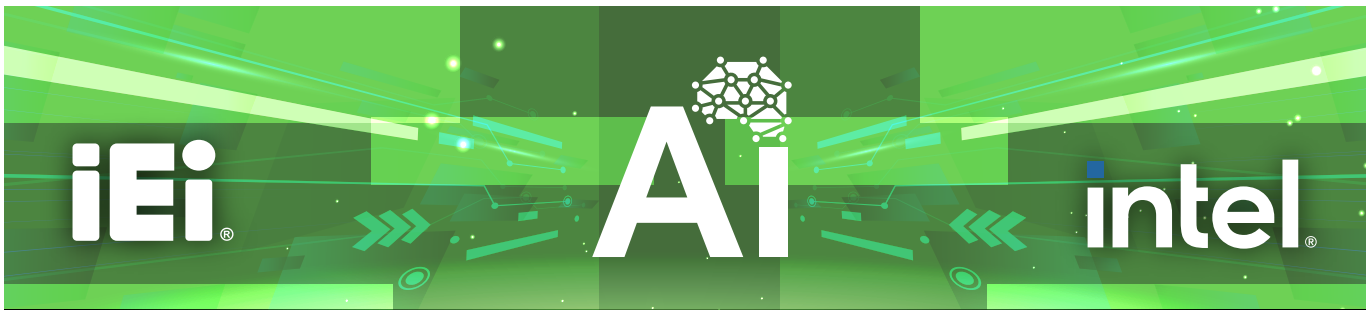

Preliminary



Mustang-V200-KB3

Three Intel® Movidius™ Keem Bay™

Preliminary



Mustang-M2BM-KB1

Intel® Movidius™ Keem Bay™



Mustang-F100-A10

Intel® Arria® 10 GX1150 FPGA



Mustang-V100-MX8

Eight Intel® Movidius™ Myriad™ X MA2485 VPU



Mustang-V100-MX4

Four Intel® Movidius™ Myriad™ X MA2485 VPU

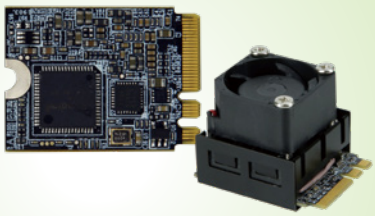

Mustang-M2AE-MX1

Intel® Movidius™ Myriad™ X MA2485 VPU

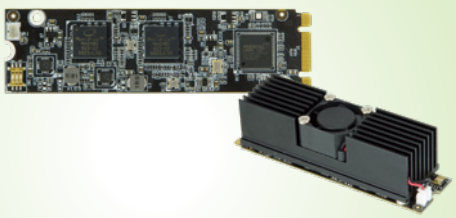

Mustang-M2BM-MX2

Two Intel® Movidius™ Myriad™ X MA2485 VPU

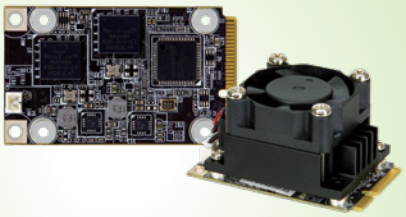

Mustang-MPCIE-MX2

Two Intel® Movidius™ Myriad™ X MA2485 VPU

www.ieiworld.com

Cortex™-A53 on Freescale™ i.MX 8M Series

i.MX 8M Family of Applications Processors

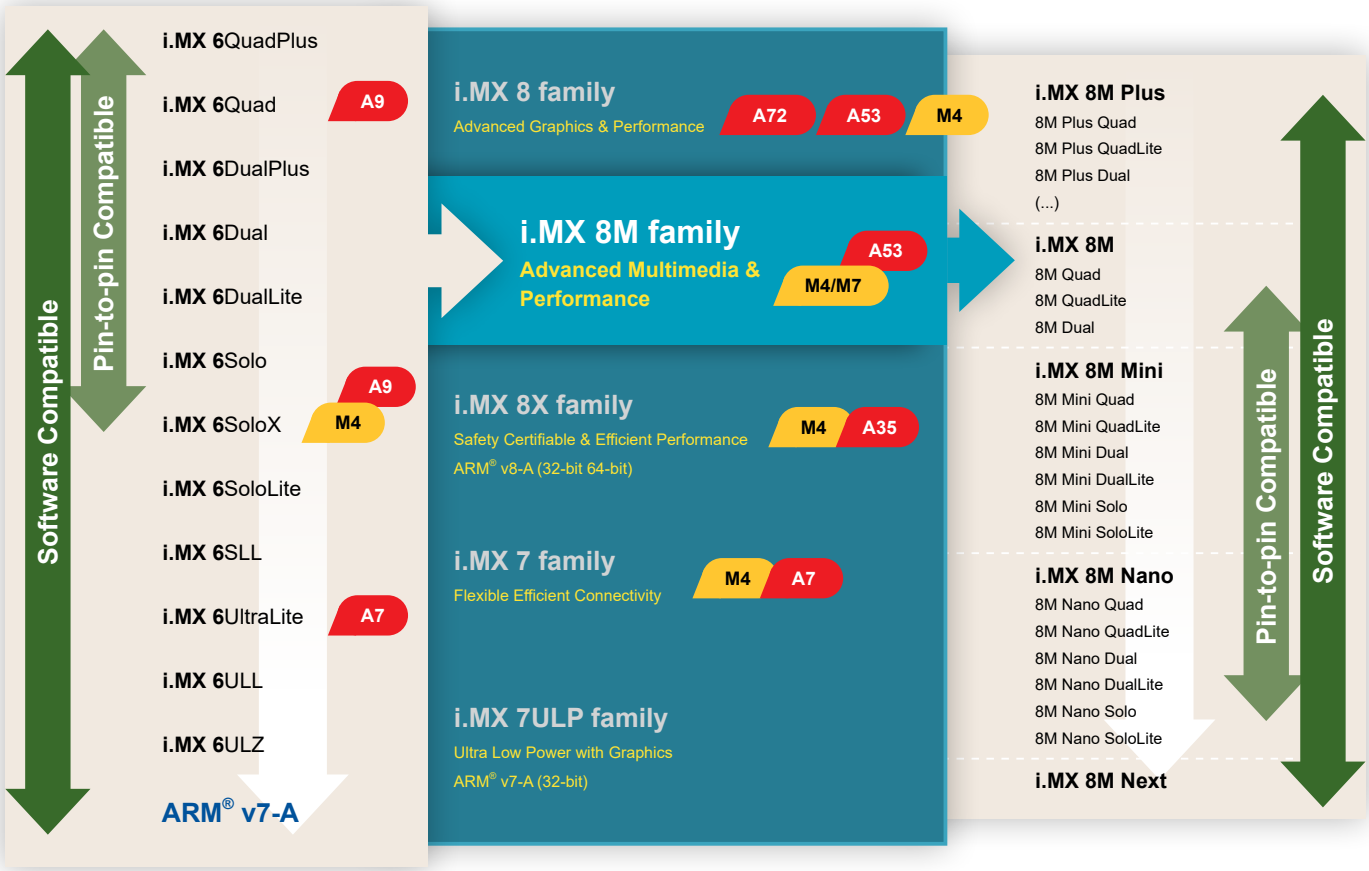

Cortex™-A53 MPCore

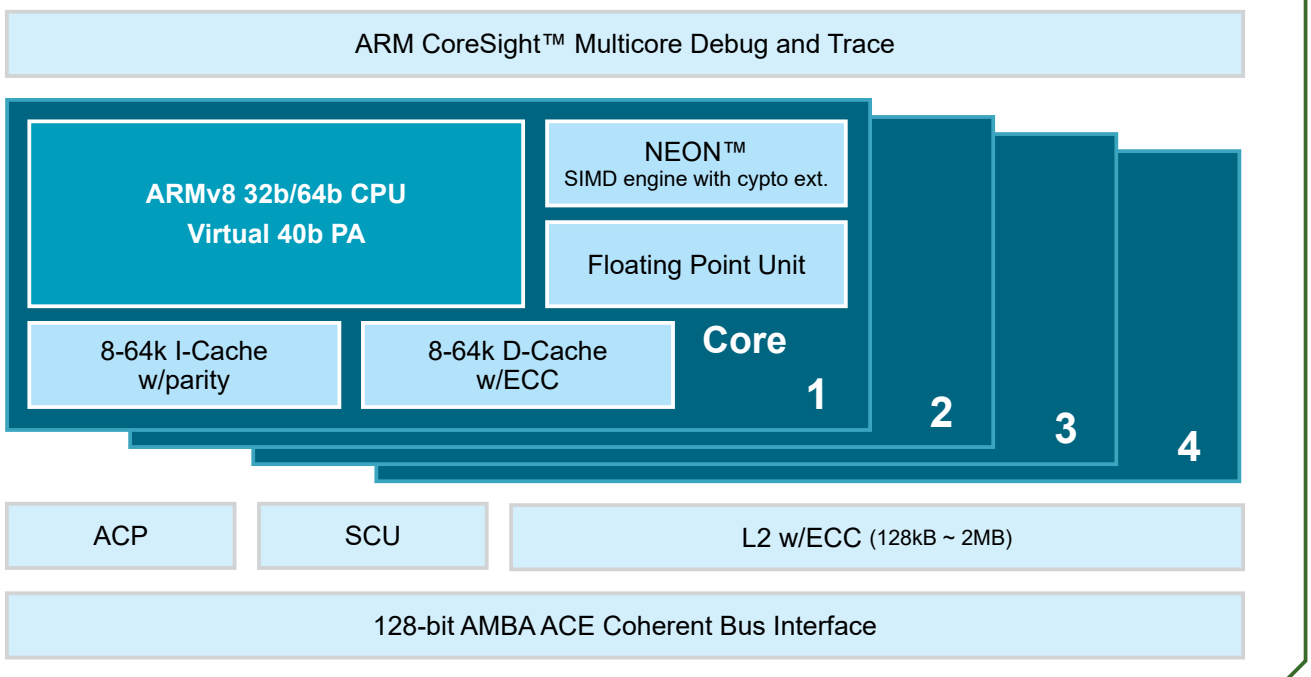

www.ieiworld.com

i.MX 8M Series: Scalable Solutions for the Broad Market

i.MX 8M Quad Family	i.MX 8M Mini Family	i.MX 8M Nano Family	i.MX 8M Plus Family
A53, M4, GPU	A53, M4, GPU	A53, M7, GPU	A53, M4, NPU, DSP, GPU
Available NOW	Available NOW	Available NOW	4Q 2020
i.MX 8M Quad i.MX 8M Dual	i.MX 8M Mini Quad/Dual/Solo	i.MX 8M Nano Quad/Dual/Solo	i.MX 8M Plus Quad/Dual
i.MX 8M QuadLite	i.MX 8M Mini QuadLite/DualLite/ SoloLite		i.MX 8M Plus Quad/Lite
Pin Compatible	Pin Compatible 14x14 Package		Pin Compatible
Advanced Audio, Voice, 4K Video, HDR, 3D GPU w/ OpenCL, Broad Connectivity	Advanced Audio, Voice, HD Video (2-way), 3D GPU, Power Efficient 14FF, 2 Package Options	Low Cost Audio, Voice, 3D GPU w/ OpenCL, Power Efficient 14FF, 2 Package Options	ML, Vision, Industrial IoT, Advanced Multimedia, Voice, HD Video (2-way), 3D GPU, Power Efficient 14FF, 2 Package Options

Software Compatible (including GPU Tools)

Scalable series of FOUR Arm V8 64-bit (/32-bit) based SoC Families

Machine Learning Acceleration at the Edge

AIOM-X8MM

- Computer on Module (32mm x 50 mm)
- i.MX8M Mini SoC

AIOM-X8MN

- Computer on Module (32mm x 50 mm)
- i.MX8M Nano SoC

AIOM-X8MP

- Computer on Module (32mm x 50 mm)
- i.MX8M Plus SoC

IEI's i.MX 8M computer on module series integrates with i.MX 8M mini, i.MX8M and i.MX8M plus SoCs.
The i.MX 8M Plus family of processors is based on ARM® Cortex®-A53 and Cortex-M7 cores and delivers a new level of:

- Machine Learning and Vision System
- Advanced Multimedia
- Industrial Networking and High Reliability.

It is well suited for applications as:

- Smart Home, Building, Retail and City
- Smart Factory and Industry IoT

Coming Soon!

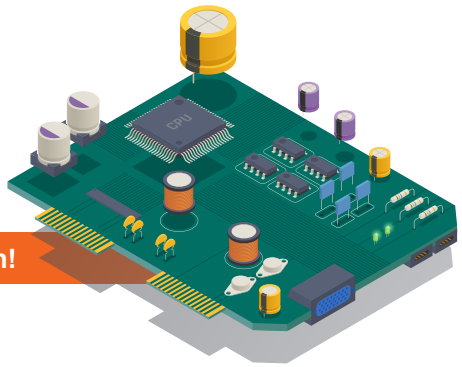









www.ieiworld.com

OS Support List I (Windows/Linux)

System Chipset		CE 6.0	Embedded Compact 7 CE 7.0	Embedded Compact 2013	2000	XP Pro	7	8.1	10 32 bit	10 64 bit	Server 2003	Server 2008	Server 2012	Server 2016	Server 2019	Linux Kernel
Comet Lake S	Intel® W480E									V					V	Linux Kernel 5.4
	Intel® Q470E									V						Linux Kernel 5.4
	Intel® H420E									V						Linux Kernel 5.4
	Intel® H410									V						Linux Kernel 5.4
Intel® Atom™ C3000 R										V			V	V		Linux Kernel 4.4
Intel® Atom™ C3000								V		V			V	V		Linux Kernel 4.4
Intel® Tiger Lake UP3										V						Linux Kernel 5.4
Coffee lake R	Intel® C246									V			V	V	V	Linux Kernel 4.19
	Intel® Q370									V						Linux Kernel 4.19
	Intel® H310									V						Linux Kernel 4.19
	Intel® CM246									V						Linux Kernel 4.19
	Intel® QM370									V						Linux Kernel 4.19
	Intel® HM370									V						Linux Kernel 4.19
Intel® whiskey lake ULT								V		V		V	V	V	V	Linux Kernel 4.19
Coffee Lake	Intel® C246									V			V	V	V	Linux Kernel 4.14
	Intel® Q370									V						Linux Kernel 4.14
	Intel® H310									V						Linux Kernel 4.14
	Intel® CM246									V						Linux Kernel 4.14
	Intel® QM370									V						Linux Kernel 4.14
	Intel® HM370									V						Linux Kernel 4.14
Intel® Broadwell-DE							V	V		V		V	V	V		Linux Kernel 3.19
Kaby Lake	Intel® C236									V		V	V	V		Linux Kernel 4.14
	Intel® Q170									V						Linux Kernel 4.14
	Intel® H110									V						Linux Kernel 4.14
	Intel® CM238									V						Linux Kernel 4.14
	Intel® QM175									V						Linux Kernel 4.14
	Intel® HM175									V						Linux Kernel 4.14
	Intel® Kaby Lake ULT									V						Linux Kernel 4.14
Skylake	Intel® C236						V	V		V		V	V	V		Linux Kernel 4.0 (3.2)
	Intel® Q170						V	V		V						Linux Kernel 4.0 (3.2)
	Intel® H110						V	V		V						Linux Kernel 4.0 (3.2)
	Intel® CM236						V	V		V						Linux Kernel 4.0 (3.2)
	Intel® QM170						V	V		V						Linux Kernel 4.0 (3.2)
	Intel® HM170						V	V		V						Linux Kernel 4.0 (3.2)
	Intel® Skylake ULT						V	V		V						Linux Kernel 4.0 (3.2)
	Intel® Broadwell ULT						V	V		V						Linux Kernel 3.19

www.ieiworld.com

OS Support List II (Windows/Linux)

System Chipset		CE 6.0	Embedded Compact 7 CE 7.0	Embedded Compact 2013	2000	XP Pro	7	8.1	10 32 bit	10 64 bit	Server 2003	Server 2008	Server 2012	Server 2016	Server 2019	Linux Kernel
Haswell	Intel® C226					V	V	V		V	V	V	V			Linux Kernel 3.x
	Intel® Q87					V	V	V		V						Linux Kernel 3.x
	Intel® H81					V	V	V		V						Linux Kernel 3.x
	Intel® QM87					V	V	V		V						Linux Kernel 3.x
	Intel® Haswell ULT						V	V		V						Linux Kernel 2.6.3x
Ivy Bridge	Intel® C216					V	V	V		V	V	V	V			Linux Kernel 2.6.3x
	Intel® Q77					V	V	V		V						Linux Kernel 2.6.3x
	Intel® QM77					V	V	V		V						Linux Kernel 2.6.3x
Sandy Bridge	Intel® C206					V	V	V			V	V	V			Linux Kernel 2.6.3x
	Intel® Q67	V				V	V	V								Linux Kernel 2.6.3x
	Intel® B65	V				V	V	V								Linux Kernel 2.6.3x
	Intel® H61	V				V	V	V								Linux Kernel 2.6.3x
	Intel® QM67	V				V	V	V								Linux Kernel 2.6.3x
	Intel® HM65	V				V	V	V								Linux Kernel 2.6.3x
Intel® Legacy	Intel® Q57					V	V									Linux Kernel 2.6.2x
	Intel® QM57					V	V									Linux Kernel 2.6.2x
	Intel® HM55					V	V									Linux Kernel 2.6.2x
	Intel® Apollo Lake N4000/E3900									V						Linux Yocto Project 4.1
Intel® Atom™	Intel® Braswell N3000						V	V	V	V						Linux Kernel 3.14 Android 5.0
	Intel® Bay Trail J1900/N2930/ N2807/E3800		V	V			V	V	V	V						Linux Kernel 3.12 Andriod 4.2 (32 bit) Android 4.4 (64 bit)
	Intel® D2550/ N2600/N2800+ NM10					V	V									Linux Kernel 2.6.35
	Intel® D2550/ N2600/N2800 + ICH10R					V	V									Linux Kernel 2.6.35
	Intel® D525/D425/ N455/N425 + ICH8M	V				V	V									Linux Kernel 2.6.2x
AMD®	AMD® V1000-series (Ryzen Embedded) SoC									V						Linux Kernel 4.14
	AMD® R1000-series (Ryzen Embedded) SoC									V						Linux Kernel 4.14
	AMD® R-series (MERLIN FALCON) SoC						V	V		V						Linux Kernel 3.13
	AMD® G-series (eKABINI) SoC	V	V	V		V	V	V		V						Linux Kernel 3.x
	AMD® Geode LX800 + CS5536					V										Linux Kernel 2.6.18

www.ieiworld.com

Intel® CPU and Chipset Matrix Table

Microserver D1500 family CPU List

Supported Sockets	Brand	Process	Cores/ Threads	Processor Number	Processor Base Frequency	Cache	TDP	Processor Graphics	Graphics Base Frequency	Memory Types	Chipset
FCBGA1667	Xeon® E3	22nm Broadwell	16/32	D-1577	1.30 GHz	24 MB	45 W	None	None	DDR4-2133, DDR3L-1600	-
			16/32	D-1571	1.30 GHz	24 MB	45 W				
			12/24	D-1567	2.10 GHz	18 MB	65 W				
			12/24	D-1559	1.50 GHz	18 MB	45 W				
			12/24	D-1557	1.50 GHz	18 MB	45 W				
			8/16	D-1548	2.00 GHz	12 MB	45 W				
			8/16	D-1541	2.10 GHz	12 MB	45 W				
			8/16	D-1540	2.00 GHz	12 MB	45 W			DDR4-2133	
			8/16	D-1539	1.60 GHz	12 MB	35 W			DDR4-2133, DDR3L-1600	
			8/16	D-1537	1.70 GHz	12 MB	35 W				
			6/12	D-1531	2.20 GHz	9 MB	45 W				
			4/8	D-1529	1.30 GHz	6 MB	20 W				
			6/12	D-1528	1.90 GHz	9 MB	35 W				
			4/8	D-1527	2.20 GHz	6 MB	35 W				
			4/8	D-1521	2.40 GHz	6 MB	45 W				
			4/8	D-1520	2.20 GHz	6 MB	45 W			DDR4-2133	
			4/8	D-1518	2.20 GHz	6 MB	35 W			DDR4-2133, DDR3L-1600	
	Pentium®		4/8	D1519	1.50 GHz	6 MB	25 W				
			4/8	D1517	1.60 GHz	6 MB	25 W				
			2/2	D1509	1.50 GHz	3 MB	19 W				
			2/4	D1508	2.20 GHz	3 MB	25 W				
			2/2	D1507	1.20 GHz	3 MB	20 W				

Denverton Atom® C3000 Family CPU List

Supported Sockets	Brand	Process	Cores/ Threads	Processor Number	Processor Base Frequency	Cache	TDP	Processor Graphics	Graphics Base Frequency	Memory Types	Chipset
FCBGA1310	Atom®	14nm Denverton	16/16	C3958	2.0GHz	16MB	31W	None	None	DDR4 2400	None
			12/12	C3858	2.0GHz	12MB	25W	None	None		
			8/8	C3758	2.2GHz	16MB	25W	None	None		
			4/4	C3558	2.2GHz	8MB	16W	None	None	DDR4 2133	
			4/4	C3538	2.1GHz	8MB	15W	None	None		
			2/2	C3338	1.5GHz	4MB	8.5W	None	None	DDR4 1866	
			2/2	C3336	1.5GHz	4MB	11W	None	None		
			8/8	C3758R	2.4GHz	16MB	26W	None	None	DDR4 2400	
			4/4	C3558R	2.4GHz	8MB	17W	None	None		
			4/4	C3436L	1.3GHz	8MB	10.75W	None	None	DDR4 1866	
			2/2	C3338R	1.8GHz	4MB	10.5W	None	None		

Workstation Xeon® E3/E/W Series CPU List

Supported Sockets	Brand	Process	Cores/ Threads	Processor Number	Processor Base Frequency	Cache	TDP	Processor Graphics	Graphics Base Frequency	Memory Types	Chipset
FCLGA2066	Xeon® W	14nm Cascade Lake	18/36	W-2295	3.00 GHz	24.75 MB	165 W	None	None	DDR4 2933	C422
			14/28	W-2275	3.30GHz	19.25 MB	165 W	None	None		
			12/24	W-2265	3.50 GHz	19.25 MB	165 W	None	None		
			10/20	W-2255	3.70 GHz	19.25 MB	165 W	None	None		
			8/16	W-2245	3.90 GHz	16.5 MB	155 W	None	None		
			6/12	W-2235	3.80 GHz	8.25 MB	130W	None	None		
			4/8	W-2225	4.10 GHz	8.25 MB	105W	None	None		
			4/8	W-2223	3.60 GHz	8.25 MB	120W	None	None	DDR4 2666	

Yellow means long-term support

www.ieiworld.com

Workstation Xeon® E3/E/W Series CPU List

Supported Sockets	Brand	Process	Cores/ Threads	Processor Number	Processor Base Frequency	Cache	TDP	Processor Graphics	Graphics Base Frequency	Memory Types	Chipset
FCLGA3647	Xeon® W	14nm Cascade Lake	28/56	W-3275	2.50 GHz	38.5 MB	205W	None	None	DDR4 2933	C621
			24/48	W-3265M	2.70 GHz	33 MB	205W	None	None		
			24/48	W-3265	2.70GHz	33MB	205W	None	None		
			16/32	W-3245M	3.20 GHz	22MB	205W	None	None		
			16/32	W-3245	3.20 GHz	22 MB	205W	None	None		
			12/24	W-3235	3.30 GHz	19.25 MB	180W	None	None		C422
			8/16	W-3225	3.70 GHz	16.5 MB	160W	None	None	DDR4-2666	C621
			8/16	W-3223	3.50 GHz	16.5 MB	160W	None	None		
FCLGA1151	Xeon® E	14nm Coffee lake	6/12	E-2186G	3.80 GHz	12MB	95W	Intel® UHD Graphics P630	350 MHz	DDR4-2666	C246/ C242
			6/12	E-2176G	3.70 GHz	12MB	80W				
			4/8	E-2174G	3.80 GHz	8MB	71W				
			6/12	E-2146G	3.50 GHz	12MB	80W				
			4/8	E-2144G	3.60 GHz	8MB	71W				
			6/12	E-2136	3.30 GHz	12MB	80W	NA	NA		
			4/8	E-2134	3.50 GHz	8MB	71W	NA	NA		
			6/6	E-2126G	3.30 GHz	12MB	80W	Intel® UHD Graphics P630	350 MHz		
			4/4	E-2124	3.30 GHz	8MB	71W	NA	NA		
			4/4	E-2124G	3.40 GHz	8MB	71W	Intel® UHD Graphics P630	350 MHz		
FCLGA1151	Xeon® E3	14nm Kaby Lake	4/8	E3-1285 V6	4.1GHz	8 MB	79W	Intel® HD Graphics P630	350 MHz	DDR4-2400, DDR3L-1866	C236
			4/8	E3-1280 V6	3.9GHz	8 MB	72W	None	None		
			4/8	E3-1275 V6	3.8GHz	8 MB	73W	Intel® HD Graphics P630	350 MHz		
			4/8	E3-1270 V6	3.8GHz	8 MB	72W	None	None		
			4/8	E3-1245 V6	3.7GHz	8 MB	73W	Intel® HD Graphics P630	350 MHz		
			4/8	E3-1240 V6	3.7GHz	8 MB	72W	None	None		
			4/8	E3-1230 V6	3.5GHz	8 MB	72W	None	None		
			4/4	E3-1225 V6	3.3GHZ	8 MB	73W	Intel® HD Graphics P630	350 MHz		
			4/4	E3-1220 V6	3.0GHz	8 MB	72W	None	None		
FCLGA2066	Xeon® W	14nm Skylake	4/4	W-2123	3.60 GHz	8.25MB	120W	None	None	DDR4-2666 ECC R-DIMM / LR-DIMM	C422
			4/4	W-2125	4.00 GHz	8.25MB	120W	None	None		
			6/12	W-2133	3.60 GHz	8.25MB	140W	None	None		
			6/12	W-2135	3.70 GHz	8.25MB	140W	None	None		
			8/16	W-2145	3.70 GHz	11MB	140W	None	None		
			10/20	W-2155	3.30 GHz	13.75MB	140W	None	None		
			14/28	W-2175	2.50 GHz	19MB	140W	None	None		
			18/36	W-2195	2.30 GHz	24.75MB	140W	None	None		
FCLGA1151	Xeon® E3	14nm Skylake	4/8	E3-1515MV5	2.80 GHz	8 MB	45 W	Intel® Iris™ Pro Graphics P580	350 MHz	DDR4-2133, LPDDR3-1866, DDR3L-1600	C236
			4/8	E3-1505MV5	2.80 GHz	8 MB	45 W	Intel® HD Graphics P530			
			4/8	E3-1578LV5	2.00 GHz	8 MB	45 W	Intel® Iris™ Pro Graphics P580	700 MHz	DDR3L, DDR4 2133MHz at 1.2V	
			4/8	E3-1558LV5	1.90 GHz	8 MB	45 W	Intel® Iris™ Pro Graphics P555	650 MHz		
			4/8	E3-1505LV5	2.00 GHz	8 MB	25 W	Intel® HD Graphics P530	350 MHz	DDR4-2133, LPDDR3-1866, DDR3L-1600	
			4/8	E3-1268LV5	2.40 GHz	8 MB	35 W			DDR4-1866/2133, DDR3L-1333/1600@1.35V	
			4/8	E3-1585V5	3.50 GHz	8 MB	65 W	Intel® Iris™ Pro Graphics P580		DDR3L, LPDDR3 1600MHz, DDR4 2133MHz at 1.2V	
			4/8	E3-1585LV5	3.00 GHz	8 MB	45 W				
			4/8	E3-1565LV5	2.50 GHz	8 MB	35 W				

Yellow means long-term support

www.ieiworld.com

Workstation Xeon® E3/E/W Series CPU List

Supported Sockets	Brand	Process	Cores/ Threads	Processor Number	Processor Base Frequency	Cache	TDP	Processor Graphics	Graphics Base Frequency	Memory Types	Chipset
FCLGA1151	Xeon® E3	14nm Skylake	4/8	E3-1280V5	3.70 GHz	8 MB	80 W	None	None	DDR4-1866/2133, DDR3L-1333/1600@1.35V	C236
			4/8	E3-1275V5	3.60 GHz	8 MB	80 W	Intel® HD Graphics P530	400 MHz		
			4/8	E3-1270V5	3.60 GHz	8 MB	80 W	None	None		
			4/8	E3-1260LV5	2.90 GHz	8 MB	45 W				
			4/8	E3-1245V5	3.50 GHz	8 MB	80 W	Intel® HD Graphics P530	400 MHz		
			4/8	E3-1240LV5	2.10 GHz	8 MB	25 W	None	None		
			4/8	E3-1240V5	3.50 GHz	8 MB	80 W				
			4/4	E3-1235LV5	2.00 GHz	8 MB	25 W	Intel® HD Graphics P530	400 MHz		
			4/8	E3-1230V5	3.40 GHz	8 MB	80 W	None	None		
			4/4	E3-1225V5	3.30 GHz	8 MB	80 W	Intel® HD Graphics P530	400 MHz		
			4/4	E3-1220V5	3.00 GHz	8 MB	80 W	None	None		
FCLGA1150	Xeon® E3	22nm Haswell	4/4	E3-1220 v3	3.1 GHz	8 MB	80 W	None	-	DDR3 and DDR3L 1333/1600 at 1.5V	C226
			2/4	E3-1220LV3	1.1 GHz	4 MB	13 W		-	DDR3 1333/1600	
			4/4	E3-1225V3	3.2 GHz	8 MB	84 W	Intel® HD Graphics P4600	350 MHz	DDR3 and DDR3L 1333/1600 at 1.5V	
			4/4	E3-1226V3	3.3 GHz	8 MB	84 W				
			4/8	E3-1230 v3	3.3 GHz	8 MB	80 W	None	-		
			4/8	E3-1230Lv3	1.8 GHz	8 MB	25 W		-		
			4/8	E3-1231V3	3.4 GHz	8 MB	80 W		-		
			4/8	E3-1240 v3	3.4 GHz	8 MB	80 W		-		
			4/8	E3-1240LV3	2 GHz	8 MB	25 W		-		
			4/8	E3-1241V3	3.5 GHz	8 MB	80 W		-		
			4/8	E3-1245 v3	3.4 GHz	8 MB	84 W	Intel® HD Graphics P4600	350 MHz		
			4/8	E3-1246V3	3.5 GHz	8 MB	84 W				
			4/8	E3-1265Lv3	2.5 GHz	8 MB	45 W	Intel® HD Graphics			
			4/8	E3-1268LV3	2.3 GHz	8 MB	45 W	Intel® HD Graphics 4600		DDR3 1333/1600	
			4/8	E3-1270 v3	3.5 GHz	8 MB	80 W	None	-	DDR3 and DDR3L 1333/1600 at 1.5V	
			4/8	E3-1271V3	3.6 GHz	8 MB	80 W		-		
			4/8	E3-1275 v3	3.5 GHz	8 MB	84 W	Intel® HD Graphics P4600	350 MHz		
			4/8	E3-1275LV3	2.7 GHz	8 MB	45 W	Intel® HD Graphics			
			4/8	E3-1276V3	3.6 GHz	8 MB	84 W	Intel® HD Graphics P4600			
			4/8	E3-1280 v3	3.6 GHz	8 MB	82 W	None	-		
			4/8	E3-1281V3	3.7 GHz	8 MB	82 W	None	-		
			4/8	E3-1285 v3	3.6 GHz	8 MB	84 W	Intel® HD Graphics P4700	350 MHz		
			4/8	E3-1285Lv3	3.1 GHz	8 MB	65 W				
			4/8	E3-1286V3	3.7 GHz	8 MB	84 W				
			4/8	E3-1286LV3	3.2 GHz	8 MB	65 W				
LGA1155	Xeon® E3	22nm Ivy Bridge	4/8	E3-1290V2	3.7 GHz	8 MB	87 W	-	-	DDR3-1333/1600	C206/ C21
			4/8	E3-1280V2	3.6 GHz	8 MB	69 W	-	-		
			4/8	E3-1275V2	3.5 GHz	8 MB	77 W	-	1.25 GHz		
			4/8	E3-1270V2	3.5 GHz	8 MB	69 W	-	-		
			4/8	E3-1265LV2	2.5 GHz	8 MB	45 W	-	1.15 GHz		
			4/8	E3-1245V2	3.4 GHz	8 MB	77 W	-	1.25 GHz		
			4/8	E3-1240V2	3.4 GHz	8 MB	69 W	-	-		
			4/8	E3-1230V2	3.3 GHz	8 MB	69 W	-	-		
			4/4	E3-1225V2	3.2 GHz	8 MB	77 W	-	1.25 GHz		
			4/4	E3-1220V2	3.1 GHz	8 MB	69 W	-	-		
			4/2	E3-1220LV2	2.3 GHz	3 MB	17 W	-	-		

Yellow means long-term support

www.ieiworld.com

Workstation Xeon® E3/E/W Series CPU List

Supported Sockets	Brand	Process	Cores/ Threads	Processor Number	Processor Base Frequency	Cache	TDP	Processor Graphics	Graphics Base Frequency	Memory Types	Chipset
LGA1155	Xeon® E3	32nm Sandy Bridge	4/8	E3-1290	3.6 GHz	8 MB	95 W	-	-	DDR3-1066/1333	C206/ C216
			4/8	E3-1280	3.5 GHz	8 MB	95 W	-	-		
			4/8	E3-1275	3.4 GHz	8 MB	95 W	-	1.35 GHz		
			4/8	E3-1270	3.4 GHz	8 MB	80 W	-	-		
			4/8	E3-1260L	2.4 GHz	8 MB	45 W	-	1.25 GHz		
			4/8	E3-1245	3.3 GHz	8 MB	95 W	-	1.35 GHz		
			4/8	E3-1240	3.3 GHz	8 MB	80 W	-	-		
			4/8	E3-1235	3.2 GHz	8 MB	95 W	-	1.35 GHz		
			4/8	E3-1230	3.2 GHz	8 MB	80 W	-	-		
			4/4	E3-1225	3.1 GHz	6 MB	95 W	-	1.35 GHz		
			4/2	E3-1220L	2.2 GHz	3 MB	20 W	-	-		
			4/4	E3-1220	3.1 GHz	8 MB	80 W	-	-		

Desktop Core™ i9/i7/i5/i3/Pentium®/Celeron® CPU List

Suppoted Sockets	Brand	process	Cores/ Threads	Processor Number	Processor Base Frequency	Cache	TDP	Processor Graphics	Graphics Base Frequency	Memory Types	Chipset
FCLGA1200	Core™ i9	14nm Comet Lake-S	10/20	i9-10900E	2.8 GHz	20MB	65W	Intel® UHD Graphics 630	350 MHz	DDR4-2933	W480E/ W480/ Q470E/ Q470/ H420E/ H410
				i9-10900TE	1.8 GHz	20MB	35W				
	Core™ i7		8/16	i7-10700E	2.9 GHz	16MB	65W			DDR4-2933	
				i7-10700TE	2.0 GHz	16MB	35W				
	Core™ i5		6/12	i5-10500E	3.1 GHz	8MB	65W	Intel® UHD Graphics 630		DDR4-2666	
				i5-10500TE	2.3 GHz	8MB	35W				
	Core™ i3		4/8	i3-10100E	3.2 GHz	9MB	65W	Intel® UHD Graphics 630		DDR4-2666	
				i3-10100TE	2.3 GHz	9MB	35W				
	Pentium®		2/4	G6400E	3.8 GHz	4MB	58W	Intel® UHD Graphics 630		DDR4-2400	
			2/4	G6400TE	3.2 GHz	4MB	35W				
	Celeron®		2/2	G5900E	3.2 GHz	2MB	58W	Intel® UHD Graphics 630		DDR4-2400	
			2/2	G5900TE	3.0 GHz	2MB	35W				
FCLGA1151	Core™ i9	14nm Coffee Lake refresh	8/16	i9-9900KF	3.60 GHz	16MB	95W	N/A	N/A	DDR4-2666	H310/Q370/ C246
			8/16	i9-9900T	2.10 GHz	16MB	35W	Intel® UHD Graphics 630	350 MHz		
			8/16	i9-9900	3.10 GHz	16MB	65W				
	Core™ i7	14nm Coffee Lake refresh	8/8	i7-9700E	2.60 GHz	12MB	65W	Intel® UHD Graphics 630			
			8/8	9700TE	1.80 GHz	12MB	35W				
			8/8	i7-9700K	3.60 GHz	12MB	95W				
			8/8	i7-9700	3.00 GHz	12MB	65W				
			8/8	i7-9700T	2.00 GHz	12MB	35W				
	Core™ i5	14nm Coffee Lake refresh	6/6	i5-9500E	3.00 GHz	9MB	65W	Intel® UHD Graphics 630		DDR4-2666	H310/Q370/ C246
			6/6	i5-9500TE	2.20 GHz	9MB	35W				
			6/6	i5-9600K	3.70 GHz	9MB	95W				
			6/6	i5-9500	3.00 GHz	9MB	65W				
			6/6	i5-9400	2.90 GHz	9MB	65W				
			6/6	i5-9500T	2.20 GHz	9MB	35W				
			6/6	i5-9400T	1.80 GHz	9MB	35W				
	Core™ i3	14nm Coffee Lake refresh	4/4	i3-9100E	3.10 GHz	6MB	65W	Intel® UHD Graphics 630		DDR4-2400	H310/Q370/ C246
			4/4	i3-9100TE	2.20GHz	6MB	35W				Q370/C246
		14nm Coffee Lake	4/4	i3-9100	3.60 GHz	6MB	65W				
			4/4	i3-9300	3.70 GHz	8MB	62W				
			4/4	i3-9300T	3.20 GHz	8MB	35W				
			4/4	i3-9100T	3.10 GHz	6MB	35W				
			4/4	i3-9350K	4.00 GHz	8MB	91W				

Yellow means long-term support

www.ieiworld.com

Desktop Core™ i9/i7/i5/i3/Pentium®/Celeron® CPU List

Suppoted Sockets	Brand	process	Cores/ Threads	Processor Number	Processor Base Frequency	Cache	TDP	Processor Graphics	Graphics Base Frequency	Memory Types	Chipset
FCLGA1151	Core™ i9	14nm Coffee Lake	8/16	i9-9900K	3.60 GHz	16MB	95W	Intel® UHD Graphics 630	350 MHz	DDR4-2666	H310/Q370
	Core™ i7	14nm Coffee Lake	8/8	i7-9700K	3.60 GHz	12MB	95W				
			6/12	i7-8700T	2.40 GHz	12MB	35W				
			6/12	i7-8700K	3.70 GHz	12MB	95W				
			6/12	i7-8700	3.20 GHz	12MB	65W				
			6/12	i7-8086K	4.00 GHz	12MB	95W				
	Core™ i3	14nm Coffee Lake	4/4	i3-8350K	4.00 GHz	8MB	91W	Intel® UHD Graphics 630		DDR4-2400	H310/Q370
			4/4	i3-8300	3.70 GHz	8MB	62W				
		14nm Coffee Lake	4/4	i3-8300T	3.20 GHz	8MB	35W				
			4/4	i3-8100	3.60 GHz	6MB	65W				
			4/4	i3-8100T	3.10 GHz	6MB	35W				
	Core™ i5	14nm Coffee Lake	6/6	i5-9600K	3.70 GHz	9MB	95W	Intel® UHD Graphics 630	350 MHz	DDR4-2666	H310/Q370
			6/6	i5-8600T	2.30 GHz	9MB	35W				
			6/6	i5-8600K	3.60 GHz	9MB	95W				
			6/6	i5-8600	3.10 GHz	9MB	65W				
			6/6	i5-8500T	2.10 GHz	9MB	35W				H310
			6/6	i5-8500	3.00 GHz	9MB	65W				
			6/6	i5-8400T	1.70 GHz	9MB	35W				
			6/6	i5-8400	2.80 GHz	9MB	65W				H310/Q370
	Pentium®	14nm Coffee Lake	2/4	G5600	3.90 GHz	4MB	54W	Intel® UHD Graphics 630		DDR4-2400	H310/Q370
			2/4	G5500T	3.20 GHz	4MB	35W				
			2/4	G5500	3.80 GHz	4MB	54W				
			2/4	G5400T	3.10 GHz	4MB	35W	Intel® UHD Graphics 610			
			2/4	G5400	3.70 GHz	4MB	58W				
	Celeron®	14nm Coffee Lake	2/2	G4920	3.20 GHz	2MB	54W	Intel® UHD Graphics 610		DDR4-2400	H310/Q370
			2/2	G4900T	2.90 GHz	2MB	35W				
			2/2	G4900	3.10 GHz	2 MB	54W				
FCLGA1151	Core™ i7	14nm Kaby Lake	4/8	i7-7700	3.6GHz	8 MB	65W	Intel® HD Graphics 630	350 MHz	DDR4-2133/2400, DDR3L-1333/1600 @ 1.35V	C236/Q170/ H110
			4/8	i7-7700K	4.2GHz	8 MB	91W				
			4/8	i7-7700T	2.9GHz	8 MB	35W				
		14nm Skylake	4/8	i7-6785R	3.30 GHz	8 MB	65 W	Intel® Iris™ Pro Graphics 580		DDR4-1866/2133, DDR3L-1333/1600 @ 1.35V	
			4/8	i7-6700K	4.00 GHz	8 MB	91 W	Intel® HD Graphics 530			
			4/8	i7-6700T	2.80 GHz	8 MB	35 W				
			4/8	i7-6700	3.40 GHz	8 MB	65 W				
			4/8	i7-6700TE	2.40 GHz	8 MB	35 W				
	Core™ i5	14nm Kaby Lake	4/4	i5-7600K	3.8GHz	6 MB	91W	Intel® HD Graphics 630		DDR4-2133/2400, DDR3L-1333/1600 @ 1.35V	
			4/4	i5-7600T	2.8GHz	6 MB	35W				
			4/4	i5-7600	3.5GHz	6 MB	65W				
			4/4	i5-7500	3.4GHz	6 MB	65W				
			4/4	i5-7400T	2.4GHz	6 MB	35W				
			4/4	i5-7500T	2.7GHz	6 MB	35W				
			4/4	i5-7400	3.5GHz	6 MB	65W				
		14 nm Skylake	4/4	i5-6600	3.30 GHz	6 MB	65 W	Intel® Iris™ Pro Graphics 580		DDR4-1866/2133, DDR3L-1333/1600 @ 1.35V	
			4/4	i5-6600K	3.50 GHz	6 MB	91 W				
			4/4	i5-6585R	2.80 GHz	6 MB	65 W				
			4/4	i5-6500	3.20 GHz	6 MB	65 W	Intel® HD Graphics 530			
			4/4	i5-6500T	2.50 GHz	6 MB	35 W				
			4/4	i5-6402P	2.80 GHz	6 MB	65 W	Intel® HD Graphics 510			
			4/4	i5-6400	2.70 GHz	6 MB	65 W	Intel® HD Graphics 530			
			4/4	i5-6400T	2.20 GHz	6 MB	35 W				
			4/4	i5-6500TE	2.30 GHz	6 MB	35 W				
	Core™ i3	14nm Kaby Lake	2/4	i3-7350K	4.2GHz	4 MB	60W	Intel® HD Graphics 630		DDR4-2133/2400, DDR3L-1333/1600 @ 1.35V	
			2/4	i3-7320	4.1GHz	4 MB	51W				
			2/4	i3-7300	4.0GHz	4 MB	51W				
			2/4	i3-7300T	3.5GHz	4 MB	35W				
			2/4	i3-7101E	3.9GHz	3 MB	54W				
			2/4	i3-7101TE	3.4GHz	3 MB	35W				
			2/4	i3-7100T	3.4GHz	3 MB	35W				
			2/4	i3-7100T	3.9GHz	3 MB	51W				
		14 nm Skylake	2/4	i3-6300	3.80 GHz	4 MB	51 W	Intel® HD Graphics 530		DDR4-1866/2133, DDR3L-1333/1600 @ 1.35V	
			2/4	i3-6300T	3.30 GHz	4 MB	35 W				
			2/4	i3-6320	3.90 GHz	4 MB	51 W				
			2/4	i3-6100	3.70 GHz	3 MB	51 W				
			2/4	i3-6100T	3.20 GHz	3 MB	35 W				
			2/4	i3-6100TE	2.70 GHz	4 MB	35 W				

Yellow means long-term support

www.ieiworld.com

Desktop Core™ i9/i7/i5/i3/Pentium®/Celeron® CPU List

Supported Sockets	Brand	Process	Cores/ Threads	Processor Number	Processor Base Frequency	Cache	TDP	Processor Graphics	Graphics Base Frequency	Memory Types	Chipset
FCLGA1151	Pentium®	14nm Kaby Lake	2/4	G4620	3.7GHz	3 MB	51W	Intel® HD Graphics 630	350 MHz	DDR4-2133/2400, DDR3L-1333/1600 @ 1.35V	C236/ Q170/ H110
			2/4	G4600T	3.0GHz	3 MB	35W				
			2/4	G4600T	3.6GHz	3 MB	51W				
			2/4	G4560T	2.9GHz	3 MB	35W	Intel® HD Graphics 610			
			2/4	G4560	3.5GHz	3 MB	54W				
		14nm Skylake	2/2	G4500	3.50 GHz	3 MB	51W	Intel® HD Graphics 530		DDR4-1866/2133, DDR3L-1333/1600 @ 1.35V	
			2/2	G4500T	3.00 GHz	3 MB	35W				
			2/2	G4520	3.60 GHz	3 MB	51W				
			2/2	G4400	3.30 GHz	3 MB	54W	Intel® HD Graphics 510			
			2/2	G4400T	2.90 GHz	3 MB	35W				
			2/2	G4400TE	2.40 GHz	3 MB	35W				
	Celeron®	14nm Kaby Lake	2/2	G3950	3.0GHz	2 MB	51W	Intel® HD Graphics 610	350 MHz	DDR4 2133, DDR3L 1333/1600 @ 1.35V	C236/ Q170/ H110
			2/2	G3930TE	2.7GHz	2 MB	35W			DDR4-2133, DDR3L-1600	
			2/2	G3930T	2.7GHz	2 MB	35W			DDR4 2133, DDR3L 1333/1600 @ 1.35V	
			2/2	G3930E	2.9GHz	2 MB	54W			DDR4-2133, DDR3L-1600	
			2/2	G3930	2.9GHz	2 MB	51W			DDR4 2133, DDR3L 1333/1600 @ 1.35V	
		14 nm Skylake	2/2	G3920	2.90 GHz	2 MB	51 W	Intel® HD Graphics 510		DDR4-1866/2133, DDR3L-1333/1600 @ 1.35V	
			2/2	G3900T	2.60 GHz	2 MB	35 W				
			2/2	G3900	2.80 GHz	2 MB	51 W				
			2/2	G3900TE	2.30 GHz	2 MB	35 W				
FCLGA1150	Core™ i7	22 nm Haswell	4/4	i7-4765T	2 GHz	8 MB	35 W	Intel® HD Graphics 4600	350 MHz	DDR3-1333/1600, DDR3L-1333/1600 @ 1.5V	C226/ Q87/H81 C226/ Q87/H81
			2/4	i7-4770	3.4 GHz	8 MB	84 W		350 MHz		
			4/4	i7-4770K	3.5 GHz	8 MB	84 W		350 MHz		
			4/8	i7-4770S	3.1 GHz	8 MB	65 W		350 MHz		
			4/8	i7-4770T	2.5 GHz	8 MB	45 W		350 MHz		
			4/8	i7-4771	3.5 GHz	8 MB	84 W		350 MHz		
			4/8	i7-4785T	2.2 GHz	8 MB	35 W		350 MHz		
			4/8	i7-4790	3.6 GHz	8 MB	84 W		350 MHz		
			4/8	i7-4790S	3.2 GHz	8 MB	65 W		350 MHz		
			4/8	i7-4790T	2.7 GHz	8 MB	45 W		350 MHz		
	Core™ i5		4/4	i5-4670	3.4 GHz	6 MB	84 W		350 MHz		
			4/4	i5-4670K	3.4 GHz	6 MB	84 W		350 MHz		
			4/4	i5-4670S	3.1 GHz	6 MB	65 W		350 MHz		
			4/4	i5-4670T	2.3 GHz	6 MB	45 W		350 MHz		
			4/4	i5-4690	3.5 GHz	6 MB	84 W		350 MHz		
			4/4	i5-4690S	3.2 GHz	6 MB	65 W		350 MHz		
			4/4	i5-4690T	2.5 GHz	6 MB	45 W		350 MHz		
			4/4	i5-4570	3.2 GHz	6 MB	84 W		350 MHz		
			4/4	i5-4570S	2.9 GHz	6 MB	65 W		350 MHz		
			2/4	i5-4570T	2.9 GHz	4 MB	35 W		200 MHz		
			4/4	i5-4590	3.3 GHz	6 MB	84 W		350 MHz		
			4/4	i5-4590S	3 GHz	6 MB	65 W		350 MHz		
			4/4	i5-4590T	2 GHz	6 MB	35 W		350 MHz		
			4/4	i5-4460T	1.9 GHz	6 MB	35 W		350 MHz		
			4/4	i5-4460S	2.9 GHz	6 MB	65 W		350 MHz		
			4/4	i5-4460	3.2 GHz	6 MB	84 W		350 MHz		
			4/4	i5-4440S	2.8 GHz	6 MB	65 W		350 MHz		
			4/4	i5-4440	3.1 GHz	6 MB	84 W		350 MHz		
			4/4	i5-4430S	2.7 GHz	6 MB	65 W		350 MHz		
			4/4	i5-4430	3 GHz	6 MB	84 W		350 MHz		
	Core™ i3		2/4	i3-4330	3.5 GHz	4 MB	54 W	Intel® HD Graphics 4600	350 MHz		
			2/4	i3-4330T	3 GHz	4 MB	35 W		200 MHz		
			2/4	i3-4340	3.6 GHz	4 MB	54 W		350 MHz		
			2/4	i3-4350	3.6 GHz	4 MB	54 W		350 MHz		
			2/4	i3-4350T	3.1 GHz	4 MB	35 W		200 MHz		
			2/4	i3-4360	3.7 GHz	4 MB	54 W		350 MHz		
			2/4	i3-4360T	3.2 GHz	4 MB	35 W		200 MHz		
			2/4	i3-4370	3.8 GHz	4 MB	54 W		350 MHz		
			2/4	i3-4370T	3.3 GHz	4 MB	35 W	Intel® HD Graphics 4400	200 MHz		
			2/4	i3-4170T	3.2 GHz	3 MB	35 W		200 MHz		
			2/4	i3-4170	3.7 GHz	3 MB	54 W		350 MHz		
			2/4	i3-4160T	3.1 GHz	3 MB	35 W		200 MHz		
			2/4	i3-4160	3.6 GHz	3 MB	54 W		350 MHz		
			2/4	i3-4150T	3 GHz	3 MB	35 W		200 MHz		
			2/4	i3-4150	3.5 GHz	3 MB	54 W		350 MHz		
			2/4	i3-4130T	2.9 GHz	3 MB	35 W		200 MHz		
			2/4	i3-4130	3.4 GHz	3 MB	54 W		350 MHz		

Yellow means long-term support

www.ieiworld.com

Desktop Core™ i9/i7/i5/i3/Pentium®/Celeron® CPU List

Supported Sockets	Brand	Process	Cores/ Threads	Processor Number	Processor Base Frequency	Cache	TDP	Processor Graphics	Graphics Base Frequency	Memory Types	Chipset
FCLGA1150	Pentium®	22nm Haswell	2/2	G3470	3.6 GHz	3 MB	53 W	Intel® HD Graphics	350 MHz	DDR3-1333/1600, DDR3L-1333/1600 @ 1.5V	C226/Q87/ H81
			2/2	G3460T	3 GHz	3 MB	35 W		200 MHz		
			2/2	G3460	3.5 GHz	3 MB	53 W		350 MHz		
			2/2	G3450T	2.9 GHz	3 MB	35 W		200 MHz		
			2/2	G3450	3.4 GHz	3 MB	53 W		350 MHz		
			2/2	G3440T	2.8 GHz	3 MB	35 W		200 MHz		
			2/2	G3440	3.3 GHz	3 MB	53 W		350 MHz		
			2/2	G3430	3.3 GHz	3 MB	53 W		350 MHz		
			2/2	G3420T	2.7 GHz	3 MB	35 W		200 MHz		
			2/2	G3420	3.2 GHz	3 MB	53 W		350 MHz		
			2/2	G3260T	2.9 GHz	3 MB	35 W		200 MHz	DDR3-1333, DDR3L-1333 @ 1.5V	
			2/2	G3260	3.3 GHz	3 MB	53 W		350 MHz		
			2/2	G3258	3.2 GHz	3 MB	53 W		350 MHz		
			2/2	G3250T	2.8 GHz	3 MB	35 W		200 MHz		
			2/2	G3250	3.2 GHz	3 MB	53 W		350 MHz		
			2/2	G3240T	2.7 GHz	3 MB	35 W		200 MHz		
			2/2	G3240	3.1 GHz	3 MB	53 W		350 MHz		
			2/2	G3220T	2.6 GHz	3 MB	35 W		200 MHz		
			2/2	G3220	3 GHz	3 MB	53 W		350 MHz		
	Celeron®		2/2	G1820	2.7 GHz	2 MB	53 W		350 MHz		
			2/2	G1820T	2.4 GHz	2 MB	35 W		200 MHz		
			2/2	G1830	2.8 GHz	2 MB	53 W		350 MHz		
			2/2	G1840	2.8 GHz	2 MB	53 W		350 MHz		
			2/2	G1840T	2.5 GHz	2 MB	35 W		200 MHz		
			2/2	G1850	2.9 GHz	2 MB	53 W		350 MHz		
LGA1155	Core™ i7	22nm Ivy Bridge	4/8	i7-3770T	2.5 GHz	8 MB	45 W	-	1.15 GHz	DDR3-1333/1600	Q77/Q67/ B65/H61
			4/8	i7-3770S	3.1 GHz	8 MB	65 W	-	1.15 GHz		
			4/8	i7-3770K	3.5 GHz	8 MB	77 W	-	1.15 GHz		
			4/8	i7-3770	3.4 GHz	8 MB	77 W	-	1.15 GHz		
	Core™ i7	32nm Sandy Bridge	4/8	i7-2700K	3.5 GHz	8 MB	95 W	-	1.35 GHz	DDR3-1066/1333	
			4/8	i7-2600S	2.8 GHz	8 MB	65 W	-	1.35 GHz		
			4/8	i7-2600K	3.4 GHz	8 MB	95 W	-	1.35 GHz		
			4/8	i7-2600	3.4 GHz	8 MB	95 W	-	1.35 GHz		
	Core™ i5	22nm Ivy Bridge	4/4	i5-3570T	2.3 GHz	6 MB	45 W	-	1.15 GHz	DDR3-1333/1600	
			4/4	i5-3570S	3.1 GHz	6 MB	65 W	-	1.15 GHz		
			4/4	i5-3570K	3.4 GHz	6 MB	77 W	-	1.15 GHz		
			4/4	i5-3570	3.4 GHz	6 MB	77 W	-	1.15 GHz		
			4/4	i5-3550S	3 GHz	6 MB	65 W	-	1.15 GHz		
			4/4	i5-3550	3.3 GHz	6 MB	77 W	-	1.15 GHz		
			4/4	i5-3475S	2.9 GHz	6 MB	65 W	-	1.1 GHz		
			2/4	i5-3470T	2.9 GHz	3 MB	35 W	-	1.1 GHz		
			4/4	i5-3470S	2.9 GHz	6 MB	65 W	-	1.1 GHz		
			4/4	i5-3470	3.2 GHz	6 MB	77 W	-	1.1 GHz		
			4/4	i5-3450S	2.8 GHz	6 MB	65 W	-	1.1 GHz		
			4/4	i5-3450	3.1 GHz	6 MB	77 W	-	1.1 GHz		
			4/4	i5-3350P	3.1 GHz	6 MB	69 W	-	1.05 GHz		
			4/4	i5-3330S	2.7 GHz	6 MB	65 W	-	1.05 GHz		
			4/4	i5-3330	3 GHz	6 MB	77 W	-	1.05 GHz		
	Core™ i5	32nm Sandy Bridge	4/4	i5-2550K	3.4 GHz	6 MB	95 W	-	1.25 GHz	DDR3-1066/1333	
			4/4	i5-2500T	2.3 GHz	6 MB	45 W	-	1.25 GHz		
			4/4	i5-2500S	2.7 GHz	6 MB	65 W	-	1.1 GHz		
			4/4	i5-2500K	3.3 GHz	6 MB	95 W	-	1.1 GHz		
			4/4	i5-2500	3.3 GHz	6 MB	95 W	-	1.1 GHz		
			4/4	i5-2450P	3.2 GHz	6 MB	95 W	-	1.1 GHz		
			4/4	i5-2405S	2.5 GHz	6 MB	65 W	-	1.1 GHz		
			4/4	i5-2400S	2.5 GHz	6 MB	65 W	-	1.1 GHz		
			4/4	i5-2400	3.1 GHz	6 MB	95 W	-	1.1 GHz		
			2/4	i5-2390T	2.7 GHz	3 MB	35 W	-	1.1 GHz		
			4/4	i5-2380P	3.1 GHz	6 MB	95 W	-	1.1 GHz		
			4/4	i5-2320	3 GHz	6 MB	95 W	-	1.1 GHz		
			4/4	i5-2310	2.9 GHz	6 MB	95 W	-	1.1 GHz		
			4/4	i5-2300	2.8 GHz	6 MB	95 W	-	1.1 GHz		

Yellow means long-term support

www.ieiworld.com

Desktop Core™ i9/i7/i5/i3/Pentium®/Celeron® CPU List

Supported Sockets	Brand	Process	Cores/ Threads	Processor Number	Processor Base Frequency	Cache	TDP	Graphics Base Frequency	Memory Types	Chipset
LGA1155	Core™ i3	22nm Ivy Bridge	2/4	i3-3240T	2.9 GHz	3 MB	35 W	1.05 GHz	DDR3-1333/1600	Q77/Q67/B65/H61
			2/4	i3-3240	3.4 GHz	3 MB	55 W	1.05 GHz		
			2/4	i3-3225	3.3 GHz	3 MB	55 W	1.05 GHz		
			2/4	i3-3220T	2.8 GHz	3 MB	35 W	1.05 GHz		
			2/4	i3-3220	3.3 GHz	3 MB	55 W	1.05 GHz		
	Core™ i3	32nm Sandy Bridge	2/4	i3-2130	3.4 GHz	3 MB	65 W	1.1 GHz	DDR3-1066/1333	
			2/4	i3-2125	3.3 GHz	3 MB	65 W	1.1 GHz		
			2/4	i3-2120T	2.6 GHz	3 MB	35 W	1.1 GHz		
			2/4	i3-2120	3.3 GHz	3 MB	65 W	1.1 GHz		
			2/4	i3-2105	3.1 GHz	3 MB	65 W	1.1 GHz		
			2/4	i3-2102	3.1 GHz	3 MB	65 W	1.1 GHz		
			2/4	i3-2100T	2.5 GHz	3 MB	35 W	1.1 GHz		
			2/4	i3-2100	3.1 GHz	3 MB	65 W	1.1 GHz		
	Pentium®	22nm Ivy Bridge	2/2	G2120	3.1 GHz	3 MB	55 W	1.05 GHz	DDR3-1333/1600	
			2/2	G2100T	2.6 GHz	3 MB	35 W	1.05 GHz		
LGA1155	Pentium®	32nm Sandy Bridge	2/2	G870	3.1 GHz	3 MB	65 W	1.1 GHz	DDR3-1066/1333	Q77/Q67/B65/H61
			2/2	G860T	2.6 GHz	3 MB	35 W	1.1 GHz		
			2/2	G860	3 GHz	3 MB	65 W	1.1 GHz		
			2/2	G850	2.9 GHz	3 MB	65 W	1.1 GHz		
			2/2	G840	2.8 GHz	3 MB	65 W	1.1 GHz		
			2/2	G645T	2.5 GHz	3 MB	35 W	1.1 GHz	DDR3-1066	
			2/2	G645	2.9 GHz	3 MB	65 W	1.1 GHz		
			2/2	G640T	2.4 GHz	3 MB	35 W	1.1 GHz		
			2/2	G640	2.8 GHz	3 MB	65 W	1.1 GHz		
			2/2	G632	2.7 GHz	3 MB	65 W	1.1 GHz		
			2/2	G630T	2.3 GHz	3 MB	35 W	1.1 GHz		
			2/2	G630	2.7 GHz	3 MB	65 W	1.1 GHz		
			2/2	G622	2.6 GHz	3 MB	65 W	1.1 GHz		
			2/2	G620T	2.2 GHz	3 MB	35 W	1.1 GHz		
			2/2	G620	2.6 GHz	3 MB	65 W	1.1 GHz		
	Celeron®	22nm Ivy Bridge	2/2	G1610	2.6 GHz	2 MB	55 W	1.05 GHz		
			2/2	G1620	2.7 GHz	2 MB	55 W	1.05 GHz		
			2/2	G1610T	2.3 GHz	2 MB	35 W	1.05 GHz		
	Celeron®	32nm Sandy Bridge	2/2	G555	2.7 GHz	2 MB	65 W	1 GHz		
			2/2	G550T	2.2 GHz	2 MB	35 W	1 GHz		
			2/2	G550	2.6 GHz	2 MB	65 W	1 GHz		
			2/2	G540T	2.1 GHz	2 MB	35 W	1 GHz		
			2/2	G540	2.5 GHz	2 MB	65 W	1 GHz		
			2/2	G530T	2 GHz	2 MB	35 W	1 GHz		
			2/2	G530	2.4 GHz	2 MB	65 W	1 GHz		
			1/2	G465	1.9 GHz	1.5 MB	35 W	1 GHz		
			1/2	G460	1.8 GHz	1.5 MB	35 W	1 GHz		
			1/1	G440	1.6 GHz	1 MB	35 W	1 GHz		
LGA1156	Core™ i7	45nm	Quad Core	i7-880	2.93G	8M	95W	-	DDR3-1333/1600	Q57
				i7-875K	2.93G	8M	95W	-		
				i7-870S	2.66G	8M	82W	-		
				i7-870	2.93G	8M	95W	-		
				i7-860S	2.53G	8M	82W	-		
				i7-860	2.8G	8M	95W	-		
	Core™ i5			i5-760	2.8G	8M	95W	-		
				i5-750S	2.4G	8M	82W	-		
				i5-750	2.66G	8M	95W	-		
	Core™ i5	32nm	Dual Core	i5-680	3.6G	4M	73W	733MHz		
				i5-670	3.46G	4M	73W	733MHz		
				i5-661	3.33G	4M	87W	900MHz		
				i5-660	3.33G	4M	73W	733MHz		
				i5-665K	3.2G	4M	73W	733MHz		
				i5-650	3.2G	4M	73W	733MHz		
	Core™ i3			i3-560	3.33G	4M	73W	733MHz		
				i3-550	3.2G	4M	73W	733MHz		
				i3-540	3.06G	4M	73W	733MHz		
				i3-530	2.93G	4M	73W	733MHz		
	Pentium®			G6960	2.933G	3M	73W	533MHz	DDR3-1333	
				G6950	2.8G	3M	73W	533MHz		

Yellow means long-term support **HM65/HM55 chipset doesn't support Intel® AMT feature*

www.ieiworld.com

ULT/UP3 CPU List

Supported Sockets	Brand	Process	Cores/ Threads	Processor Number	Processor Base Frequency	Cache	TDP	Processor Graphics	Graphics Base Frequency	Memory Types	Chipset
FCBGA1449	Core™ i7	10nm Tiger Lake-UP3	4/8	i7-1185G7E	2.8GHz/ 1.8GHz/ 1.2GHz	12MB	28W/ 15W/ 12W	Intel® Iris® Xegraphics 96 EU 4x4k or 2x8k Displays 2 VDBOX	1.35 GHz	DDR4-3200, LPDDR4x-4267	-
				i7-1185GRE						DDR4-3200, LPDDR4x-4267, In-Band ECC	-
	Core™ i5		4/8	i5-1145G7E	2.6GHz/ 1.5GHz/ 1.1GHz	8MB	28W/ 15W/ 12W	Intel® Iris® Xegraphics 80 EU 4x4k or 2x8k Displays 2 VDBOX	1.30 GHz	DDR4-3200, LPDDR4x-4267	-
				i5-1145GRE				Intel® Iris® Xegraphics 80 EU 4x4k or 1x8k Displays 2 VDBOX		DDR4-3200, LPDDR4x-4267, In-Band ECC	-
	Core™ i3		2/4	i3-1115G4E	3.0GHz/ 2.2GHz/ 1.7 GHz	6MB	28W/ 15W/ 12W	Intel® UHD Graphics 48EU 4x4k or 1x8k Displays 1 VDBOX	1.25 GHz	DDR4-3200, LPDDR4x-3733	-
				i3-1115GRE						DDR4-3200, LPDDR4x-3733, In -Band ECC	-
	Celeron®		2/2	6305E	1.8 GHz	4MB	15W	Intel® UHD Graphics 48EU 4x4k or 1x8k Displays 1 VDBOX	1.25 GHz	DDR4-3200, LPDDR4x-3733	-
FCBGA1528	Core™ i7	14nm Whiskey Lake	4/8	i7-8565U	1.8GHz	8MB	15W	Intel® UHD Graphics 620	300 MHz	DDR4-2400, LPDDR3-2133	-
			4/8	i7-8665U	1.9GHz	8MB	15W				-
			4/8	i7-8665UE	1.7GHz	8MB	15W				-
	Core™ i5		4/8	i5-8265U	1.6GHz	6MB	15W				-
			4/8	i5-8365U	1.6GHz	6MB	15W				-
			4/8	i5-8365UE	1.6GHz	6MB	15W				-
	Core™ i3		2/4	i3-8145U	2.10 GHz	4MB	15W				
			2/4	i3-8145UE	2.2GHz	4MB	15W				-
	Pentium®		2/4	5405U	2.3GHz	2MB	15W			DDR4-2133, LPDDR3-1866	-
	Celeron®		2/2	4205U	1.8GHz	2MB	15W	Intel® UHD Graphics 610		DDR4-2133, LPDDR3-1866	
			2/2	4305UE	2.00GHz	2MB	15W			DDR4-2133, LPDDR3-1866	-
FCBGA1356	Core™ i7	14nm Coffee lake	4/8	i7-8559U	2.70 GHz	8MB	28W	Intel® Iris™ Plus Graphics 655	300 MHz	DDR4-2400, LPDDR3-2133	-
	Core™ i5		4/8	i5-8269U	2.60 GHz	6MB	28W				-
			4/8	i5-8259U	2.30 GHz	6MB	28W				-
	Core™ i3		2/4	i3-8109U	3.00 GHz	4MB	28W				
FCBGA1356	Core™ i7	14nm Kabylake	2/4	i7-7660U	2.5GHz	4MB	15W	Intel® Iris™ Plus Graphics 640	300 MHz	DDR4-2133, LPDDR3-1866, DDR3L-1600	-
			2/4	i7-7600U	2.8GHz	4MB	15W	Intel® HD Graphics 620			-
			2/4	i7-7567U	3.5GHz	4MB	28W	Intel® Iris™ Plus Graphics 650			-
			2/4	i7-7560U	2.4GHz	4MB	15W	Intel® Iris™ Plus Graphics 640			-
			2/4	i7-7500U	2.70 GHz	4MB	15 W	Intel® HD Graphics 620			-
	Core™ i5		2/4	i5-7360U	2.3GHz	4MB	15W	Intel® Iris™ Plus Graphics 640			-
			2/4	i5-7300U	2.6GHz	3MB	15W	Intel® HD Graphics 620			-
			2/4	i5-7287U	3.3GHz	4MB	28W	Intel® Iris™ Plus Graphics 650			-
			2/4	i5-7267U	3.1GHz	4MB	28W				-
			2/4	i5-7260U	2.2GHz	4MB	15W	Intel® Iris™ Plus Graphics 640			-
			2/4	i5-7200U	2.50 GHz	3MB	15W	Intel® HD Graphics 620			-
	Core™ i3		2/4	i3-8130U	2.20 GHz	4MB	15W			DDR4-2400, LPDDR3-2133	
			2/4	i3-7130U	2.7GHz	3MB	15W			DDR4-2133, LPDDR3-1866, DDR3L-1600	-
			2/4	i3-7167U	2.8GHz	3MB	28W	Intel® Iris™ Plus Graphics 650			-
			2/4	i3-7100U	2.40 GHz	3MB	15W	Intel® HD Graphics 620			-
	Pentium®		2/4	4415U	2.3GHz	2MB	15W	Intel® HD Graphics 610			-
	Celeron®		2/2	3965U	2.2GHz	2MB	15W				-
			2/2	3865U	1.8GHz	2MB	15W				-
FCBGA1356	Core™ i7	14nm Skylake	2/4	i7-6500U	2.50 GHz	4 MB	15 W	Intel® HD Graphics 520	300 MHz	DDR4-2133, LPDDR3-1866, DDR3L-1600	-
			2/4	i7-6560U	2.20 GHz	4 MB	15 W	Intel® Iris™ Graphics 540			-
			2/4	i7-6567U	3.30 GHz	4 MB	28 W	Intel® Iris™ Graphics 550			-
			2/4	i7-6600U	2.60 GHz	4 MB	15 W	Intel® HD Graphics 520			-
			2/4	i7-6660U	2.40 GHz	4 MB	15 W	Intel® Iris™ Graphics 540			-
			2/4	i7-6650U	2.20 GHz	4 MB	15 W				-

Yellow means long-term support **HM65/HM55 chipset doesn't support Intel® AMT feature*

www.ieiworld.com

ULT/UP3 CPU List

Supported Sockets	Brand	Process	Cores/ Threads	Processor Number	Processor Base Frequency	Cache	TDP	Processor Graphics	Graphics Base Frequency	Memory Types	Chipset
FCBGA1356	Core™ i5	14nm Skylake	2/4	i5-6287U	3.10 GHz	4 MB	28 W	Intel® Iris™ Graphics 550	300 MHz	DDR4-2133, LPDDR3-1866, DDR3L-1600	-
			2/4	i5-6267U	2.90 GHz	4 MB	28 W				-
			2/4	i5-6260U	1.80 GHz	4 MB	15 W	Intel® Iris™ Graphics 540			-
			2/4	i5-6200U	2.30 GHz	3 MB	15 W	Intel® HD Graphics 520			-
			2/4	i5-6300U	2.40 GHz	3 MB	15 W				-
			2/4	i5-6360U	2.00 GHz	4 MB	15 W	Intel® Iris™ Graphics 540			-
	Core™ i3		2/4	i3-6006U	2.00 GHz	3 MB	15 W	Intel® HD Graphics 520			-
			2/4	i3-6167U	2.70 GHz	3 MB	28 W	Intel® Iris™ Graphics 550			-
			2/4	i3-6157U	2.40 GHz	3 MB	28 W				-
			2/4	i3-6100U	2.30 GHz	3 MB	15 W	Intel® HD Graphics 520			-
	Pentium®		2/4	4405U	2.10 GHz	2 MB	15 W	Intel® HD Graphics 510		DDR4-1866/2133, LPDDR3-1600/1866	-
	Celeron®		2/2	3855U	1.60 GHz	2 MB	15 W			DDR4-1866/2133, LPDDR3-1600/1866, DDR3L-1333/1600	-
			2/2	3955U	2.00 GHz	2 MB	15 W				-
FCBGA1168	Core™ i7	14nm Broadwell	2/4	i7-5650U	2.2 GHz	4 MB	15 W	Intel® HD Graphics 6000	300 MHz	DDR3L 1333/1600, LPDDR3 1600/1866	-
	Core™ i5		2/4	i5-5350U	1.8 GHz	3 MB	15 W		300 MHz		-
	Core™ i3		2/4	i3-5010U	2.1 GHz	3 MB	15 W	Intel® HD Graphics 5500	300 MHz	DDR3L 1333/1600, LPDDR 1333/1600	-
	Celeron®		2/2	3765U	1.9 GHz	2 MB	15 W	Intel® HD Graphics	300 MHz		-
	Core™ i7	22nm Haswell	2/4	i7-4650U	1.7 GHz	4 MB	15 W	Intel® HD Graphics 5000	200 MHz	DDR3L 1333/1600, LPDDR3 1333/1600	-
	Core™ i5		2/4	i5-4300U	1.9 GHz	3 MB	15 W	Intel® HD Graphics 4400	200 MHz		-
	Core™ i3		2/4	i3-4010U	1.7 GHz	3 MB	15 W		200 MHz		-
	Celeron®		2/2	2980U	1.6 GHz	2 MB	15 W	Intel® HD Graphics	200 MHz		-

Mobile Core™ i7/i5/i3/Celeron® CPU List

Supported Sockets	Brand	Process	Cores/ Threads	Processor Number	Processor Base Frequency	Cache	TDP	Processor Graphics	Graphics Base Frequency	Memory Types	Chipset
FCLGA1151	Xeon® E	14nm Coffee Lake refresh	8/16	E-2288G	3.70 GHz	16MB	95W	Intel® UHD Graphics P630	350MHz	DDR4-2666	C246
			6/12	E-2286G	4.00 GHz	12MB	95W	N/A	N/A		C240
			8/16	2278GE	3.30 GHz	16MB	80W	Intel® UHD Graphics P630	350MHz		C246
			8/16	2278GEL	2.00 GHz	16MB	35W				
			8/16	E-2278G	3.40 GHz	16MB	80W	N/A	N/A		C240
			6/12	E-2276G	3.80 GHz	12MB	80W	Intel® UHD Graphics P630	350MHz		C246
			4/8	E-2274G	4.00 GHz	8MB	83W				
			6/12	E-2246G	3.60 GHz	12MB	80W				
			4/8	E-2244G	3.80 GHz	8MB	71W				
			6/12	E-2236	3.40 GHz	12MB	80W	N/A	N/A		C240
			4/8	E-2234	3.60 GHz	8MB	71W				
			6/6	E-2226G	3.40 GHz	12MB	80W	Intel® UHD Graphics P630	350MHz		C246
			6/6	E-2226GE	3.40 GHz	12MB	80W				
			4/4	E-2224	3.40 GHz	8MB	71W	N/A	N/A		C240
FCBGA1440	Xeon® E	14nm Coffee lake	6/12	E-2186M	2.90 GHz	12MB	45W	Intel® UHD Graphics P630	350 MHz	DDR4-2666, LPDDR3-2133	CM246
			6/12	E-2176M	2.70 GHz	12MB	45W				
	Xeon® E3	14nm Kabylake	4/8	E3-1535MV6	3.10 GHz	8 MB	45W	Intel® HD Graphics P630		DDR4-2400, LPDDR3-2133, DDR3L-1600	CM236
			4/8	E3-1505MV6	3.00 GHz	8 MB	45 W				
			4/8	E3-1505LV6	2.20 GHz	8 MB	25 W			DDR4-2400	
			4/4	E3-1501LV6	2.10 GHz	6 MB	25 W				
			4/4	E3-1501MV6	2.90 GHz	6 MB	45 W				
	Xeon® E3	14nm Skylake	4/8	E3-1575MV5	3.00 GHz	8 MB	45 W	Intel® Iris™ Pro Graphics P580		DDR4-2133, LPDDR3-1866, DDR3L-1600	CM236
			4/8	E3-1545MV5	2.90 GHz	8 MB	45 W				
			4/8	E3-1535MV5	2.90 GHz	8 MB	45 W	Intel® HD Graphics P530			
			4/8	E3-1515MV5	2.80 GHz	8 MB	45 W	Intel® Iris™ Pro Graphics P580			
			4/8	E3-1505MV5	2.80 GHz	8 MB	45 W	Intel® HD Graphics P530			

Yellow means long-term support ***HM65/HM55 chipset doesn't support Intel® AMT feature***

www.ieiworld.com

Mobile Core™ i7/i5/i3/Celeron® CPU List

Supported Sockets	Brand	Process	Cores/ Threads	Processor Number	Processor Base Frequency	Cache	TDP	Processor Graphics	Graphics Base Frequency	Memory Types	Chipset
FCBGA1440	Core™ i9	14nm Coffee lake	6/12	i9-8950HK	2.90 GHz	12MB	45W	Intel® UHD Graphics 630	350 MHz	DDR4-2666, LPDDR3-2133	CM246
	Core™ i7		6/12	i7-8850H	2.60 GHz	9MB	45W				
			6/12	i7-8750H	2.20 GHz	9MB	45W				
			6/12	i7-8700B	3.20 GHz	12MB	65W			DDR4-2666	
	Core™ i5		6/6	i5-8500B	3.00 GHz	9MB	65W				
			4/8	i5-8400H	2.50 GHz	8MB	45W			DDR4-2666, LPDDR3-2133	
			6/6	i5-8400B	2.80 GHz	9MB	65W			DDR4-2666	
			4/8	i5-8300H	2.30 GHz	8MB	45W			DDR4-2666, LPDDR3-2133	
	Core™ i3		4/4	i3-8100H	3.00 GHz	6MB	35W				
FCBGA1440	Core™ i7	14nm Kabylake	4/8	i7-7920HQ	3.10 GHz	8 MB	45W	Intel® HD Graphics 630	350MHz	DDR4-2400, LPDDR3-2133, DDR3L-1600	CM236
			4/8	i7-7820HQ	2.90 GHz	8 MB	45W				
			4/8	i7-7820HK	2.90 GHz	8 MB	45W				
			4/8	i7-7820EQ	3.00 GHz	8 MB	45W			DDR4-2400	
			4/8	i7-7700HQ	2.80 GHz	6 MB	45W			DDR4-2400, LPDDR3-2133, DDR3L-1600	
	Core™ i5		4/4	i5-7442EQ	2.10 GHz	6 MB	25W			DDR4-2400	
			4/4	i5-7440HQ	2.80 GHz	6 MB	45W			DDR4-2400, LPDDR3-2133, DDR3L-1600	
			4/4	i5-7440EQ	2.90 GHz	6 MB	45W			DDR4-2400	
			4/4	i5-7300HQ	2.50 GHz	6 MB	45W			DDR4-2400, LPDDR3-2133, DDR3L-1600	
	Core™ i3		2/4	i3-7102E	2.10 GHz	3 MB	25W			DDR4-2400	
			2/4	i3-7100E	2.90 GHz	3 MB	35W				
FCBGA1440	Core™ i7	14nm Skylake	4/8	i7-6820EQ	2.80 GHz	8 MB	45 W	Intel® HD Graphics 530	350 MHz	DDR4-2133, LPDDR3-1866, DDR3L-1600	QM170/ HM170
			4/8	i7-6822EQ	2.00 GHz	8 MB	25 W				
			4/8	i7-6700HQ	2.60 GHz	6 MB	45 W				
			4/8	i7-6770HQ	2.60 GHz	6 MB	45 W	Intel® Iris™ Pro Graphics 580			
			4/8	i7-6820HK	2.70 GHz	8 MB	45 W	Intel® HD Graphics 530			
			4/8	i7-6820HQ	2.70 GHz	8 MB	45 W				
			4/8	i7-6870HQ	2.70 GHz	8 MB	45 W	Intel® Iris™ Pro Graphics 580			
			4/8	i7-6920HQ	2.90 GHz	8 MB	45 W	Intel® HD Graphics 530			
			4/8	i7-6970HQ	2.80 GHz	8 MB	45 W	Intel® Iris™ Pro Graphics 580			
FCBGA1440	Core™ i5	14nm Skylake	4/4	i5-6442EQ	1.90 GHz	6 MB	25 W	Intel® HD Graphics 530	350 MHz	DDR4-2133, LPDDR3-1866, DDR3L-1600	QM170/ HM170
			4/4	i5-6440EQ	2.70 GHz	6 MB	45 W				
			4/4	i5-6300HQ	2.30 GHz	6 MB	45 W				
			4/4	i5-6350HQ	2.30 GHz	6 MB	45 W	Intel® Iris™ Pro Graphics 580			
			4/4	i5-6440HQ	2.60 GHz	6 MB	45 W	Intel® HD Graphics 530			
	Core™ i3		2/4	i3-6102E	1.90 GHz	3 MB	25 W				
			2/4	i3-6100E	2.70 GHz	3 MB	35 W				
			2/4	i3-6100H	2.70 GHz	3 MB	35 W				
	Celeron®		2/2	G3900E	2.40 GHz	2 MB	35 W	Intel® HD Graphics 510		DDR4-1866/2133, DDR3L-1333/1600 @ 1.35V	
			2/2	G3902E	1.60 GHz	2 MB	25 W				
FCBGA1364	Core™ i7	22nm Haswell	4/8	i7-4700EC	2.7 GHz	8 MB	43 W	Intel® HD Graphics 4600	400 MHz	DDR3L 1333/1600	QM87/ HM86
			4/8	i7-4700EQ	2.4 GHz	6 MB	47 W		400 MHz		
			4/8	i7-4702EC	2 GHz	8 MB	27 W	None	400 MHz		
	Core™ i5		2/4	i5-4422E	1.8 GHz	3 MB	25 W	Intel® HD Graphics 4600	400 MHz		
			2/4	i5-4410E	2.9 GHz	3 MB	37 W		400 MHz		
			2/4	i5-4402EC	2.5 GHz	4 MB	27 W	None	-		
			2/4	i5-4402E	1.6 GHz	3 MB	25 W	Intel® HD Graphics 4600	400 MHz		
			2/4	i5-4400E	2.7 GHz	3 MB	37 W		400 MHz		
	Core™ i3		2/4	i3-4100E	2.4 GHz	3 MB	37 W		400 MHz		
			2/4	i3-4102E	1.6 GHz	3 MB	25 W		400 MHz		
			2/4	i3-4110E	2.6 GHz	3 MB	37 W		400 MHz		
			2/4	i3-4112E	1.8 GHz	3 MB	25 W		400 MHz		
	Celeron®		2/2	2002E	1.5 GHz	2 MB	25 W	Intel® HD Graphics	400 MHz		
			2/2	2000E	2.2 GHz	2 MB	37 W		400 MHz		

Yellow means long-term support ***HM65/HM55 chipset doesn't support Intel® AMT feature***

www.ieiworld.com

Mobile Core™ i7/i5/i3/Celeron® CPU List

Supported Sockets	Brand	Process	Cores/ Threads	Package Type	Processor Number	Processor Base Frequency	Cache	TDP	Processor Graphics	Graphics Base Frequency	Memory Types	Chipset
rPGA988B	Core™ i7 Extreme Edition	22nm Ivy Bridge	4/8	PGA	i7-3940XM	3 GHz	8 MB	55 W	-	1.35 GHz	DDR3/L/-RS 1333/1600	QM77/ QM67
			4/8		i7-3920XM	2.9 GHz	8 MB	55 W	-	1.3 GHz		
	Core™ i7 Extreme Edition	32nm Sandy Bridge	4/8		i7-2960XM	2.7 GHz	8 MB	55 W	-	1.3 GHz	DDR3-1066/1333/1600	
			4/8		i7-2920XM	2.5 GHz	8 MB	55 W	-	1.3 GHz		
	Core™ i7	22nm Ivy Bridge	4/8		i7-3840QM	2.8 GHz	8 MB	45 W	-	1.3 GHz	DDR3/L/-RS 1333/1600	QM77/ QM67/ HM65
			4/8		i7-3820QM	2.7 GHz	8 MB	45 W	-	1.25 GHz		
			4/8		i7-3740QM	2.7 GHz	6 MB	45 W		1.3 GHz		
			4/8		i7-3720QM	2.6 GHz	6 MB	45 W	-	1.25 GHz		
			4/8		i7-3632QM	2.2 GHz	6 MB	35 W	-	1.15 GHz		
			4/8		i7-3630QM	2.4 GHz	6 MB	45 W	-	1.15 GHz		
			4/8		i7-3612QM	2.1 GHz	6 MB	35 W	-	1.1 GHz		
			4/8		i7-3610QM	2.3 GHz	6 MB	45 W	-	1.1 GHz		
			4/8		i7-3610QE	2.3 GHz	6 MB	45 W	-	1.0 GHz	DDR3/L 1333/1600	
			2/4		i7-3520M	2.9 GHz	4 MB	35 W	-	1.25 GHz	DDR3/L/-RS 1333/1600	
		32nm Sandy Bridge	4/8		i7-2860QM	2.5 GHz	8 MB	45 W	-	1.3 GHz	DDR3-1066/1333/1600	QM77/ QM67/ HM65
			4/8		i7-2820QM	2.3 GHz	8 MB	45 W	-	1.3 GHz		
			4/8		i7-2760QM	2.4 GHz	6 MB	45 W	-	1.3 GHz		
			4/8		i7-2720QM	2.2 GHz	6 MB	45 W	-	1.3 GHz		
			4/8		i7-2710QE	2.1 GHz	6 MB	45 W	-	1.2 GHz		
			4/8		i7-2670QM	2.2 GHz	6 MB	45 W	-	1.1 GHz	DDR3-1066/1333	
			2/4		i7-2640M	2.8 GHz	4 MB	35 W	-	1.3 GHz		
			4/8		i7-2630QM	2 GHz	6 MB	45 W	-	1.1 GHz		
			2/4		i7-2620M	2.7 GHz	4 MB	35 W	-	1.3 GHz		
	Core™ i5	22nm Ivy Bridge	2/4		i5-3610ME	2.7 GHz	3 MB	35 W	-	950 MHz	DDR3/L 1333/1600	
			2/4		i5-3360M	2.8 GHz	3 MB	35 W	-	1.2 GHz	DDR3/L/-RS 1333/1600	
			2/4		i5-3320M	2.6 GHz	3 MB	35 W	-	1.2 GHz		
			2/4		i5-3210M	2.5 GHz	3 MB	35 W	-	1.1 GHz		
	Core™ i5	32nm Sandy Bridge	2/4		i5-2540M	2.6 GHz	3 MB	35 W	-	1.3 GHz	DDR3-1066/1333	
			2/4		i5-2520M	2.5 GHz	3 MB	35 W	-	1.3 GHz		
			2/4		i5-2510E	2.5 GHz	3 MB	35 W		1.1 GHz		
			2/4		i5-2450M	2.5 GHz	3 MB	35 W		1.3 GHz		
			2/4		i5-2435M	2.4 GHz	3 MB	35 W	-	1.3 GHz		
			2/4		i5-2430M	2.4 GHz	3 MB	35 W	-	1.2 GHz		
			2/4		i5-2410M	2.3 GHz	3 MB	35 W	-	1.2 GHz		
rPGA988B	Core™ i3	22nm Ivy Bridge	2/4		i3-3120M	2.5 GHz	3 MB	35 W	-	1.1 GHz	DDR3/L/-RS 1333/1600	QM77/ QM67/ HM65
			2/4		i3-3110M	2.4 GHz	3 MB	35 W	-	1 GHz		
	Core™ i3	32nm Sandy Bridge	2/4		i3-2370M	2.4 GHz	3 MB	35 W	-	1.15 GHz	DDR3-1066/1333	
			2/4		i3-2350M	2.3 GHz	3 MB	35 W	-	1.15 GHz		
			2/4		i3-2330M	2.2 GHz	3 MB	35 W	-	1.1 GHz		
			2/4		i3-2330E	2.2 GHz	3 MB	35 W	-	1.05 GHz		
			2/4		i3-2328M	2.2 GHz	3 MB	35 W	-	1.1 GHz		
			2/4		i3-2312M	2.1 GHz	3 MB	35 W	-	1.1 GHz		
			2/4		i3-2310M	2.1 GHz	3 MB	35 W	-	1.1 GHz		
	Celeron®	32nm Sandy Bridge	2/2		B840	1.9 GHz	2 MB	35 W	-	1 GHz		
			2/2		B830	1.8 GHz	2 MB	35 W	-	1.05 GHz		
			2/2		B820	1.7 GHz	2 MB	35 W	-	1.05 GHz		
			2/2		B815	1.6 GHz	2 MB	35 W	-	1.05 GHz		
			2/2		B810	1.6 GHz	2 MB	35 W	-	950 MHz		
			2/2		B800	1.5 GHz	2 MB	35 W	-	1 GHz		
			1/1		B720	1.7 GHz	2 MB	35 W	-	1 GHz		
			1/1		B710	1.6 GHz	1.5 MB	35 W	-	1 GHz		
Socket988A	Core™ i7 Extreme Edition	45nm	Quad	PGA	i7-940XM	2.13G	8M	55W	-	-	1333 MHz 1066 MHz	QM57/ HM55
					i7-920XM	2.0G	8M	55W	-	-		
	Core™ i7				i7-840QM	1.86G	8M	45W	-	-		
					i7-820QM	1.73G	8M	45W	-	-		
					i7-740QM	1.73G	6M	45W	-	-		
					i7-720QM	1.6G	6M	45W	-	-		
	Core™ i5		Dual		i7-640M	2.8G	4M	35W	-	500MHz	1066 MHz 800 MHz	
					i7-620M	2.66G	4M	35W	-			
					i5-580M	2.66G	3M	35W	-			
					i5-560M	2.66G	3M	35W	-			
					i5-540M	2.53G	3M	35W	-			
					i5-520M	2.4G	3M	35W	-			
					i5-480M	2.66G	3M	35W	-			
					i5-460M	2.53G	3M	35W	-			
					i5-450M	2.4G	3M	35W	-			
					i5-430M	2.26G	3M	35W	-			
	Core™ i3				i3-390M	2.66G	3M	35W	-			
					i3-380M	2.53G	3M	35W	-			
					i3-370M	2.4G	3M	35W	-			
					i3-350M	2.26G	3M	35W	-			
					i3-330M	2.13G	3M	35W	-			
	Celeron®				P4600	2.0G	2M	35W	-			
					P4500	1.86G	2M	35W	-			

Yellow means long-term support **HM65/HM55 chipset doesn't support Intel® AMT feature*

www.ieiworld.com

IEI AI Solution Accelerates Your AI Initiative

IEI's AI hardware ready system ideal for deep learning inference computing to help you get faster, deeper insights into your customers and your business. IEI's AI inference system. support Intel® FPGA acceleration cards, and Intel® VPU acceleration cards, NVIDIA graphics cards, and google TPU. Provides additional computational power plus end-to-end solution to run your tasks more efficiently. With the Intel® OpenVINO toolkit, NVIDIA TensorRT and Google Tensorflow Lite, it can help you deploy your solutions faster than ever.

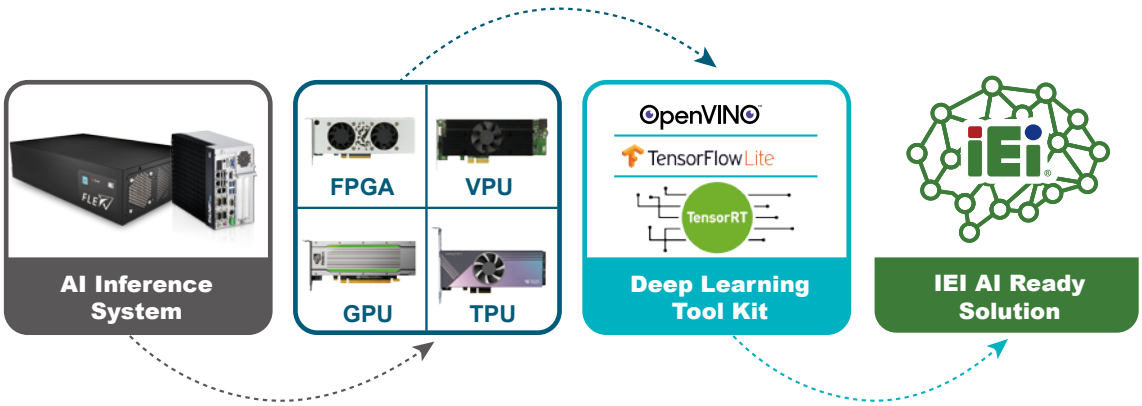

Deep learning and inference

Deep learning is part of the machine learning method. It allows computational models that are composed of multiple processing layers to learn representations of data with multiple levels of abstraction.Deep neural network and recurrent neural network architectures have been used in applications such as object recognition, object detection, feature segmentation, text-to-speech, speech-to-text, translation, etc.In some cases the performance of deep learning algorithms can be even more accurate than human judgement.

In the past, machine learning required researchers and domain experts knowledge to design filters that extracted the raw data into feature vectors. However, with the contributions of deep learning accelerators and algorithms, trained models can be applied to the raw data, which could be utilized to recognize new input data in inference.

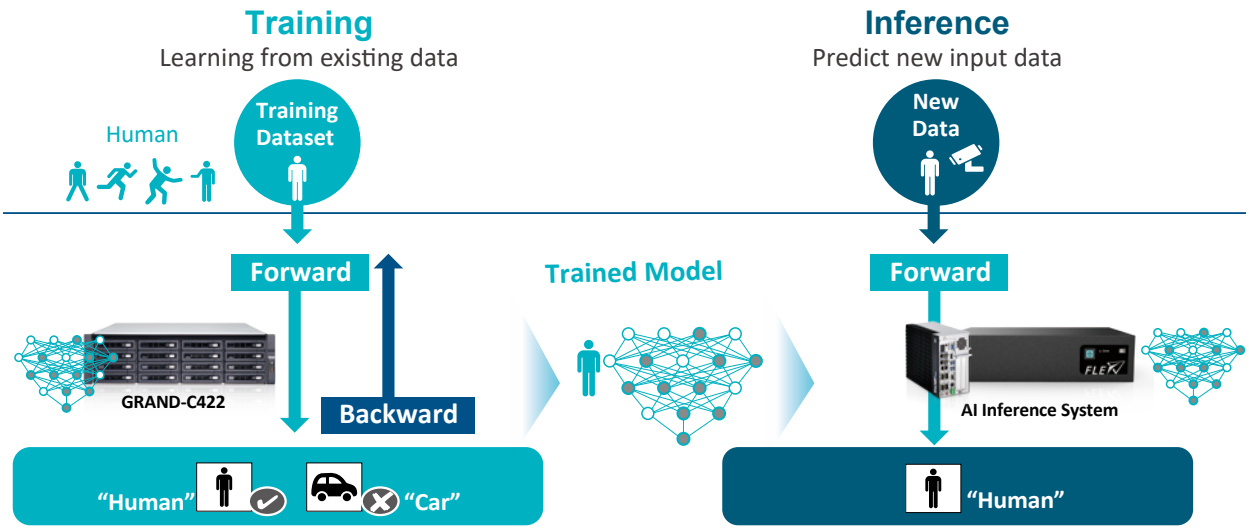

Edge Computing

The advantages of edge computing:

- Reduce data center loading, transmit less data, reduce network traffic bottlenecks.
- Real-time applications, the data is analyzed locally, no need long distant data center.
- Lower costs, no need to implement sever grade machine to achieve non complex applications.

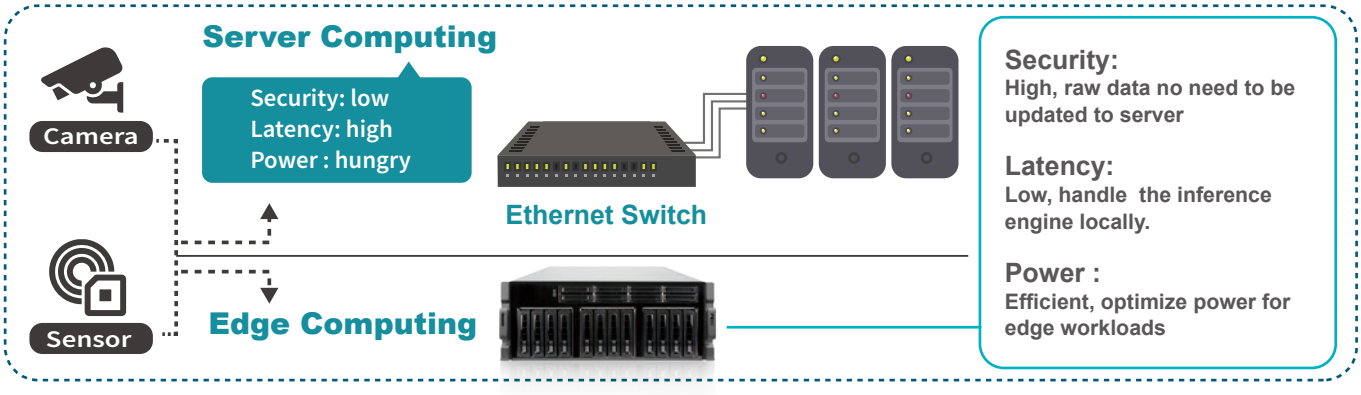

Human Sorting
Sorting by human bare-eyes, the standard can not fix due to different person. Low accuracy, low productivity

Machine Vision
Training and sorting by conventional machine vision method,need well-trained engineer to teach and modify the inspection criteria. Low latency, but low accuracy if product has too much variations.

Deep Learning Server
Implement deep learning method for training and sorting, reduce human bias and machine vision training process. High CTO, high latency, power hungry, high power consumption

Deep learning Edge
Implement deep learning method for training and sorting, reduce human bias and machine vision training process. Low latency, low CTO, power efficiency, low power consumption

Deployment Workflow

Training

TensorFlow
Caffe
mxnet
ONNX

Train your own Deep Learning model using major popular open frameworks and platforms

Trained Model
.caffemodel
.pb
.params

Model Optimize





Run the Model Optimizer to produce an optimized Intermediate Representation (IR) of model

intel
Intermediate Representation(IR)

NVIDIA
Model file

Google
Tensorflow lite model file

Development & Deployment

Applications

- Surveillance
- Traffic monitoring
- Attendance system
- People counting

Integrate the Inference Engine in your application to deploy the model in the target environment

Edge AI Software SDK

• Intel® Distribution of OpenVINO™ toolkit

Intel® Distribution of OpenVINO™ toolkit is based on convolutional neural networks (CNN), the toolkit extends workloads across multiple types of Intel® platforms and maximizes performance.

It can optimize pre-trained deep learning models such as Caffe, MXNET, and ONNX Tensorflow. The tool suite includes more than 20 pre-trained models, and supports 100+ public and custom models (includes Caffe*, MXNet, TensorFlow*, ONNX*, Kaldi*) for easier deployments across Intel® silicon products (CPU, GPU/Intel®Processor Graphics, FPGA, VPU).

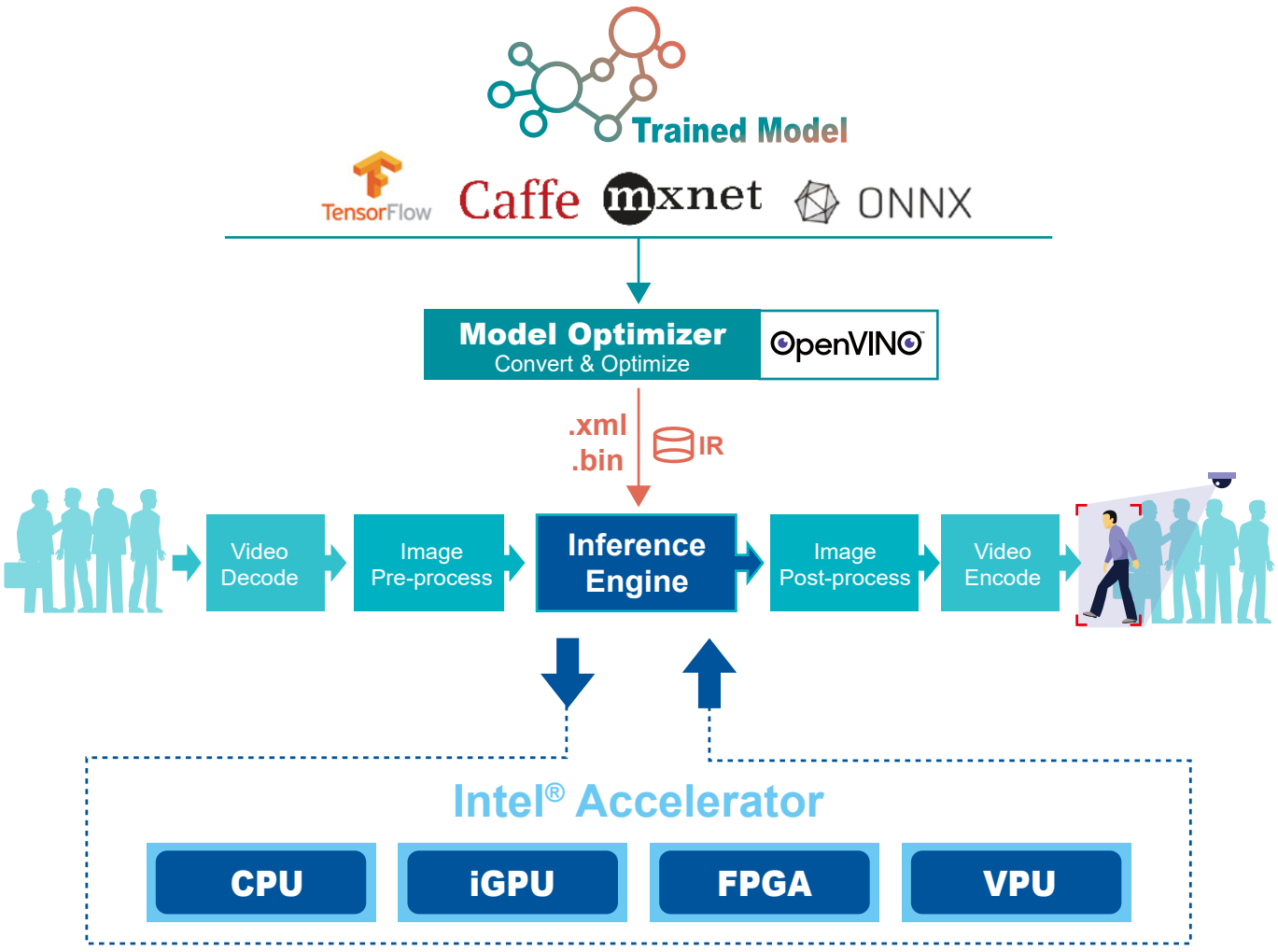

• Intel® Vision Accelerator Design

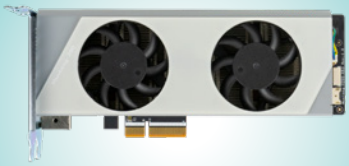

Mustang-V200-KB3
Three Intel® Movidius™ Keem Bay™



Mustang-M2BM-KB1
Intel® Movidius™ Keem Bay™



Mustang-F100-A10
Intel® Arria® 10 GX1150 FPGA



Mustang-V100-MX8
Eight Intel® Movidius™ Myriad™ X MA2485 VPU



Mustang-V100-MX4
Intel® Movidius™ Myriad™ X MA2485 VPU

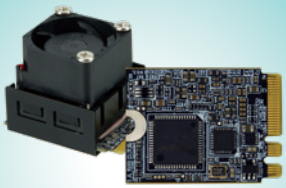

Mustang-M2AE-MX1
Intel® Movidius™ Myriad™ X MA2485 VPU

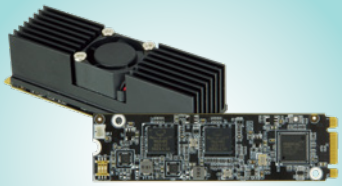

Mustang-M2BM-MX2
Intel® Movidius™ Myriad™ X MA2485 VPU

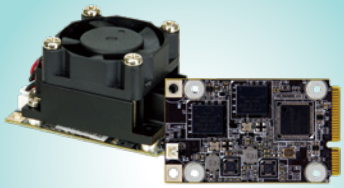

Mustang-MPCIE-MX2
Intel® Movidius™ Myriad™ X MA2485 VPU

• Intel® Certified Developer kit

TANK



FLEX



NVIDIA TensorRT

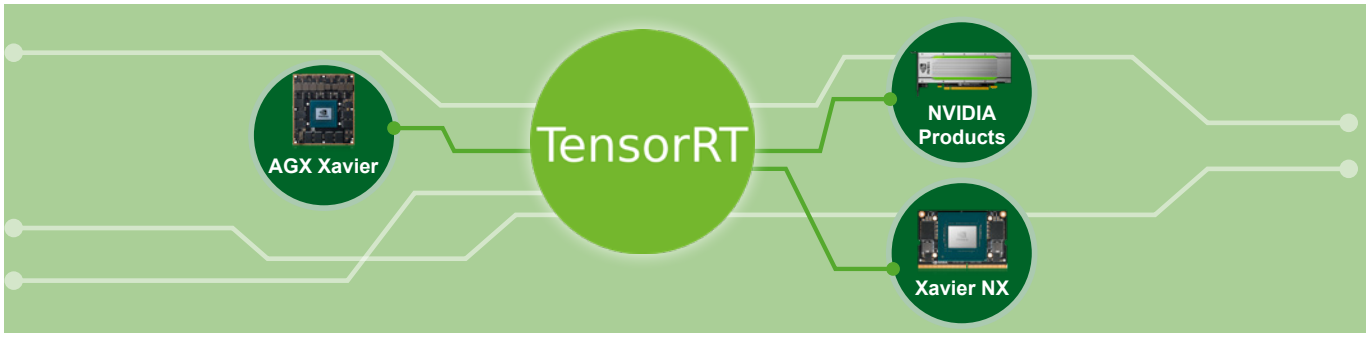

ISV Application	Object Detection	ALPR	Video Search	Face Recognition	Heat Mapping
Ecosystem	Sensors	AI/System Software	Design Services		
Accelerated Modules	Medical AI Inference	Artificial Intelligence	Computer Vision	Accelerated Computing	
IEI Products	HTB-300	HTB-200			
SDK/OS	IEI BSP, Linux®	Windows®10, Linux®			
AI Accelerator	Jetson Nano™	Jetson Xavier™ NX	Jetson AGX Xavier™	Tesla T4	

- **IEI AI Edge Computing - Faster and Less Power**

Cloud

Edge Device

On-premise edge computing

AI Accelerator

TensorRT | DeepStream | Jetpack

Jetson AGX Xavier™

Graphics Card

• Embedded AI and Edge Computing Solutions from NVIDIA

Top-to-bottom Embedded AI Computer Lineup

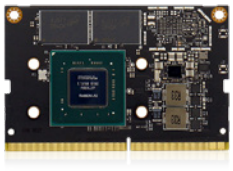



Item	Jetson Nano™	Jetson Xavier™ NX	Jetson AGX Xavier™
GPU	128-core Maxwell 0.5 TFLOPs (FP16)	384-core Volta 21 TOPs (INT8)	512-core Volta + NVDLA 32 TOPS (INT8)
CPU	4-core ARM A57	6-core Carmel ARM CPU (3x) 2MB L2 + 4MB L3	8-core Carmel ARM CPU (4x) 2MB L2 + 4MB L3
Memory	4 GB 64-bit LPDDR4 25.6 GB/s	8 GB 128-bit LPDDR4x 51.2 GB/s	Up to 32GB 256-bit LPDDR4x 137 GB/s
Storage	16 GB eMMC	16 GB eMMC	32 GB eMMC
Encode	4K @ 30 (H.265)	2x 4K @ 30 (H.265)	4x 4K @ 60 (H.265)
Decode	4K @ 60 (H.265)	2x 4K @ 60 (H.265)	6x 4K @ 60 (H.265)
Camera	12 (3x4 or 4x2) MIPI CSI-2 D-PHY 1.1 lanes (18Gbps)	12-lane (3x4 or 6x2) MIPI CSI-2 D-PHY 1.2 (30 Gbps)	16-lane MIPI CSI-2 | 8-lanes SLVS-EC D-PHY (40 Gbps) C-PHY (59 Gbps)
Mechanical	69.6mm x 45mm	69.6mm x 45mm	100mm x 87mm
	260-pin edge connector	260-pin edge connector	699-pin connector
Software	JetPack SDK – Unified software release across all Jetson products		
Related System	PPC-W15AI-NX		HTB-300-XA

• Deep Learning Inference Performance

IEI's AI edge systems are designed as a total solution for various applications and improving the performance and flexibility of medical imaging and industrial AI inference. With IEI's AI edge systems, our SI customers not only can design their deep learning software on the systems but also can market the system as a complete solution. This approach can simplify the workflow and processes of the system integration when launching the customized deep learning solution into the market.

Source: https://www.nvidia.com/en-us/

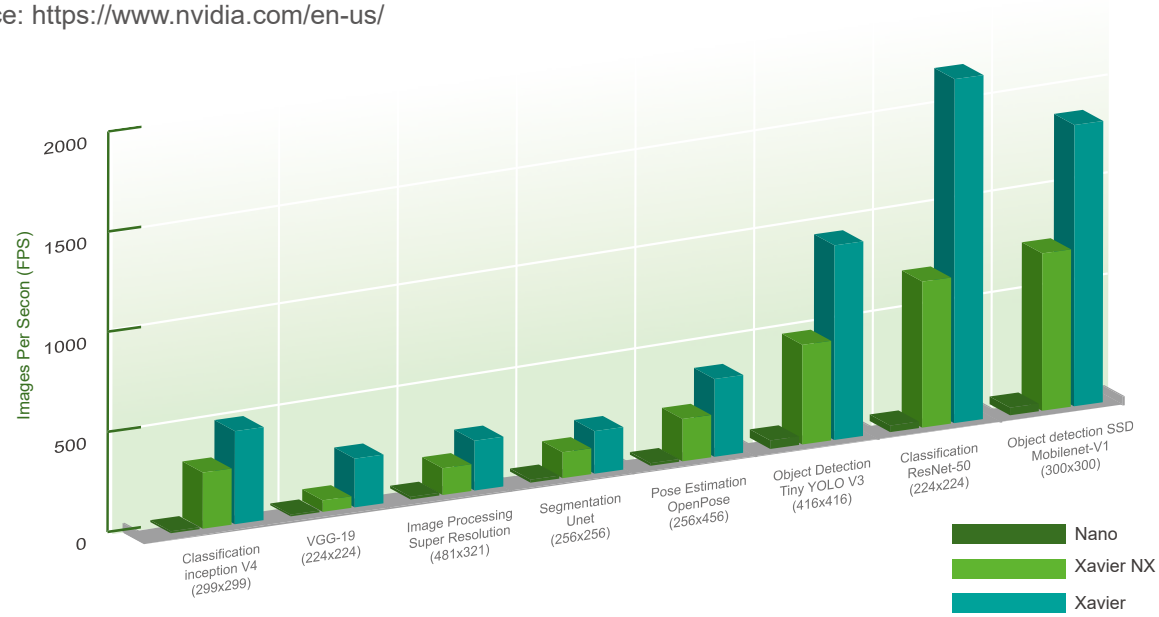

Google TensorFlow Lite

• TensorFlow models on the Edge TPU - Coral

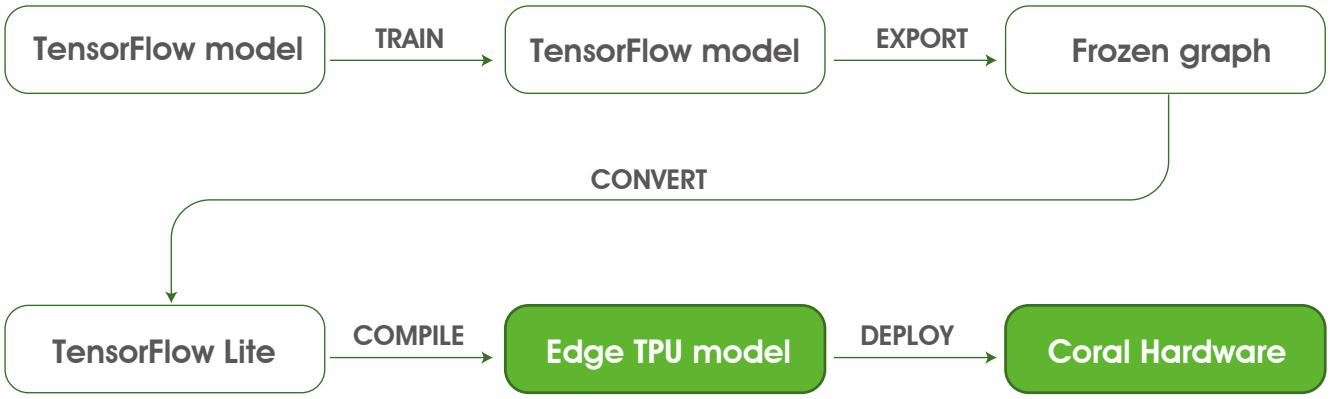

• Edge TPU Coral

- Google Edge TPU ML accelerator: 4 TOPS peak performance (int8) / 2 TOPS per watt
- Integrated power management
- PCIe Gen2 x1 or USB 2.0 interface
- Surface-mounted (LGA) module
- Size: 15.0 x 10.0 x 1.5 mm
- Weight: 0.67 g
- Operating temp: -40°C~85°C
- RoHS compliant

Source: https://coral.ai/docs/module/datasheet/

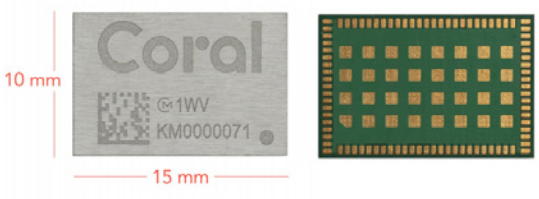

As an industrial PC AI accelerator manufacturer, IEI keep provide excellent performance AI accelerator's option to fulfill different AI task. Google Coral edge TPU provide up to 4TOPS and power consumption is only 2 watt per TPU module.

Google edge TPU leverage well-developed Tensorflow Lite community, can fast implement the existing model zoo to your edge inference project, from image classification, object detection to image segmentation.

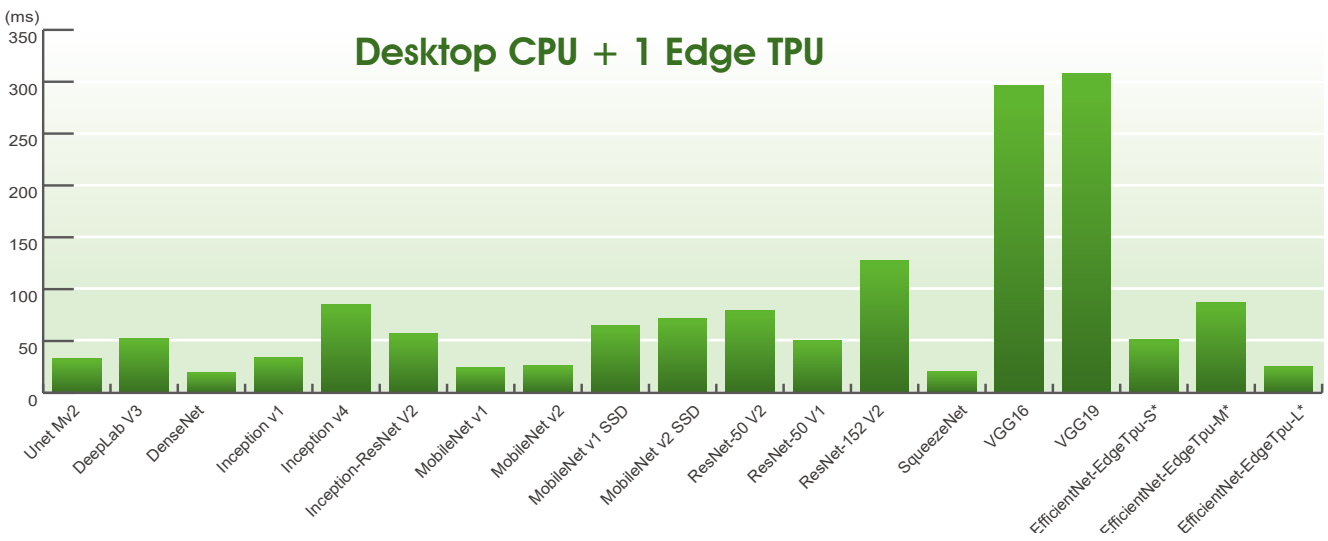

• Mustang-T100-T5

IEI Mustang-T100-T5 leverage the power of Google Coral edge TPU, it integrates five Coral TPU module into one half-height, half-length, single slot PCIe card, and can provide up to 20 TOPS, is an idea compact PCIe accelerator for multiple AI tasks application.



Feature

- 5 x Google Edge TPU ML accelerator
- 20 TOPS peak performance (int8)
- Host interface PCIe Gen2 x 4
- Low-profile PCIe form factor
- Approximate 15W
- RoHS compliants

System Requirements

- Linux:
  64-bit version of Debian 10 or Ubuntu 16.04 (or newer)
  x86-64 or ARMv8 system architecture
- Windows:
  64-bit version of Windows 10
  x86-64 system architecture

Mustang-T100-T5 Block Diagram

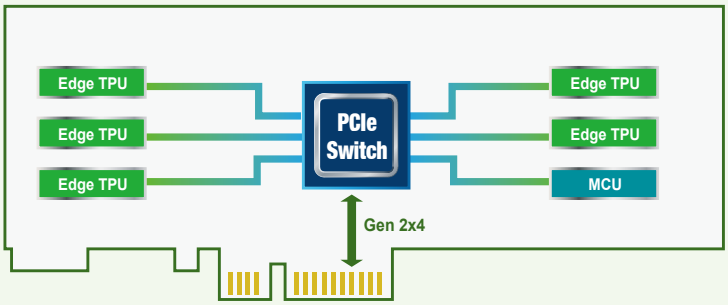

IEI provide series of system to support Mustang-T100-T5 accelerator such as TANK-870AI & FLEX-BX200AI.

• Solutions for on-device intelligence

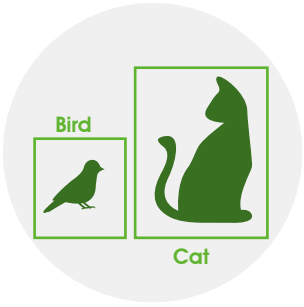

Object detection

Draw a square around the location of various recognized objects in an image



Pose estimation

Estimate the poses of people in an image by identifying various body joints.



Image segmentation

Identify various objects in an image and their location on a pixel-by-pixel basis.



Key phrase detection

Listen to audio samples and quickly recognize known words and phrases.

Source: https://coral.ai/

AI Use Cases

• Industrial

• Intel® AIoT Edge Insights Solution with Splunk

Intel® Edge Insights for Industrial and Splunk cloud data collection and analysis services. Edge Insights for Industrial helps to address various industrial and manufacturing usages, which include data collection, storage, and analytics on a variety of hardware nodes across the factory floor. Splunk is a software platform to search, analyze and visualize the machine-generated data gathered from the websites, applications, sensors, devices etc. which make up your IT infrastructure and business.

This solution can provide complete and convenient from data collection, storage, computing, etc. Simplify the data processing time and developing period effectively.

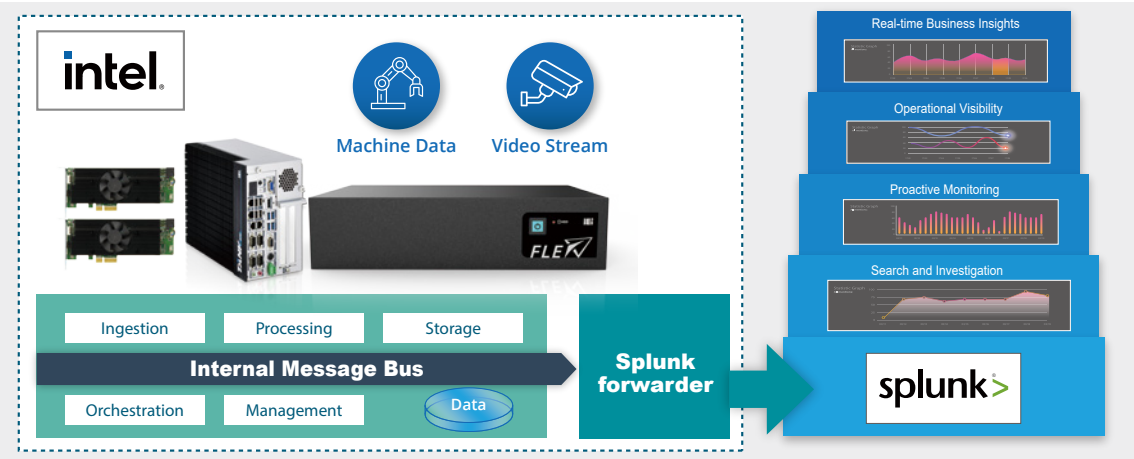

• Machine Vision for Sorting and Grading of Agricultural Products

Agricultural products are valued by their appearance. The color indicates parameters like ripeness, defects, etc. The quality decisions vary among the graders and often inconsistent. Machine vision technology offers the solution for all these problems.

The FLEX series designed for machine vision market has four PCIe 3.0 expansion slots for installing motion controller cards, GP GPU/FPGA/VPU cards and the PoE Ethernet card which is developed by IEI and has four GbE Power over Ethernet (PoE) ports compliant with IEEE 802.3af for direct connection to CCTV cameras without needing separate power.

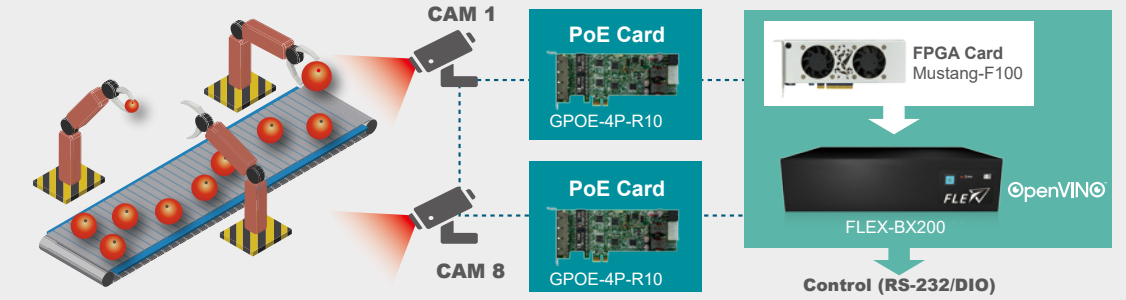

• Retail

• Social Distance Monitoring

Indoor people congestion detection for COVID19 prevention with ITG-100AI. It can deploy in retail hotel office and restaurant. Also data can be sync to your remote devices

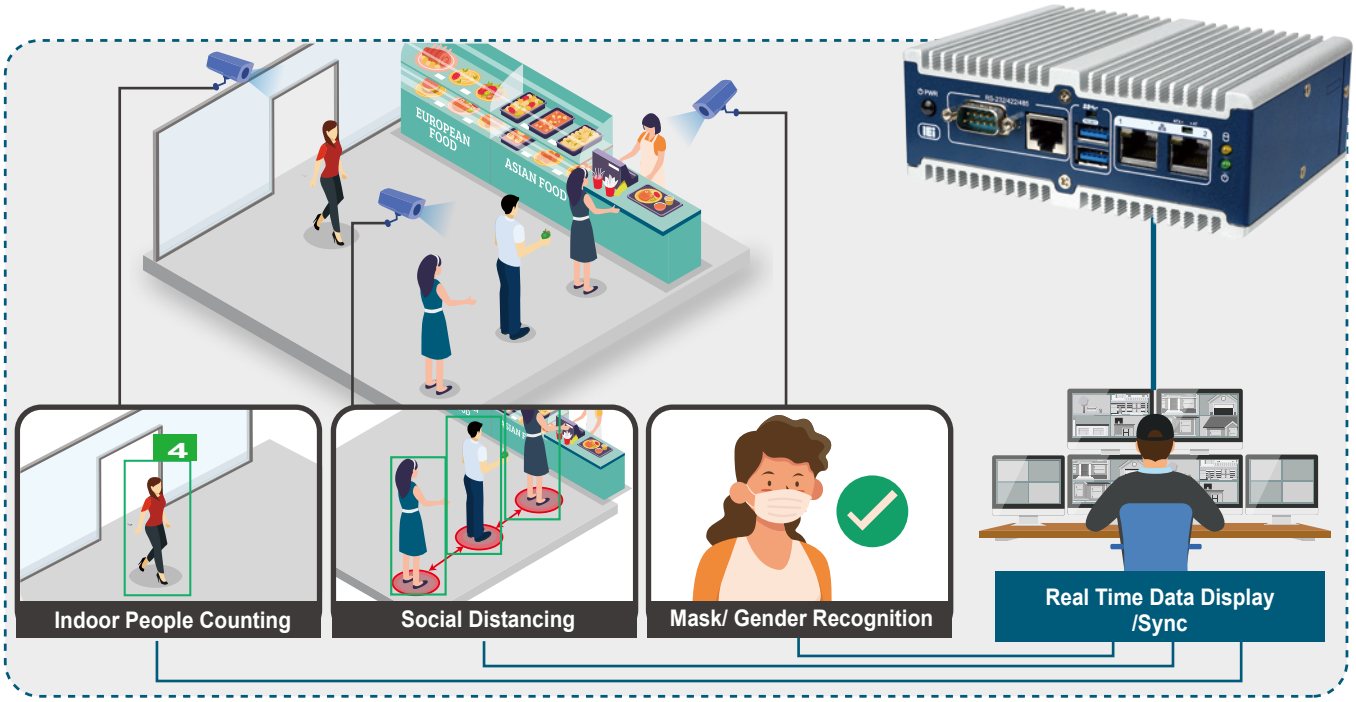

• Shopping mall surveillance

AI surveillance system can install in shopping mall for monitoring numbers of visitor and detect any suspicious person inside the mall. With TANK-870AIoT dev. Kit and Mustang-V10-MX8 we can expand more camera channel in the shopping mall.



• Medical

The colon cancer could occur everywhere in the large intestine, the medical personnel need to be very cautious when doing colonoscopy. This application assists the doctor to pay more attention when inflammation, infections, ulcers, polyps or any other abnormal tissues are detected in a gastrointestinal tract inspection. We try to reduce the human error resulting from fatigue or distraction in the daily clinical work. IEI and aetherAI roll out the medical image AI solution together to meet the market demand.

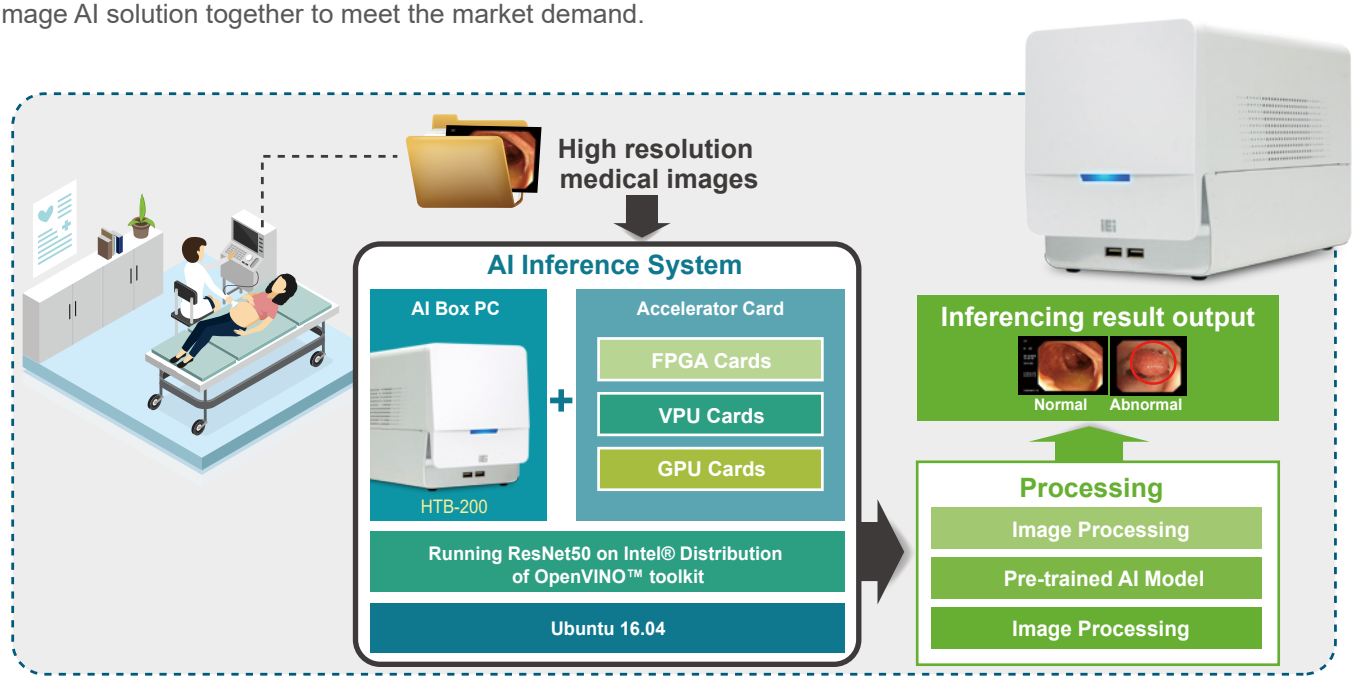

• Transportation

AI Computer vision for Electric Unmanned Delivery Vehicle. The AI computer vision can help to detect and analyze image data with color information, such as traffic light, sign mark. And in the delivery vehicle, AI computer vision technology helps to detect receiver information to identify ID, while customer is picking up their goods. So computer vision AI is the one of the key component in unmanned vehicle.

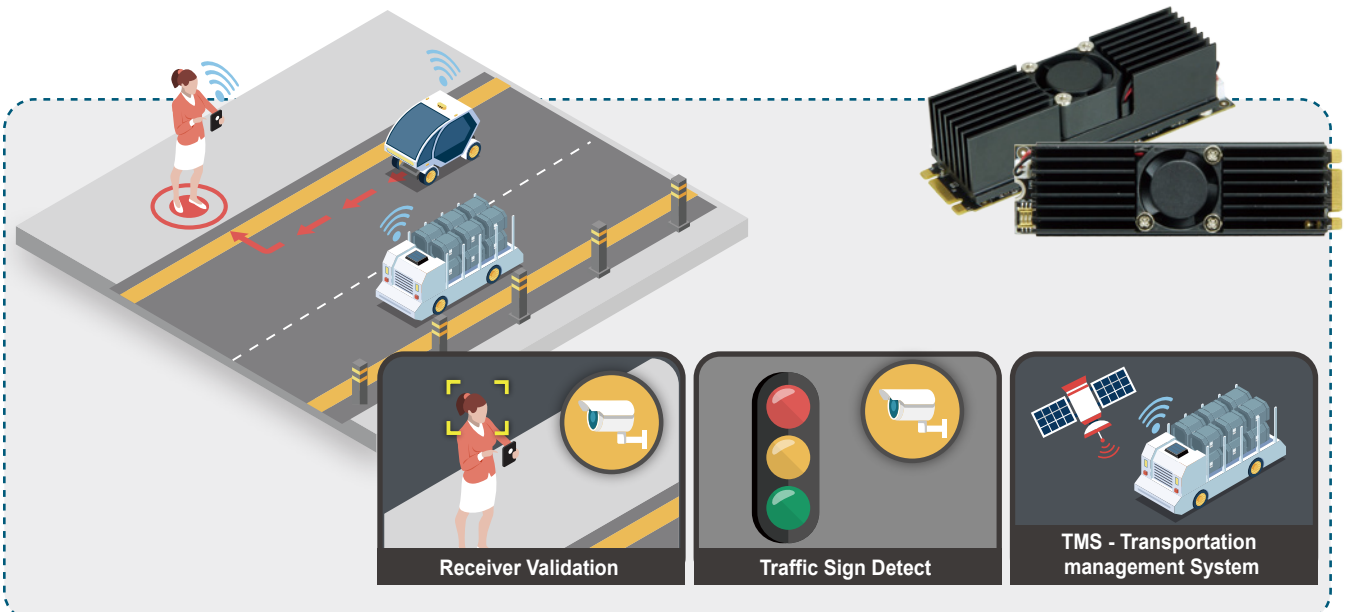

Smart Choice for Inference System with AI



Intel® certified developer ready kit

IEI edge AI ready system

OpenVINO

IEI AI accelerator products

Google edge TPU Product

IEI GRAND AI Training Server System

TANK AIoT Developer Kit



Feature

- 6th/7th Gen Intel® Core™/Xeon® processor platform with Intel® Q170/C236 chipset and DDR4 memory
- Dual independent display with high resolution support
- Rich high-speed I/O interfaces on one side for easy installation
- On-board internal power connector for providing power to add-on cards
- Great flexibility for hardware expansion
- Pre-installed Ubuntu 16.04 LTS
- Pre-installed Intel® Distribution of Open Visual Inference & Neural Network Optimization (OpenVINO™) toolkit,Intel® Media SDK, Intel® System Studio and Arduino® Create

Specifications

Model Name	TANK AIoT Dev. Kit
Chassis	
Color	Black C + Silver
Dimensions (WxDxH)	121.5 x 255.2 x 205 mm (4.7" x 10" x 8")
System Fan	Fan
Chassis Construction	Extruded aluminum alloys
Weight (Net/Gross)	4.2 kg (9.26 lbs)/ 6.3 kg (13.89 lbs)
Motherboard	
CPU	Intel® Xeon® E3-1268LV5 2.4GHz (up to 3.4 GHz, Quad Core, TDP 35W) Intel® Core™ i7-7700T 2.9GHz (up to 3.8 GHz, Quad Core, TDP 35W) Intel® Core™ i5-7500T 2.7GHz (up to 3.3 GHz, Quad Core, TDP 35W) Intel® Core™ i7-6700TE 2.4 GHz (up to 3.4GHz, quad-core, TDP 35W) Intel® Core™ i5-6500TE 2.3 GHz (up to 3.3GHz, quad-core, TDP 35W)
Chipset	Intel® Q170/C236 with Xeon® E3 only
System Memory	2 x 260-pin DDR4 SO-DIMM, 8 GB pre-installed (for i5/i5KBL/i7 sku) 16 GB pre-installed (for i7KBL sku) 32 GB pre-installed (for E3 sku)
Storage	
Hard Drive	2 x 2.5'' SATA 6Gb/s HDD/SSD bay, RAID 0/1 support (1x 2.5" 1TB HDD pre-installed)
I/O Interfaces	
USB 3.2 Gen 1	4
USB 2.0	4
Ethernet	2 x RJ-45 LAN1: Intel® I219LM PCIe controller with Intel® vPro™ support LAN2 (iRIS): Intel® I210 PCIe controller
COM Port	4 x RS-232 (2 x RJ-45, 2 x DB-9 w/2.5KV isolation protection) 2 x RS-232/422/485 (DB-9)
Digital I/O	8-bit digital I/O, 4-bit input / 4-bit output
Display	1 x VGA 1 x HDMI/DP 1 x iDP (optional)
Resolution	VGA: Up to 1920 x 1200@60Hz HDMI/DP: Up to 3840x2160@30Hz / 4096×2304@60Hz
Audio	1 x Line-out, 1 x Mic-in
TPM	1x Infineon TPM 2.0 Module
Expansions	
Backplane	2 x PCIe x8
PCIe Mini	1 x Half-size PCIe Mini slot 1 x Full-size PCIe Mini slot (supports mSATA, colay with SATA)
Power	
Power Input	DC Jack: 9 V~36 V DC Terminal Block: 9 V~36 V DC
Power Consumption	19 V@3.68 A (Intel® Core™ i7-6700TE with 8 GB memory)
Internal Power output	5V@3A or 12V@3A
Reliability	
Mounting	Wall mount
Operating Temperature	E3-1268LV5 -20°C ~ 60°C with air flow (SSD), 10% ~ 95%, non-condensing i7-7700T -20°C ~ 35°C with air flow (SSD), 10% ~ 95%, non-condensing i5-7500T -20°C ~ 45°C with air flow (SSD), 10% ~ 95%, non-condensing i7-6700TE -20°C ~ 45°C with air flow (SSD), 10% ~ 95%, non-condensing i5-6500TE -20°C ~ 60°C with air flow (SSD), 10% ~ 95%, non-condensing
Operating Vibration	MIL-STD-810G 514.6 C-1 (with SSD)
Safety/EMC	CE/FCC/RoHS
OS	
Supported OS	Win10/Linux Ubuntu 16.04 LTS

Warning: DO NOT install the add-on card into the TANK AIoT Dev. Kit before shipment. It is recommended to ship them with their original boxes to prevent the add-on card from being damaged.

Ordering Information

Part No.	Description
TANK-870AI-E3/32G/2A-R11	Ruggedized embedded system with Intel® Xeon® E3-1268LV5 2.4GHz, (up to 3.4 GHz, Quad Core, TDP 35W), 32 GB DDR4 pre-installed memory, 2 x PCIe by 8 expansion, 2.5” 1TB HDD, TPM 2.0, 9~36V DC, 150W AC DC power adaptor, RoHS
TANK-870AI-E3/32G/2A/F-R11	Ruggedized embedded system with Intel® Xeon® E3-1268LV5 2.4GHz, (up to 3.4 GHz, Quad Core, TDP 35W), 32 GB DDR4 pre-installed memory, 2 x PCIe by 8 expansion, 2.5" 1TB HDD, TPM 2.0, 9~36V DC, 150W AC DC power adaptor, Mustang-F100, RoHS
TANK-870AI-E3/32G/2A/V-R11	Ruggedized embedded system with Intel® Xeon® E3-1268LV5 2.4GHz, (up to 3.4 GHz, Quad Core, TDP 35W), 32 GB DDR4 pre-installed memory, 2 x PCIe by 8 expansion, 2.5" 1TB HDD, TPM 2.0, 9~36V DC, 150W AC DC power adaptor, Mustang-V100, RoHS
TANK-870AI-i7KBL/16G/2A-R11	Ruggedized embedded system with Intel® Core™ i7-7700T 2.9GHz, (up to 3.8 GHz, Quad Core, TDP 35W), 16 GB DDR4 pre-installed memory, 2 x PCIe by 8 expansion, 2.5” 1TB HDD, TPM 2.0, 9~36V DC, 150W AC DC power adaptor, RoHS
TANK-870AI-i7KBL/16G/2A/F-R11	Ruggedized embedded system with Intel® Core i7-7700T 2.9GHz, (up to 3.8 GHz, Quad Core, TDP 35W), 16GB DDR4 pre-installed memory, 2 x PCIe by 8 expansion, 2.5" 1TB HDD, TPM 2.0, 9~36V DC, 150W AC DC power adaptor, Mustang-F100, RoHS
TANK-870AI-i7KBL/16G/2A/V-R11	Ruggedized embedded system with Intel® Core i7-7700T 2.9GHz, (up to 3.8 GHz, Quad Core, TDP 35W), 16GB DDR4 pre-installed memory, 2 x PCIe by 8 expansion, 2.5" 1TB HDD, TPM 2.0, 9~36V DC, 150W AC DC power adaptor, Mustang-V100, RoHS
TANK-870AI-i7/8G/2A-R11	Ruggedized embedded system with Intel® Core™ i7-6700TE 2.4GHz, (up to 3.4 GHz, Quad Core, TDP 35W), 8 GB DDR4 pre-installed memory, 2 x PCIe by 8 expansion, 2.5” 1TB HDD, TPM 2.0, 9~36V DC, 150W AC DC power adaptor, RoHS
TANK-870AI-i7/8G/2A/F-R11	Ruggedized embedded system with Intel® Core i7-6700TE 2.4GHz, (up to 3.4 GHz, Quad Core, TDP 35W), 8 GB DDR4 pre-installed memory, 2 x PCIe by 8 expansion, 2.5" 1TB HDD, TPM 2.0, 9~36V DC, 150W AC DC power adaptor, Mustang-F100, RoHS
TANK-870AI-i7/8G/2A/V-R11	Ruggedized embedded system with Intel® Core i7-6700TE 2.4GHz, (up to 3.4 GHz, Quad Core, TDP 35W), 8 GB DDR4 pre-installed memory, 2 x PCIe by 8 expansion, 2.5" 1TB HDD, TPM 2.0, 9~36V DC, 150W AC DC power adaptor, Mustang-V100, RoHS
TANK-870AI-i5KBL/8G/2A-R11	Ruggedized embedded system with Intel® Core™ i5-7500T 2.7GHz, (up to 3.3 GHz, Quad Core, TDP 35W), 8 GB DDR4 pre-installed memory, 2 x PCIe by 8 expansion, 2.5” 1TB HDD, TPM 2.0, 9~36V DC, 150W AC DC power adaptor, RoHS
TANK-870AI-i5KBL/8G/2A/F-R11	Ruggedized embedded system with Intel® Core i5-7500T 2.7GHz, (up to 3.3 GHz, Quad Core, TDP 35W), 8 GB DDR4 pre-installed memory, 2 x PCIe by 8 expansion, 2.5" 1TB HDD , TPM 2.0, 9~36V DC, 150W AC DC power adaptor, Mustang-F100, RoHS
TANK-870AI-i5KBL/8G/2A/V-R11	Ruggedized embedded system with Intel® Core i5-7500T 2.7GHz, (up to 3.3 GHz, Quad Core, TDP 35W), 8 GB DDR4 pre-installed memory, 2 x PCIe by 8 expansion, 2.5" 1TB HDD, TPM 2.0, 9~36V DC, 150W AC DC power adaptor, Mustang-V100, RoHS
TANK-870AI-i5/8G/2A-R11	Ruggedized embedded system with Intel® Core™ i5-6500TE 2.3GHz, (up to 3.3 GHz, Quad Core, TDP 35W), 8 GB DDR4 pre-installed memory, 2 x PCIe by 8 expansion, 2.5” 1TB HDD, TPM 2.0, 9~36V DC, 150W AC DC power adaptor, RoHS
TANK-870AI-i5/8G/2A/F-R11	Ruggedized embedded system with Intel® Core i5-6500TE 2.3GHz, (Up to 3.3 GHz, Quad Core, TDP 35W), 8 GB DDR4 pre-installed memory, 2 x PCIe by 8 expansion, 2.5" 1TB HDD, TPM 2.0, 9~36V DC, 150W AC DC power adaptor, Mustang-F100, RoHS
TANK-870AI-i5/8G/2A/V-R11	Ruggedized embedded system with Intel® Core i5-6500TE 2.3GHz, (Up to 3.3 GHz, Quad Core, TDP 35W), 8 GB DDR4 pre-installed memory, 2 x PCIe by 8 expansion, 2.5" 1TB HDD, TPM 2.0, 9~36V DC, 150W AC DC power adaptor, Mustang-V100, RoHS

AI Accelerator Card Options

Part No.	Description
Mustang-F100-A10-R10	PCIe FPGA Highest Performance Accelerator Card with Arria 10 1150GX support DDR4 2400Hz 8GB, PCIe Gen3 x8 interface, RoHS
Mustang-V100-MX8-R11	Computing Accelerator Card with 8 x Movidius Myriad X MA2485 VPU, PCIe Gen2 x4 interface, RoHS

Peripheral Options

Part No.	Description
IPCIE-4POE-R10	PCI Express Power over ethernet card, 4-port 1000 Base(T), 802.3af compliant, RoHS
72213100-5010000-000-RS	2.5" HDD;WD;Caviar Blue;WD10SPZX;SATA3.0(6Gb/s, 600MB/s);1TB;128MB;5400 RPM;NoAssign;NoAssign;;CCL;RoHS

Packing List

1 x Chassis Screw	1 x 150W Adapter
1 x Mounting Bracket	1 x Power Cord
1 x QSG	

Fully integrated I/O

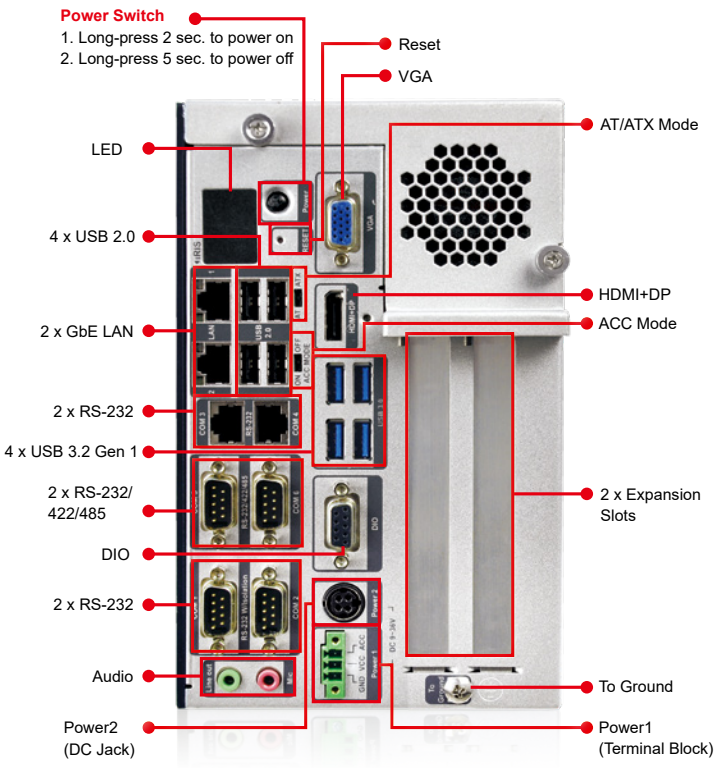

Dimensions (Unit:mm)

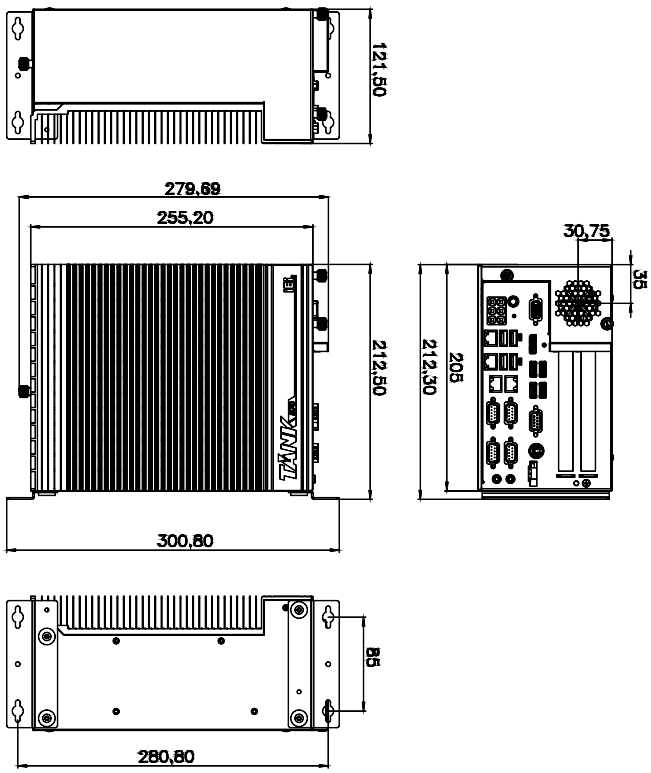

FLEX-BX200AI

2U AI Modular PC with 8th/9th Generation LGA 1151 Intel® Core™ i and Xeon® Processor



Feature

- 2U AI Modular PC with 8th/9th Generation LGA 1151 Intel® Core™/Xeon® processor with Intel® Q370/C246 chipset and DDR4 memory
- Four hot-swappable and accessible HDD drive bays, support RAID 0/1/5/10
- Support PCIe 3.0 by 4 and PCIe 3.0 by 8 slots
- M.2 2280 PCIe Gen 3.0 x4 NVMe™ SSD support
- Dual independent display with high resolution support
- Rich high-speed I/O interfaces on one side for easy installation
- Support for optional Mustang-V100-MX8 PCIe Accelerator Card for offloading AI/DL workloads
- Support Wi-FI 802.11 AC dual and Bluetooth V5.1 (pre-installed)

Specifications

Model		FLEX-BX200AI Series
System	CPU	Intel® Xeon® E-2278GEL 2.0GHz (up to 3.9GHz, 8-core, TDP 35W) Intel® 9th Generation Core™ i7-9700TE 1.8GHz (up to 3.8GHz, 8-core, TDP 35W) Intel® 9th Generation Core™ i5-9500TE 2.2GHz (up to 3.6GHz, 6-core, TDP 35W) Intel® 8th Generation Core™ i5-8500 3.0GHz (up to 4.1GHz, 6-core, TDP 65W)
	Chipset	Intel® C240 Series Chipsets C246 (Coffee Lake) Intel® 300 Series Chipsets Q370 (Coffee Lake)
	Memory	2 x 288-pin 2666/2400 MHz dual-channel DDR4 unbuffered DIMM supporting up to 64GB
	Graphics Engine	Intel® HD Graphics Gen 9 Engines with 16 low-power execution units, supporting DX2015, OpenGL 5.X and OpenCL2.x, ES 2.0
	Ethernet	LAN1: Intel® I219LM with Intel® AMT 11.0 supported LAN2: Intel® I210 PCIe controller
Storage		4 x Accessible 2.5” SATA 6Gb/s HDD/SSD bay (with RAID 0/1/5/10 support, LED indicator, pre-installed 1TB HDD) 1 x NGFF M.2 (2280) M-Key socket (supports NVMe SSD)
Wireless Communication	WLAN	Intel® Wireless-AC 9260 802.11ac, 2.4/5GHz (by M.2 2230)
	Bluetooth	Bluetooth V5.1
	WWAN and GNSS	M.2 3042 LTE (optional)
I/O Ports and Switches		2 x HDMI output 2 x GbE LAN (1x I219 support vPro, 1x I210) 6 x USB 3.2 Gen1 Type-A 2 x RS-232 DB-9 1 x Mic in 1 x Line out 1 x AC inlet 4 x SMA Power button with power LED (power on=Blue) AT/ATX mode switch Reset button
TPM		TPM 2.0
Expansion Slots		2 x PCIe 3.0 x8 1 x PCIe 3.0 x4 1 x M.2 B-Key 2242 socket (with SIM slot for 3G/LTE, supports PCIe 3.0 x1 & USB 3.2 Gen1) 1 x M.2 M-Key 2280 socket (supports PCIe 3.0 x4)
Thermal Solution		3 x System fan, 1 x CPU cooler
Power Supply		AC input ATX power supply - 350W power supply - Input: 90VAC~264VAC, 50/60Hz - Output (max.): 3.3V@14A, 5V@16A, 12V@29A, -12V@0.3A
Watchdog Timer		Software programmable support 1~255 sec. system reset
Construction	Chassis Construction	Metal housing
	Mounting	Wall/Rack mount
	Color	Black
	Dimensions (LxDxH) (mm)	357 x 230 x 88
	Net Weight	4 kg
Environmental	Operating Temperature	-10°C ~ 50°C
	Storage Temperature	-20°C ~ 60°C
	Operating Humidity	5% ~95%, non-condensing
	Vibration	5~17Hz, 0.1 double amplitude displacement 17~640Hz 1.5G acceleration peak to peak
	Shock	10G acceleration part to part (11ms)
	Safety/EMC	CE/FCC/RoHS

Ordering Information

Part No.	Description
FLEX-BX200AI-XER/32G-R10	2U AI Modular Box PC, 9th Gen Intel® Xeon® E-2278GEL 2.0GHz (Up to 3.9GHz, 8-core, TDP 35W), 32GB DDR4, 2.5" 1TB HDD , TPM 2.0, 350W PSU, R10
FLEX-BX200AI-XER/32G/V-R10	2U AI Modular Box PC, 9th Gen Intel® Xeon® E-2278GEL 2.0GHz (Up to 3.9GHz, 8-core, TDP 35W), 32GB DDR4, 2.5" 1TB HDD , TPM 2.0, 350W PSU, with Mustang-V100-MX8, R10
FLEX-BX200AI-i7R/16G-R10	2U AI Modular Box PC, 9th Gen Intel® Core™ i7-9700TE 1.8GHz (Up to 3.8GHz, 8-core, TDP 35W), 16GB DDR4, 2.5" 1TB HDD , TPM 2.0, 350W PSU, R10
FLEX-BX200AI-i7R/16G/V-R10	2U AI Modular Box PC, 9th Gen Intel® Core™ i7-9700TE 1.8GHz (Up to 3.8GHz, 8-core, TDP 35W), 16GB DDR4, 2.5" 1TB HDD , TPM 2.0, 350W PSU, with Mustang-V100-MX8, R10
FLEX-BX200AI-i5R/8G-R10	2U AI Modular Box PC, 9th Gen Intel® Core™ i5-9500TE 2.2GHz (Up to 3.6GHz, 6-core, TDP 35W), 8GB DDR4, 2.5" 1TB HDD , TPM 2.0, 350W PSU, R10
FLEX-BX200AI-i5R/8G/V-R10	2U AI Modular Box PC, 9th Gen Intel® Core™ i5-9500TE 2.2GHz (Up to 3.6GHz, 6-core, TDP 35W), 8GB DDR4, 2.5" 1TB HDD , TPM 2.0, 350W PSU, with Mustang-V100-MX8, R10
FLEX-BX200AI-i5/8G-R10	2U AI Modular Box PC, 8th Gen Intel® Core™ i5-8500 3.0GHz (Up to 4.1GHz, 6-core, TDP 65W), 8GB DDR4, 2.5" 1TB HDD , TPM 2.0, 350W PSU, R10
FLEX-BX200AI-i5/8G/V-R10	2U AI Modular Box PC, 8th Gen Intel® Core™ i5-8500 3.0GHz (Up to 4.1GHz, 6-core, TDP 65W), 8GB DDR4, 2.5" 1TB HDD , TPM 2.0, 350W PSU, with Mustang-V100-MX8, R10

Packing List

Item	Q'ty	Remark
32702-000200-100-RS	1	European power cord, 1830mm
41020-0521C2-00-RS	2	wall mount kit, black
44035-040062-RS	4	M4*6 oval head screw for wall mount kit, black
	1	Key for HDD cover
	2	Wi-Fi Antenna

Options

Part No.	Description
FLEX-BXRK-R10	Rack mount kit





I/O Interface

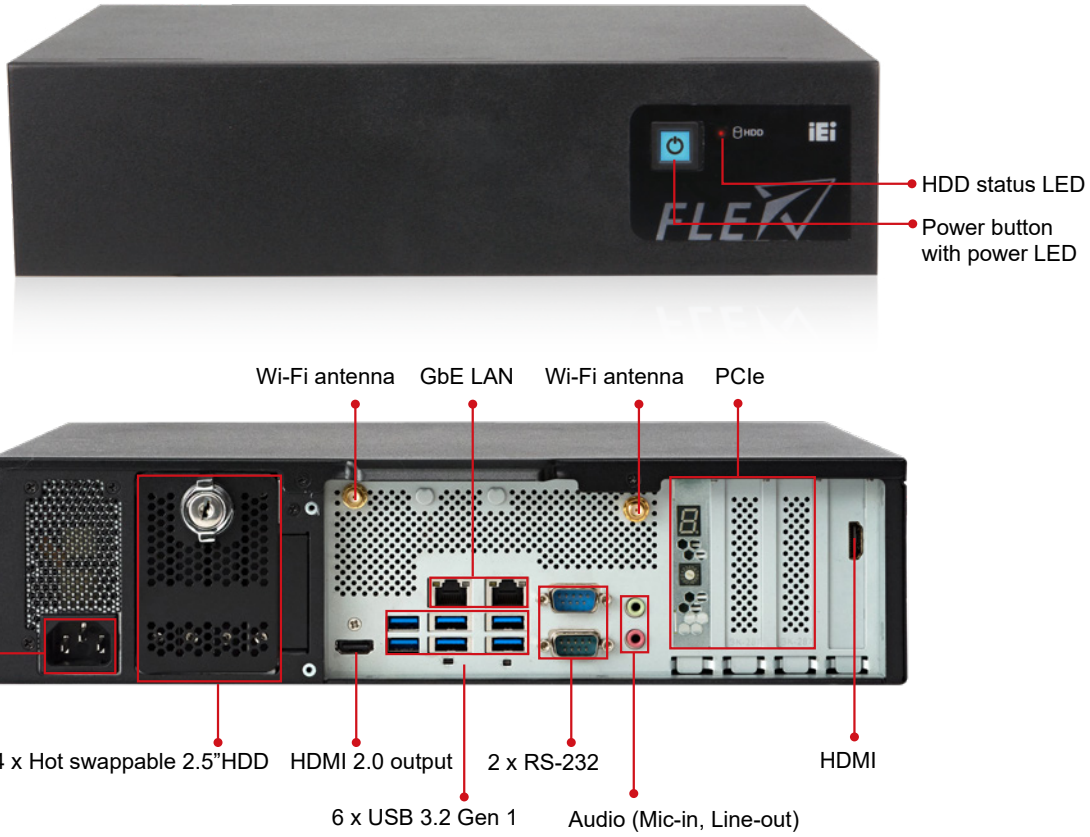

FLEX-BX200AI
Dimensions (Unit: mm)

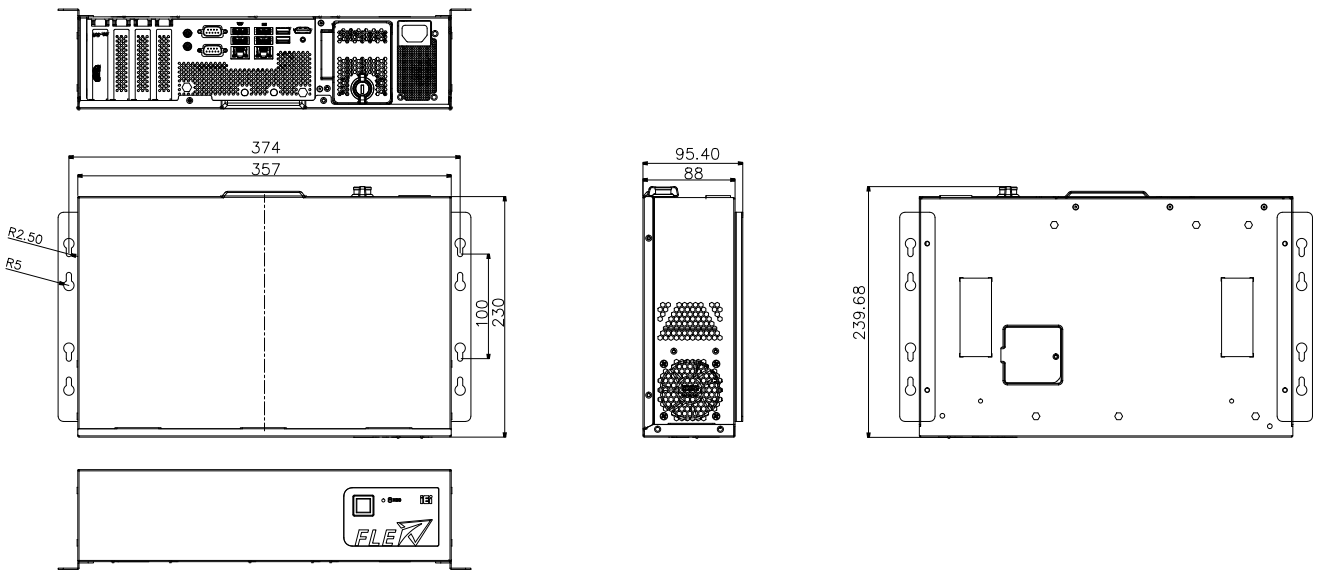

FLEX-BX210-Q470/W480

NEW



Feature

- 2U AI PC with 10th Generation LGA 1200 Intel® Core™/Xeon® processor with Intel® Q470/W480 chipset and DDR4 memory
- Four hot-swappable and accessible HDD drive bays support RAID 0/1/5/10
- Support PCIe 3.0 by 4 and PCIe 3.0 by 8 slots
- M.2 2280 PCIe 3.0 x4 NVMe™ SSD support
- Dual independent display with high resolution support
- TPM data protection and reliable authentication
- Support for optional Mustang series PCIe Accelerator Card for offloading AI/DL workloads

intel partner Titanium

Specifications

Model		FLEX-BX210-Q470/W480
System	CPU	Intel® Xeon® W-1290TE 1.8GHz (up to 4.5GHz, 10-core, TDP 35W) Intel® 10th Generation Core™ i9-10900TE 1.8GHz (up to 4.5GHz, 10-core, TDP 35W) Intel® 10th Generation Core™ i5-10500TE 2.3GHz (up to 3.7GHz, 6-core, TDP 35W)
	Chipset	Intel® 400 Series Chipsets (Comet Lake)
	Memory	2 x 288-pin 2933/2666 MHz dual-channel DDR4 unbuffered DIMM supporting up to 64GB Xeon W with 32GB RAM Pre-installed Core i9 with 16GB RAM Pre-installed Core i5 with 8GB RAM Pre-installed
	Graphics Engine	Intel® HD Graphics Gen 9.5 Engines with Low power 16 execution unit, supports DX2015, OpenGL 5.X and OpenCL2.x, ES 2.0
	Ethernet	LAN1: Intel® I219LM with Intel® AMT 11.0 supported LAN2/LAN3: Intel® I210 PCIe controller
	Storage	4 x accessible 2.5" HDD/SSD SATA 6 Gb/s bay (with RAID 0/1/5/10 support) with LED indicator 1 x NGFF M.2(2280) M Key socket (support NVMe SSD) Pre-installed 1 x 2.5" 1TB HDD
Wireless Communication	WLAN	Intel® AC 9260 802.11ac, 2.5/5GHz, 2T/2R (by M.2 2230)
	Bluetooth	Bluetooth V5.1
	WWAN and GNSS	M.2 3042 LTE (optional)
I/O Ports and Switches	I/O Ports and Switches	1 x Display port output 1 x HDMI output 1 x Line out 1 x AC inlet 2 x RS-232 DB-9 1 x Mic in 4 x SMA 6 x USB 3.2 Gen1 Type-A 3 x GbE LAN (1x I219 support vPro, 2x I210) Power button with power LED (power on=Blue) AT/ATX mode switch Reset button
	TPM	TPM 2.0 (pre-installed)
Expansion Slots		2 x PCIe 3.0 x8 2 x PCIe 3.0 x4 1 x M.2 B-Key 2242 socket (with SIM slot for 3G/LTE, supports PCIe 3.0 x1 & USB 3.2 Gen1) 1 x M.2 M-Key 2280 socket (supports PCIe 3.0 x4)
Thermal Solution		3 x System fan, 1 x CPU cooler
Power supply		AC input ATX power supply - 350W Power supply - Input: 90VAC~264VAC, 50/60Hz - Output (max.): 3.3V@14A, 5V@16A, 12V@29A, -12V@0.3A
Watchdog Timer		Software programmable support 1~255 sec. system reset
Construction	Chassis Construction	Metal housing
	Mounting	Wall/Rack mount
	Color	Black
	Dimensions (LxDxH) (mm)	357 x 230 x 88
	Net Weight	4 kgs
Environmental	Operating Temperature	-10°C ~ 50°C
	Storage Temperature	-20°C ~ 60°C
	Operating Humidity	5% ~95%, non-condensing
	Vibration	5~17Hz, 0.1 double amplitude displacement 17~640Hz 1.5G acceleration peak to peak
	Shock	10G acceleration part to part (11ms)
	Safety/EMC	CE/FCC/RoHS

Ordering Information

Part No.	Description
With Mustang-V100-MX8	
FLEX-BX210AI-XE/32G/V-R10	2U AI Modular box PC, Intel® Xeon® W-1290TE 1.8GHz (up to 4.5GHz, 10-core, TDP 35W), 32GB DDR4, 2.5" 1TB HDD, TPM 2.0, 350W PSU, with Mustang-V100-MX8, Wi-Fi 802.11ac, R10
FLEX-BX210AI-i9/16G/V-R10	2U AI Modular box PC, Intel® 10th Generation Core™ i9-10900TE 1.8GHz (up to 4.5GHz, 10-core, TDP 35W), 16GB DDR4, 2.5" 1TB HDD, TPM 2.0, 350W PSU, with Mustang-V100-MX8, Wi-Fi 802.11ac, R10
FLEX-BX210AI-i5/8G/V-R10	2U AI Modular box PC, Intel® 10th Generation Core™ i5-10500TE 2.3GHz (up to 3.7GHz, 6-core, TDP 35W), 8GB DDR4, 2.5" 1TB HDD, TPM 2.0, 350W PSU, with Mustang-V100-MX8, Wi-Fi 802.11ac, R10
Without Mustang-V100-MX8	
FLEX-BX210AI-XE/32G-R10	2U AI Modular box PC, Intel® Xeon® W-1290TE 1.8GHz (up to 4.5GHz, 10-core, TDP 35W), 32GB DDR4, 2.5" 1TB HDD, TPM 2.0, 350W PSU, Wi-Fi 802.11ac, R10
FLEX-BX210AI-i9/16G-R10	2U AI Modular box PC, Intel® 10th Generation Core™ i9-10900TE 1.8GHz (up to 4.5GHz, 10-core, TDP 35W), 16GB DDR4, 2.5" 1TB HDD, TPM 2.0, 350W PSU, Wi-Fi 802.11ac, R10
FLEX-BX210AI-i5/8G-R10	2U AI Modular box PC, Intel® 10th Generation Core™ i5-10500TE 2.3GHz (up to 3.7GHz, 6-core, TDP 35W), 8GB DDR4, 2.5" 1TB HDD, TPM 2.0, 350W PSU, Wi-Fi 802.11ac, R10

Packing List

1 x Mounting Bracket	2 x Wi-Fi Antennas
1 x Power Cord	1 x QSG

I/O Interface

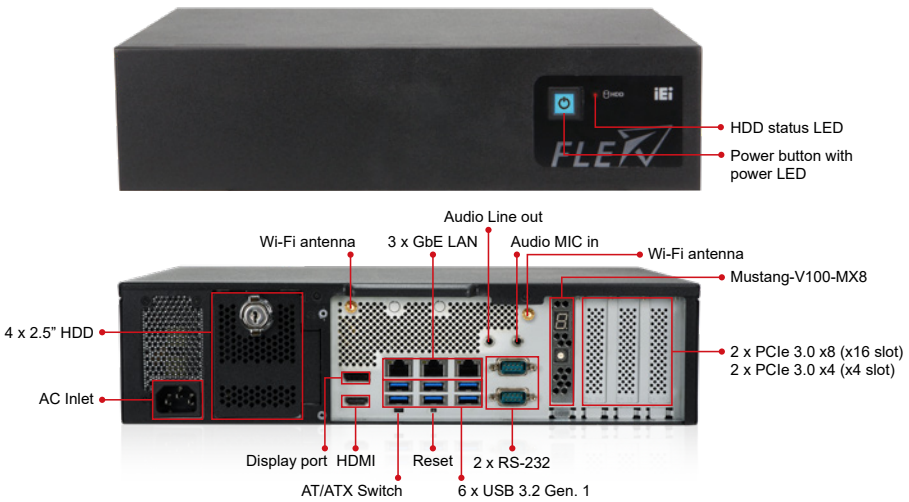

FLEX-BX210-Q470/W480

Dimensions (Unit: mm)

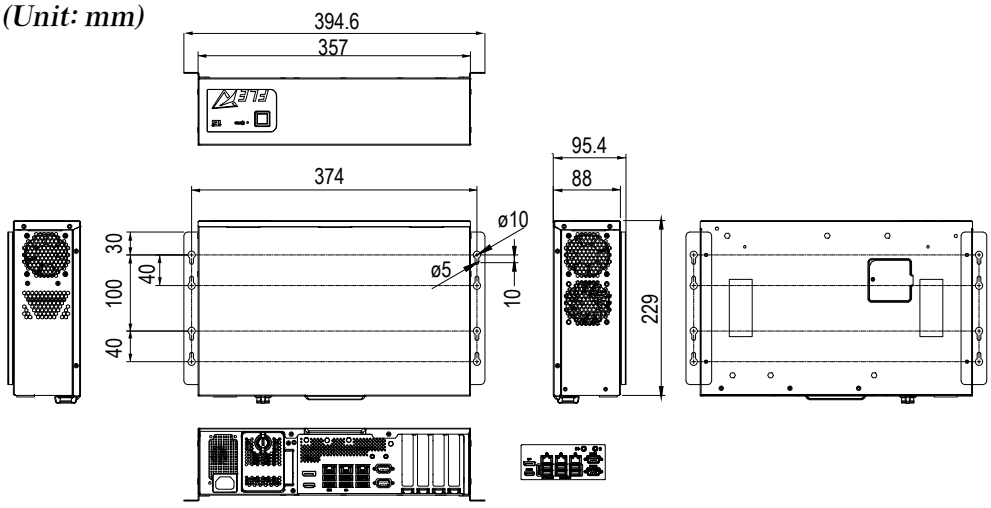

Hardware Features

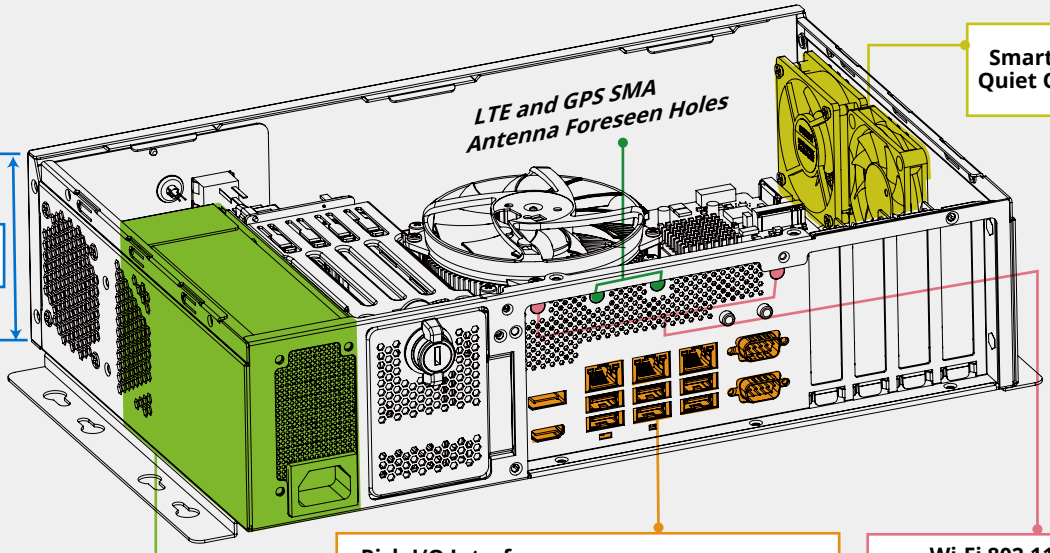

Smart Fan for Quiet Operation

Compact 2U System

350W ATX Power Supply
- Active PFC (Power Factor Correction) circuit protection
- 80-Plus Gold high efficiency
- 350W PSU models is built to order

Rich I/O Interface
- 1 x Display port output
- 1 x HDMI output
- 6 x USB 3.2 Gen1 Type-A
- 2 x RS-232 DB-9
- AT/ATX mode switch
- 3 x GbE LAN (1x I219 support vPro, 2x I210)
- 1 x Mic in
- 1 x Line out
- 1 x AC inlet
- 4 x SMA
- Reset button

Wi-Fi 802.11ac and Bluetooth V5.1 SMA Antenna Connectors

Up to 64GB DDR4 2933/2666 MHz Memory

10th Generation Intel® Core™ Desktop Processors

TPM 2.0

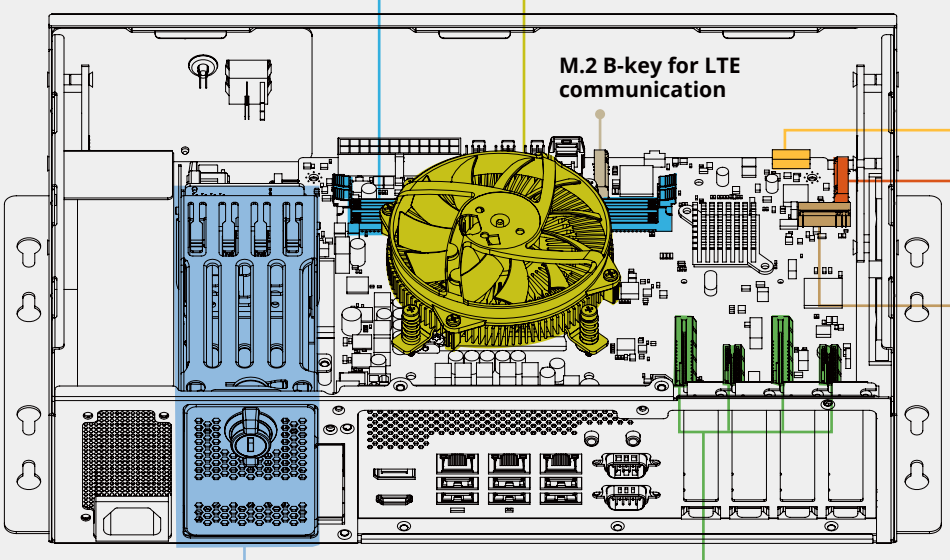

M.2 B-key for LTE communication

M.2 A-key 2230 for Wi-Fi 802.11ac and Bluetooth V5.1 (pre-installed)

M.2 M-key

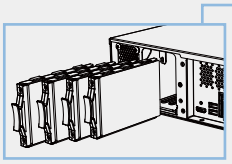

Four Hot-swappable HDD Bays (pre-installed with 1TB HDD)
- With security key lock
- Support RAID 0/1/5/10
- LEDs for drive activity

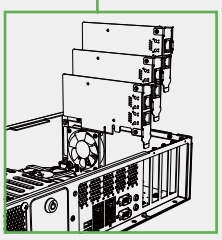

Four PCIe 3.0 Low Profile Expansion Slots
- Two PCIe by 4 and two PCIe by 8 with vertical heat dissipation, and the two PCIe by 8 provide zero latency
- Support AI accelerator cards, such as FPGA card, vision process card (VPU), etc

IDS-310AI

- Ultra Compact Size
- Fanless Digital Signage System
- Intel Vision Accelerator Design for AI Deep Learning

NEW



Feature

- Intel® Celeron® J3455 1.5GHz (up to 2.3 GHz)
- Two GbE LAN ports
- Triple USB 3.2 Gen1
- M.2 A-key slot for expansion
- Pre-installed a Mustang-MPCIE-MX2 that has two Intel Myriad X VPUs for AI deep learning workload consolidation

Specifications

Model		IDS-310AI
AI Accelerator Card	Model Name	Mustang-MPCIE-MX2
	Main Chip	2 x Intel® Movidius™ Myriad™ X MA2485 VPU
	Supported Topology	AlexNet, GoogleNetV1/V2, Mobile_SSD, MobileNetV1/V2, MTCNN, Squeezenet1.0/1.1, Tiny Yolo V1 & V2, Yolo V2, ResNet-18/50/101
Chassis	Color	Brown & Silver
	Dimensions (WxDxH)(mm)	137 x 102.8 x 49.2
	System Fan	Fanless
	Chassis Construction	Extruded aluminum alloy
Motherboard	CPU	Intel® Celeron® J3455 (up to 2.3GHz, quad-core, TDP 10W)
	Chipset	SoC
	System Memory	1 x 204-pin DDR3L SO-DIMM slot, pre-installed with 8 GB memory
Storage	SATADOM	Pre-installed 128GB
	Micro SD	1 x Micro SD Slot
I/O Interfaces	USB 3.2 Gen 1 (5Gb/s)	3
	Ethernet	2 x RJ-45 PCIe GbE by RTL8111 controller
	COM Port	1 x RS-232/422/485 with AFC
	Display	3 x HDMI 1.4b (3840x2160@30Hz)1, 2
	Audio	1 x Line-out, 1 x Mic-in
	Wireless	1 x 802.11a/b/g/n/ac (optional)
	TPM	TPM2.0
	Others	1 x Power button, 1 x Reset button, 1 x AT/ATX switch, 1 x LED for HDD (yellow), 1 x LED for power (green)
Expansions	M.2	1 x 2230 A key (PCIe x1/ USB 2.0)
Power	Power Input	12V DC-in
	Power Consumption	12V @ 2.6A (Intel® Celeron® J3455 with 8GB memory)
Reliability	Mounting	Wall mount
	Operating Temperature	-20°C ~ 45°C with air flow, 10% ~ 95%, non-condensing
	Storage Temperature	-30°C ~ 80°C with air flow, 10% ~ 90%, non-condensing
	Operating Shock	Half-sine wave shock 5G, 11ms, 100 shocks per axis, IEC68-2-27
	Operation Vibration	MIL-STD-810G 514.6C-1
	Weight (Net/Gross)	910 g/ 1.7 kg
	Safety / EMC	CE/FCC
	Watchdog Timer	Programmable 1 ~ 255 sec/min
OS	Supported OS	Win10/Linux

[1] Due to chipset limitation, audio is not supported over the HDMI3 connector.
[2] Fully support of triple 4K display output may vary in different system environment setting. Contact an IEI sales representative for detailed information.

Ordering Information

Part No.	Description
IDS-310AI-AL-J1/8GB-R10	Fanless embedded system with Intel® Celeron® J3455 1.5GHz (up to 2.3GHz, quad dore, TDP 10W), pre-installed 8GB DDR3L memory, triple HDMI display, 12V DC, 128G SATADOM, Mustang-MPCIE-MX2 and RoHS

Packing List

1 x Screw kit	1 x 36W power adapter
1 x Wall mounting bracket	1 x Power Cord

Options

Item	Part No.	Description
Wi-Fi Module	27319-000009-RS*	Wireless Lan Module; Wireless LAN & Bluetooth M.2 Module; Sparklan; R9701810011;IEEE802.11a/b/g/n/ac;2.412GHz~2.4835GHz, 5.15GHz~5.85GHz; M.2 2230; 3.3V; 22*30*2.15mm; QCNFA364A; QCA6174A-5; 2x2 MIMO; Dual Band; WCBN808A-Q2; CCL;CCL; RoHS
Antenna	32505-000900-100-RS*	External Antenna; WLAN;RG 178; 108MM;TANK-700-QM67-R10; PEAK GAIN 2.0DBI; Exceltek; 2.4-2.5GHz/5.15-5.85GHz; REVERSE SMA PLUG;RoHS
RF Cable	32501-004000-100-RS*	RF; RF CABLE; LINE DIAMETER: 0.81mm; 250MM; 50Ω;Sparklan; 0-6GHz; VSWR≤1.3;I-PEX MHF-4 Plug; REVERSE SMA JACK;NUT*1;WASHER*1; RoHS

* Each Wi-Fi module needs two antennas and two RF cables to fully support Wi-Fi function.

Fully Integrated I/O

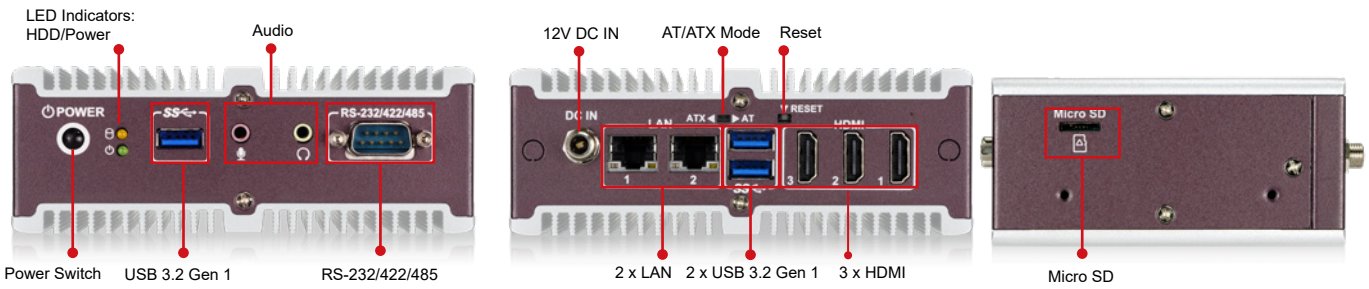

IDS-310AI Dimensions (Unit: mm)

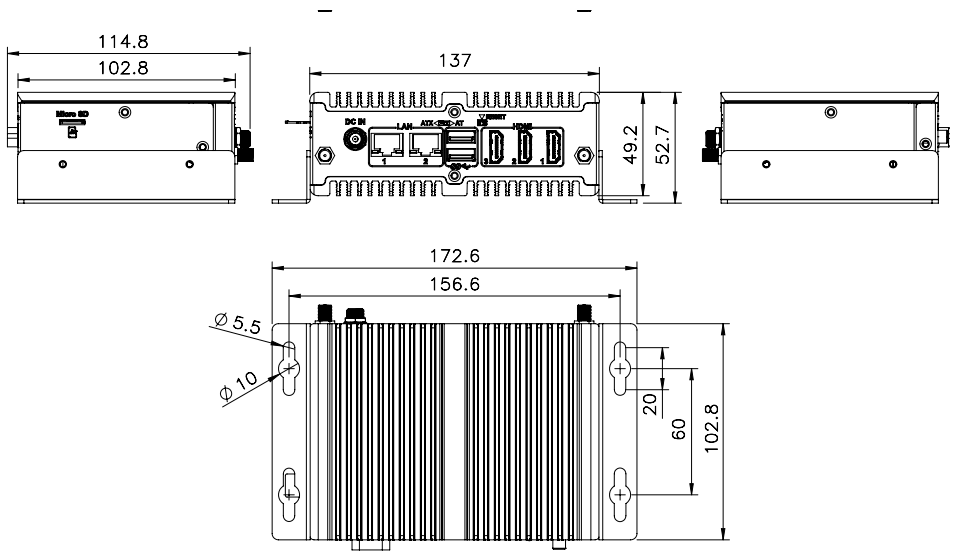

ITG-100AI

- Ultra Compact Size
- Fanless Digital Signage System
- Intel Vision Accelerator Design for AI Deep Learning



Feature

- Intel® Atom™ x5-E3930 1.3GHz (up to 1.8 GHz)
- Two GbE LAN ports
- Two RS-232/422/485
- M.2 A-key slot for expansion
- Pre-installed a Mustang-MPCIE-MX2 that has two Intel Myriad X VPUs for AI deep learning workload consolidation

Specifications

Model		ITG-100AI
AI Accelerator Card	Model Name	Mustang-MPCIE-MX2
	Main Chip	2 x Intel® Movidius™ Myriad™ X MA2485 VPU
	Supported Topology	AlexNet, GoogleNetV1/V2, Mobile_SSD, MobileNetV1/ V2, MTCNN, Squeezenet1.0/1.1, Tiny Yolo V1 & V2, Yolo V2, ResNet-18/50/101
Chassis	Color	Blue & Silver
	Dimensions (WxDxH)(mm)	137 x 102.8 x 49.4
	System Fan	Fanless
	Chassis Construction	Extruded aluminum alloy
Motherboard	CPU	Intel® Atom™ x5-E3930 1.3 GHz (up to 1.8 GHz, dual-core, TDP 6.5W)
	Chipset	SoC
	System Memory	1 x SO-DIMM DDR3L 1600/1867 (8GB pre-installed)
Storage	SATADOM	1 x 128GB pre-installed
	eMMC	1 x eMMC5.0 (up to 32GB)(optional)
	Micro SD	1 x Micro SD slot
I/O Interfaces	USB	2 x USB 3.2 Gen1
	Ethernet	2 x RJ-45: 2 x GbE by Intel® I211
	COM Port	2 x RS232/422/485 with AFC (DB9/RJ45)
	Display	1 x VGA (up to 1920 x 1080@60Hz)
	Wireless	1 x 802.11a/b/g/n/ac (optional)
	Other	1 x Power Button, 1 x Reset Button, 1 x AT/ATX Switch, 1 x LED for Power (Green), 1 x LED for HDD (Yellow)
Expansions	M.2	1 x 2230 A-key (PCIe x 1/USB 2.0)
Power	Power Input	Terminal block: 9 ~ 36V DC
	Power Consumption	12V @ 1.2A (Intel® Atom™ E3930 with 8GB memory)
Reliability	Mounting	DIN-Rail
	Operating Temperature	-20°C ~ 50°C with air flow, 10% ~ 95% non-condensing
	Storage Temperature	-20°C ~ 70°C with air flow, 10% ~ 90% non-condensing
	Operating Shock	Half-sine wave shock 5G, 11ms, 100 shocks per axis (SSD)
	Operating Vibration	MIL-STD-810G 514.6C-1 (SSD)
	Weight (Net/Gross)	895g/ 1.7kg
	Safety/EMC	CE/ FCC
	Watchdog Timer	Programmable 1 ~ 255 sec/min
OS	Supported OS	Microsoft® Windows 10, Linux Ubuntu 16.04 LTS

Ordering Information

Part No.	Description
ITG-100AI-E1/8GB/S-R10	Fanless embedded system, Intel® Apollo Lake x5-E3930 1.3GHz (up to 1.8GHz, dual core), 8GB DDR3L pre-installed memory, VGA, M.2, COM, 9-36V DC, Mustang-MPCIE-MX2 and RoHS

Packing List

1 x 36W power adapter	1 x Screw kit
1 x Power cable	1 x Din-rail mounting bracket
1 x Power Cord	1 x RJ-45 to DB-9 COM port cable

Options

Item	Part No.	Description
Wi-Fi Module	27319-000009-RS*	Wireless Lan Module; Wireless LAN & Bluetooth M.2 Module; Sparklan; R9701810011;IEEE802.11a/b/g/n/ac;2.412GHz~2.4835GHz, 5.15GHz~5.85GHz; M.2 2230; 3.3V; 22*30*2.15mm; QCNFA364A; QCA6174A-5; 2x2 MIMO; Dual Band; WCBN808A-Q2; CCL;CCL; RoHS
Antenna	32505-000900-100-RS*	External Antenna; WLAN;RG 178; 108MM;TANK-700-QM67-R10; PEAK GAIN 2.0DBI; Exceltek; 2.4-2.5GHz/5.15-5.85GHz; REVERSE SMA PLUG;RoHS
RF Cable	32501-004000-100-RS*	RF; RF CABLE; LINE DIAMETER: 0.81mm; 250MM; 50Ω;Sparklan; 0-6GHz; VSWR≤1.3;I-PEX MHF-4 Plug; REVERSE SMA JACK;NUT*1;WASHER*1; RoHS

* Each Wi-Fi module needs two antennas and two RF cables to fully support Wi-Fi function.

Fully Integrated I/O

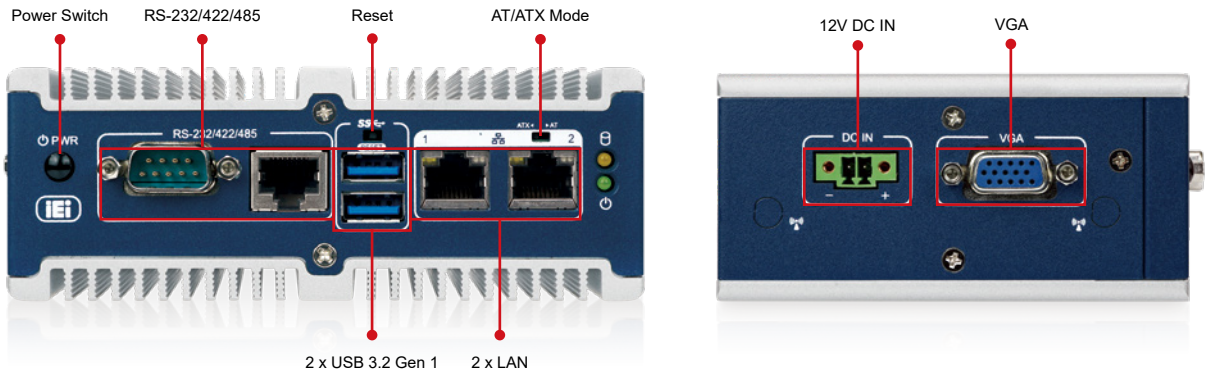

ITG-100AI Dimensions (Unit: mm)

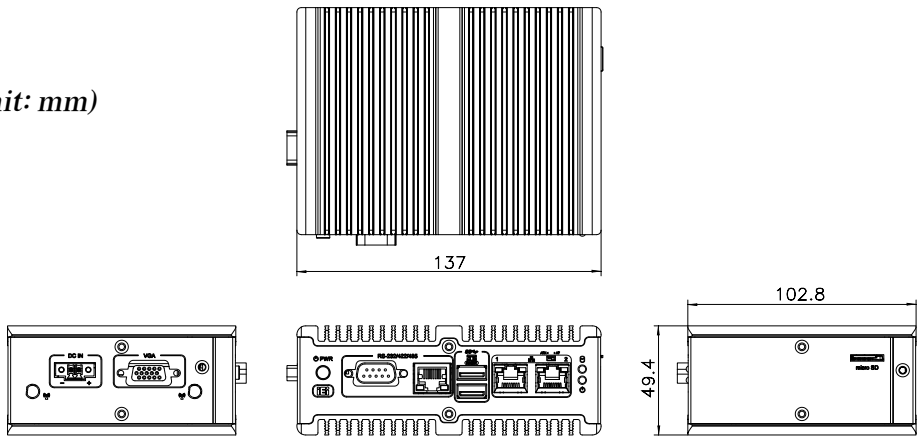

DRPC-230-ULT5

- Fanless DIN-Rail Embedded System
- Whiskey Lake 8th Intel® CoreTM Solution (up to 4 cores)

NEW



Features

- Intel® Core™ i5-8365UE/ Celeron™4205U
- Triple GbE LAN Ports
- Multiple USB 3.2 Gen 2 (10Gb/s)
- Multiple COM Ports
- Modulized Flexible Expansion

Specifications

Model		DRPC-230-ULT5-i5/S	DRPC-230-ULT5-i5	DRPC-230-ULT5-CS
Chassis	Color	Black & Silver		
	Dimensions (WxDxH)	81 x 150 x 190	127 x 150 x 190	81 x 150 x 190
	System Fan	Fanless		
	Chassis Construction	Extruded aluminum alloy		
Motherboard	CPU	Intel® Core™ i5-8365UE 1.6 GHz (up to 4.1 GHz, quad-core, TDP 15W)		Intel® Celeron™ 4205U 1.8 GHz (dual-core, TDP 15W)
	Chipset	SoC		
	System Memory	2 x SO-DIMM DDR4 2400 (8GB pre-installed)		
Storage	Hard Drive	1 x 2.5'' SATA 6Gb/s HDD/SSD bay		
I/O Interfaces	USB	6 x USB 3.2 Gen2		4 x USB 3.2 Gen2 / 2 x USB 2.0
	Ethernet	3 x RJ-45: 1 x GbE by Intel® I219 / 2 x GbE by Intel® I210		
	COM Port	4 x RS232/422/485 with AFC (DB9) 2 x RS232 (RJ-45)		
	Digital I/O	8-bit Digital I/O (4-in/ 4-out) (pin header)		
	Display	1 x HDMI (up to 3840 x 2160@30Hz) 1 x DP (up to 4096 x 2304@60Hz)		
	Wireless	1 x 802.11a/b/g/n/ac (optional)		
	TPM	1 x TPM 2.0 (2 x 10 pin)(optional)		
	Other	1 x Power Button, 1 x Reset Button, 1 x AT/ATX Switch, 1 x LED for Power (Green), 1 x LED for HDD (Yellow)		
Expansions	PCIe Mini	1 x Full-size with SIM card slot (PCIe/USB 3.0/SATA)		
	M.2	1 x 2230 A-key (PCIe x 1/USB 2.0)		1 x 2230 A-key (PCIe x 1)
	Backplane	-	1 x PCIe Gen3 x 4, 1 x USB 2.0	-
Power	Power Input	Terminal block: 12 ~ 24V DC (Reserved internal 40W power with 12V DC output)		
	Power Consumption	12V @ 4.98A (Intel® CoreTM i5-8365UE with 8GB memory)		
Reliability	Mounting	DIN-Rail		
	Operating Temperature	-20°C ~ 70°C with air flow (SSD), 10% ~ 95% non-condensing*		
	Storage Temperature	-40°C ~ 85°C with air flow (SSD), 10% ~ 95% non-condensing		
	Operating Shock	Half-sine wave shock 5G, 11ms, 100 shocks per axis (SSD)		
	Operating Vibration	MIL-STD-810G 514.6C-1 (SSD)		
	Weight (Net/Gross)	2.9KG/ 3.2KG	3.2KG/ 3.5KG	2.9KG/ 3.2KG
	Safety/EMC	CE/ FCC		
	Watchdog Timer	Programmable 1 ~ 255 sec/min		
OS	Supported OS	Microsoft® Windows 10, Linux		

*CPU does not throttle under 60°C

Ordering Information

Part No.	Description
DRPC-230-ULT5-i5/8G/S-R11	Fanless embedded system, Intel® Whiskey Lake i5-8365UE 1.6GHz (quad core, TDP 15W), 8GB DDR4 pre-installed memory, HDMI/DP, 3 PCIe GbE, 6 COM, 12~24V DC and RoHS
DRPC-230-ULT5-i5/8G-R11	Fanless embedded system, Intel® Whiskey Lake i5-8365UE 1.6GHz (quad core, TDP 15W), 8GB DDR4 pre-installed memory, HDMI/DP, 3 PCIe GbE, 6 COM, 12~24V DC, PCIe x4 expansion layer and RoHS
DRPC-230-ULT5-C/8G/S-R11	Fanless embedded system, Intel® Whiskey Lake Celeron™ 4205U 1.8GHz (dual core, TDP 15W), 8GB DDR4 pre-installed memory, HDMI/DP, 3 PCIe GbE LAN, 6 COM, 12~24V DC and RoHS

Packing List

1 x Din-rail mounting kit
1 x Screw kit

Options

Item	Part No.	Description
Adapter[1]	63040-010060-211-RS	Adapter Power;FSP;FSP060-DHAN3;9NA0608097;;Vin:90~264VAC;60W;Dim:62.0*110*31.5mm;Plug=7.5mm;Cable=1200mm;Erp(NO LOAD 0.21W);Vout:12VDC;Φ2.5/Φ5.5/lock;CCL;RoHS
Adapter[1/2]	63040-010096-230-RS	Adapter Power;FSP;FSP096-AHAN3;9NA0961412 ;Active PFC;Vin:90~264VAC;96W;Dim:75.6 x 151.3 x 25.4mm;Plug=7.5mm;Cable=1500mm;Erp(NO LOAD 0.15W);Vout:12VDC;Φ2.5/Φ5.5/lock;CCL;RoHS
Power cable[1]	32102-026500-100-RS	WIRE CABLE;POWER CABLE;;2;200MM;18AWG;(A)DC JACK 5.5 x 2.5, NUT+WASHER;(B)TERMINAL BLOCK:3P P=3.5;SHANGHAI YING YU;RoHS
Power cord	32000-000002-RS	European power cord
RJ-45 to D-SUB cable	32005-004600-200-RS	ROUND CABLE;RS-232/422/485;RS-232 CABLE;2;300MM;26AWG;(A) D-SUB 9P MALE+4#40 Screw;(B)RJ-45 8P8C PLUG, Iron+Sheathed;Wins Precision;RoHS
Wifi module[3]	27319-000009-RS	Wireless Lan Module;Wireless LAN & Bluetooth M.2 Module;Sparklan;R9701810011;IEEE802.11a/b/g/n/ac;2.412GHz~2.4835GHz, 5.15GHz~5.85GHz;M.2 2230;.;3.3V;22 x 30 x 2.15mm;QCNFA364A;QCA6174A-5;2x2 MIMO;Dual Band;WCBN808A-Q2;CCL;CCL;RoHS
Antenna[3]	32505-000900-100-RS	External Antenna;WLAN;RG 178;108MM;TANK-700-QM67-R10;PEAK GAIN 2.0DBI;Exceltek;2.4-2.5GHz/5.15-5.85GHz;REVERSE SMA PLUG;RoHS
RF cable[3]	32501-004000-100-RS	RF;RF CABLE;LINE DIAMETER:0.81mm;250MM;50Ω;Sparklan;0-6GHz;VSWR≤1.3;I-PEX MHF-4 Plug;REVERSE SMA JACK;NUT x 1;WASHER x 1;RoHS
TPM Module	TPM-IN03-R10	20-pin Infineon SPI TPM 2.0 module, software mangement tool, firmware V7.63
System fan[4]	31100-000365-RS	FAN;+12V;4PIN;YEN SUN;40 x 40 x 10mm;6500RPM;TWO BALL BEARING;LINE LENGTH:150MM;3.4+/-0.1MM;FD124010HB;FD124010HB-NBG(2W7T);AXIAL FAN;WITH FRAME;6.599CFM;7~13.2V;29dB;75000hur;UL, CUL, TUV;CCL;RoHS
Accelerator cards[4]	Mustang-V100-MX8	Computing Accelerator Card with 8 x Movidius Myriad X MA2485 VPU, PCIe Gen2 x 4 interface, RoHS
	Mustang-V100-MX4	Computing Accelerator Card with 4 x Intel® Movidius™ Myriad™ X MA2485 VPU, PCIe Gen2 x 2 interface, RoHS
OS: Windows Embedded 10	DRPC-230-ULT5-W10E64-V-R10	OS Image with Windows® Embedded Standard 10 E Value 64-bit 2019 for DRPC-230-ULT5 Series, with DVD-ROM, RoHS

[1] It is required to order Power Cable together with Adapter for power usage
[2] Please select 96W adapter if intend to add accelerator cards
[3] Each Wi-Fi module needs two antennas and two RF cables to fully support Wi-Fi function
[4] Only applicable for DRPC-230-ULT5-i5/8G-R10

Fully Integrated I/O

Front View

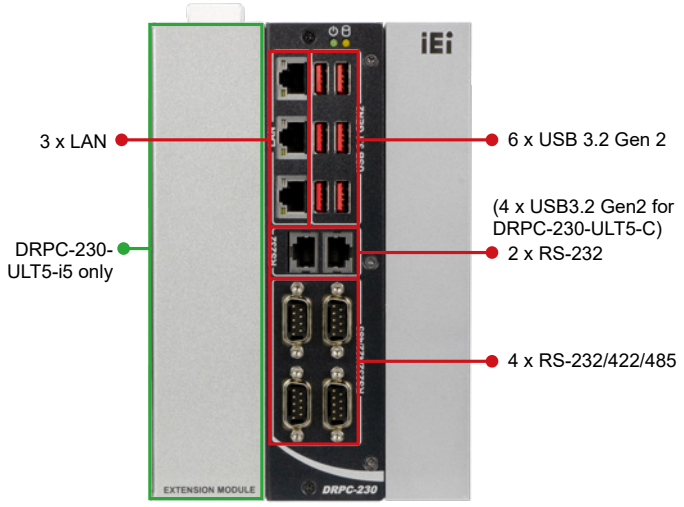

Top View

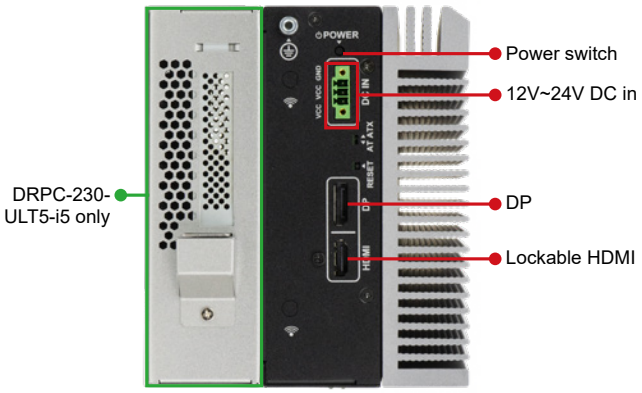

DRPC-230-ULT5-i5/S
DRPC-230-ULT5-C/S
Dimensions (Unit: mm)

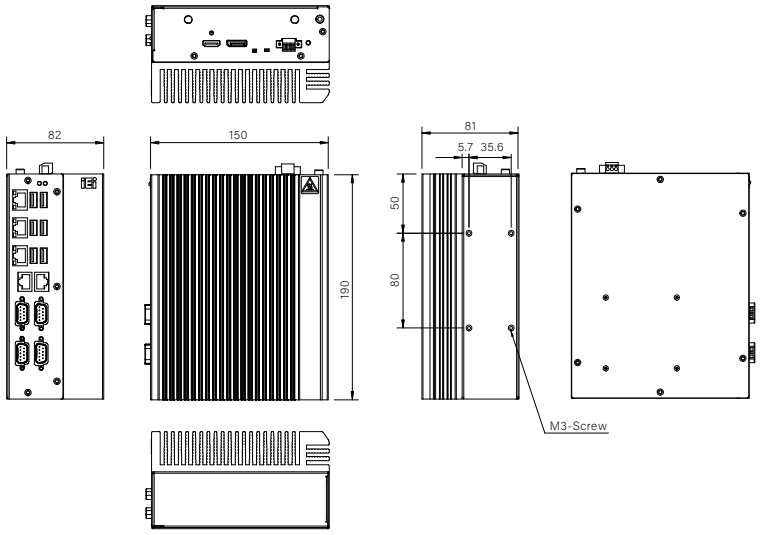

DRPC-230-ULT5-i5
Dimensions (Unit: mm)

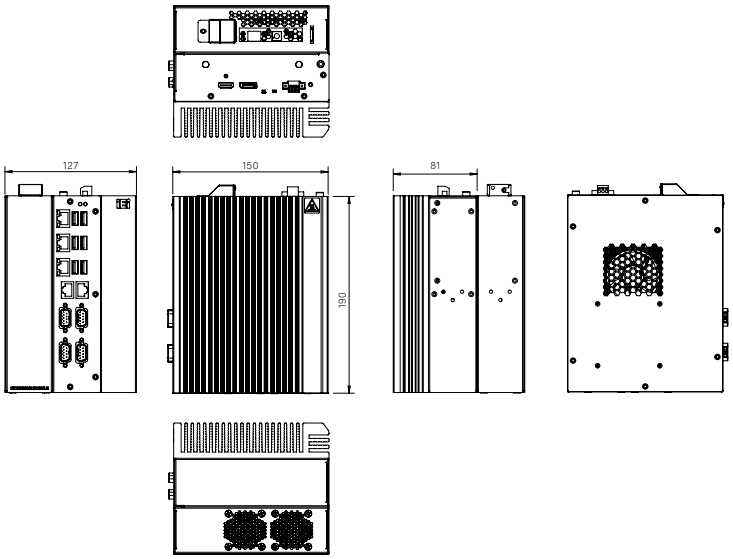

RACK-500AI-C246

NEW



Feature

- Intel® Coffee Lake C246 chipset with Xeon® CPU
- 1 x Front-accessible 3.5” and 1 x 3.5” HDD drive capacity
- Integrated one PCIe x16 and one x4 Gen3 expansion slot
- Great flexibility hardware expansion

Intel 8th/9th Xeon | 4K HDMI | ECC DDR4 | Native PCIe Gen. 3 | Gigabit Ethernet DUAL GBE | SUPERSPEED USB USB 3.2 Gen1

intel

Specifications

Model Name		RACK-500AI-C246
Chassis	Color	Navy blue and black
	Dimensions (WxDxH)	440.2 mm x 110.6 mm x 221.3 mm
	System Fan	System Fan & CPU Fan
	Chassis Construction	Heavy duty metal
Motherboard	CPU	Intel® Xeon® E-2176G CPU (3.70 GHz, Hexa Core, TDP 80W)
	Chipset	Intel® C246
	System Memory	Four 288-pin 2666MHz dual-channel DDR4 SDRAM unbuffered DIMMs support up to 64GB ECC & non-ECC (2 x 8G Pre-installed)
	Display Output	Dual display supported 1 x HDMI (up to 4096 x 2304@30Hz) 1 x Internal DisplayPort (up to 4096 x 2304@60Hz)
Storage	Hard Drive	1x 3.5" 6 Gb/s SATA removable drive Bay (Hot swap)
	M.2	1 x 2280 M key (PCIe x4)
I/O interfaces	Ethernet	LAN1: Intel® I219LM PHY LAN2: Intel® I211-AT PCIe controller (Co-lay I210-AT)
	USB 3.2	2 x Internal USB 3.2 Gen1 (2x10 pin)
	USB 2.0	6 (pin header)
	RS-232	3 (pin header)
	RS-422/485	1 (1x4 pin, P=2.0)
	Expansion	1 x PCIe Gen3 x16 slot 1 x PCIe Gen3 x4 slot **If use 2 slots capacity PCIe add-on Cards (maximum length 338mm) need to change cooler (P/N: 19100-000238-00-RS)
Power	Power Input	ATX Power (350W)
	PCIe Expansion Card (GPU/Add-on Cards) Recommendation	Total maximum up to 150W (80W CPU with 16GB memory, 350W ATX Power) Total maximum up to 180W (35W CPU with 16GB memory, 350W ATX Power)
Reliability	Mounting	Rack mount
	Operating Temperature	-20°C~+50°C
	Storage Temperature	-30°C~+60°C
	Relative Humidity	10% ~ 95%, non-condensing
	Operating Shock	Half-sine wave shock 5G, 11ms, 100 shocks per axis
	Operation Vibration	MIL-STD-810G 514.6C-1
	Weight (Net/Gross)	8 kg/11 kg
	Safety/EMC	CE/FCC
OS	Supported OS	Microsoft® Windows® 10, Linux

Ordering Information

Part No.	Description
RACK-500AI-C246-XE/16G/35-R10	5U AI System with Intel® Xeon® E-2176G CPU (3.70 GHz, Hexa Core, TDP 80W) with Intel® C246, pre-installed 16GB ECC DDR4 memory, HDMI, Dual Intel® PCIe GbE, USB 3.2, iAMT, w/ 1 PCIe x16/x4 Slot BP, w/ FSP350(350W), RoHS
RACK-500AI-C246-35-R10	5U AI System with Intel® C246, HDMI, Dual Intel® PCIe GbE, USB 3.2, iAMT, w/ 1 PCIe x16/x4 Slot BP, w/ FSP350, RoHS

Options

Part No.	Description
GPOE-2P-R20	PCI Express Power over Ethernet card, 2-port 1000 Base(T), 802.3at compliant, low profile, RoHS
GPOE-4P-R20	PCI Express Power over Ethernet card, 4-port 1000 Base(T), 802.3at/af compliant, low profile, RoHS
IPCIE-4POE-R10	PCI Express Power over ethernet card, 4-port 1000 Base(T), 802.3af compliant, RoHS
Mustang-200-i7-1T/32G-R10	Computing Accelerator Card supports Two Intel® Core™ i7-7567U with Intel® 600P 1TB (512GB x2) SSD, 32GB (8GB x4) DDR4, PCIe x4 interface, QTS-Lite, and RoHS
Mustang-200-i5-1T/32G-R10	Computing Accelerator Card supports Two Intel® Core™ i5-7267U with Intel® 600P 1TB (512GB x2) SSD, 32GB (8GB x4) DDR4, PCIe x4 interface, QTS-Lite, and RoHS
Mustang-200-C-8G-R10	Computing Accelerator Card supports Two Intel® Celeron® 3865U with, 8GB (2GB x4) DDR4, PCIe x4 interface, QTS-Lite, and RoHS
Mustang-V100-MX4-R10	Computing Accelerator Card with 4 x Intel® Movidius™ Myriad™ X MA2485 VPU, PCIe Gen2 x2 interface, RoHS
Mustang-V100-MX8-R11	Computing Accelerator Card with 8 x Movidius Myriad X MA2485 VPU, PCIe gen2 x4 interface, RoHS
Mustang-F100-A10-R10	PCIe FPGA Highest Performance Accelerator Card with Arria 10 1150GX support DDR4 2400Hz 8GB, PCIe Gen3 x8 interface
19800-000075-RS	PS/2 KB/MS cable with bracket, 220mm, P=2.0
32102-000100-200-RS	SATA power cable, MOLEX 5264-4P to SATA15P
AC-KIT-892HD-R10	7.1 channel HD Audio kit with Realtek ALC892 support dual audio streams
SAIDE-KIT01-R10	SATA to IDE/CF Converter board
32102-000100-200-RS	WIRE CABLE; POWER CABLE; SERIAL ATA POWER CABLE; 3; 150MM; 18AWG; (A)MOLEX 8981-4M P=5.08; (B)SATA 15P 180° X2; ONE PCS PKG W/ LABEL; RoHS
32102-044900-100-RS	WIRE CABLE; POWER CABLE; PCIE power cable; 3; 100MM; 20AWG; (A)MOLEX 8981-04M P=5.08*2; (B)TKP:H6657R1-06-B-03 P=4.2; Polywell; RoHS
32102-011500-100-RS	WIRE CABLE; POWER CABLE; ; 3; 150MM; 18AWG; MOLEX 8981-04P P=5.08 X2; MOLEX 8981-04M P=5.08; Wins Precision; RoHS
19100-000238-00-RS	COOLER MODULE; HEATSINK:105*67*12.1mm; FAN:77*75*15.4mm; STANDARD; 00; HF-XFWD-00383-1710; DC FAN:12V, 4P, 5500RPM, TOW BALL; ; Everflow; B127515BU; CCL; RoHS
CA-950GB-R10	19” Rackmount Carrier for Rack-500G/RACK-900G/RACK-500AI

Fully Integrated I/O

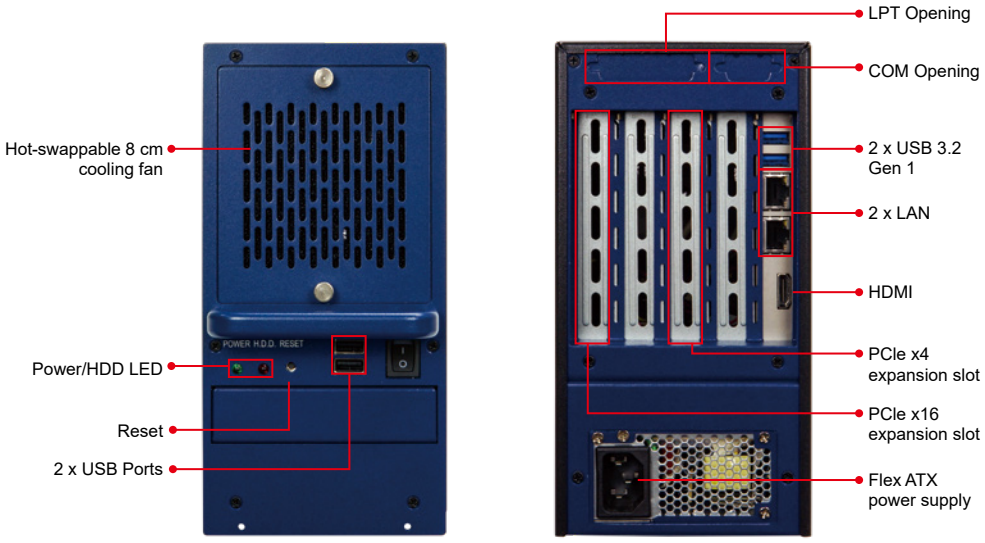

FDD and HDD are not included in package



CA-950GB-R10



CA-950GB-R10

19" rack carrier can carry four RACK-500AI and fit into standard 19" width rack with 5U height.

RACK-500AI-C246 Dimensions (Unit: mm)

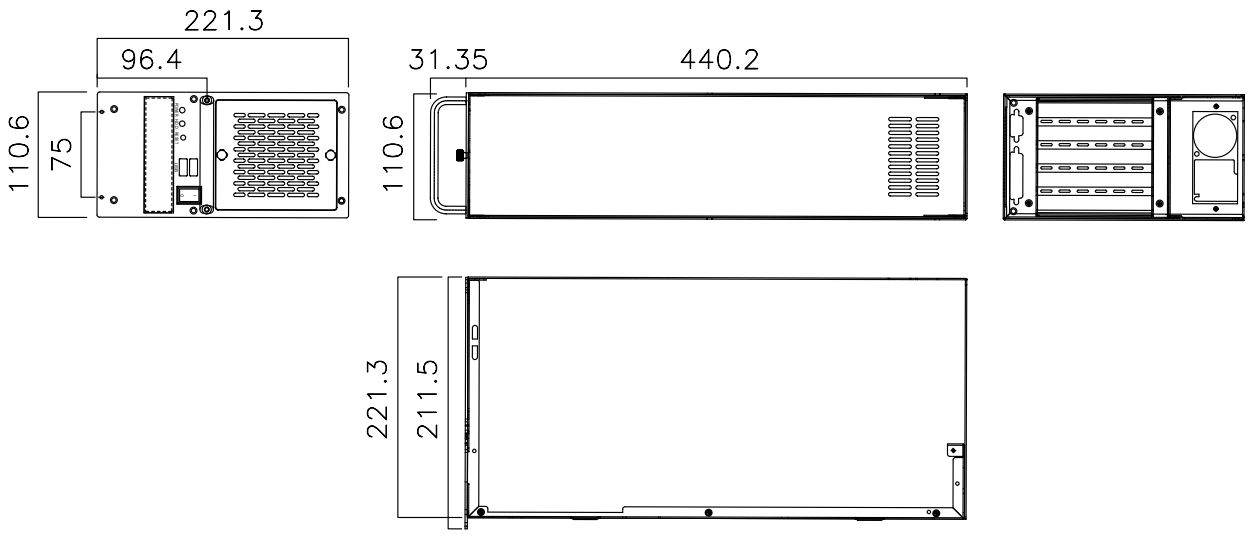

Single board computer in RACK-500AI (SPCIE-C246)

Full-size PICMG 1.3 CPU Card supports LGA1151 Intel® Xeon® E3, Core™ i9/i7/i5/i3/Pentium®/Celeron® CPU per Intel® C246, ECC & non-ECC DDR4, HDMI, DP, Dual Intel® PCIe GbE, USB 3.2, SATA 6Gb/s, M.2, HD Audio, iAMT and RoHS.

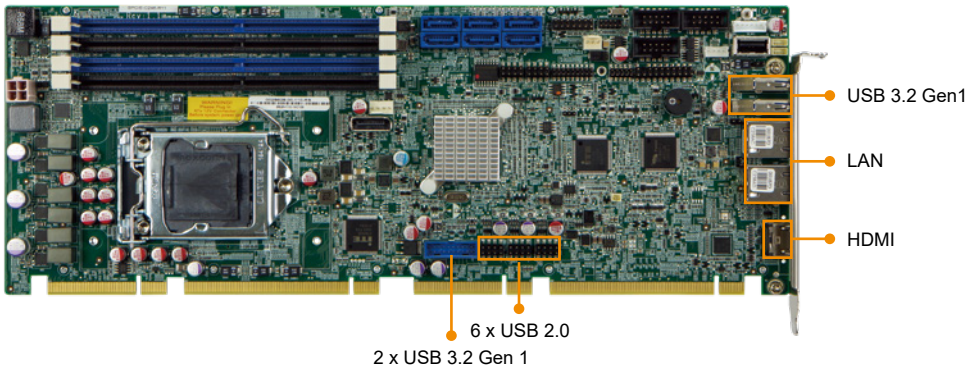

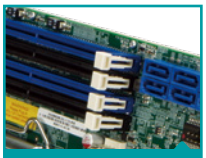
Four 288-pin DDR4 SDRAM Supported



RAID 0, 1, 5, 10 function compatible with six ports of SATA 6Gb/s

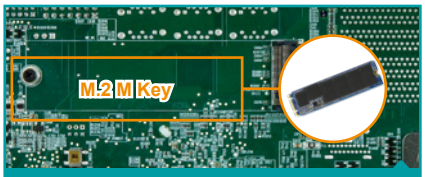

M.2 M key 2280 (PCIe x4)

PCI Express Backplane in RACK-500AI (PE-3S1)

5-slot PICMG 1.3 backplane with one PCIe x16 Slot and one PCIe x4 Slot, RoHS.

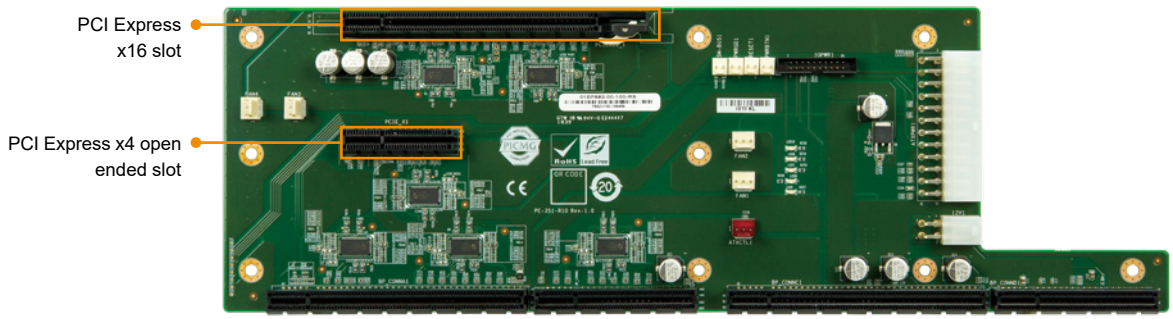

PE-3S1
Dimensions (Unit: mm)

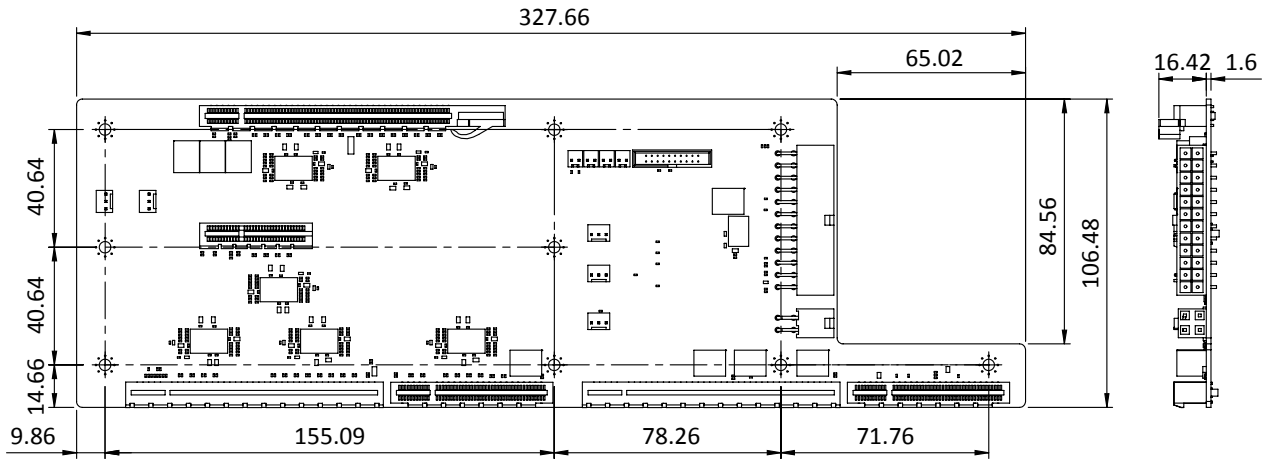

PAC-400AI-C236

NEW



Feature

- Intel® Skylake C236 chipset with Xeon® CPU
- One 8 cm hot swappable fan
- Integrated one PCIe x16 and one x4 Gen3 expansion slot
- Great flexibility hardware expansion

Intel® Xeon | VGA | ECC DDR4 | Native PCIe Gen. 3 | Gigabit Ethernet DUAL GBE | SUPERSPEED USB 3.2 Gen1

intel

Specifications

Model Name		PAC-400AI-C236
Chassis	Color	NAVY BLUE & BLACK
	Dimensions (WxDxH)	268.7mm x 140mm x 230.3mm
	System Fan	System Fan & CPU Fan
	Chassis Construction	Heavy duty metal
Motherboard	CPU	Intel® Xeon® E3-1275 v5 CPU (3.60 GHz, Quad Core, TDP 80W)
	Chipset	Intel® C236
	System Memory	Two 260-pin 1600/2133 MHz dual-channel DDR4 ECC and non-ECC unbuffered SODIMMssupport up to 32 GB (2 x 8GB Pre-installed)
	Display Output	1 x VGA (up to 1920x1200@60 Hz) 1 x iDP interface for HDMI, LVDS, VGA, DVI, DP (up to 3840x2160@60 Hz)
Storage	Hard Drive	1x 3.5” 6 Gb/s SATA removable drive Bay (Hot swap)
	MSATA	1
I/O interfaces	Ethernet	LAN1: Intel® I219LM Clarkville-V with Intel® AMT 11.0 support LAN2: Intel® I211 PCIe controller
	KB/MS	1 x (1x6 pin)
	USB 3.2	2 x USB 3.2 Gen1
	USB 2.0	2 x USB 2.0
	Expansion	1 x PCIe Gen3 x16 slot 1 x PCIe Gen3 x4 slot **PCIe Half Size Cards length support to maximum 169mm
Power	Power Input	ATX Power (350W)
	PCIe Expansion Card (GPU/Add-on Cards) Recommendation	Total maximum up to 150W (80W CPU with 16GB memory, 350W ATX Power) Total maximum up to 180W (35W CPU with 16GB memory, 350W ATX Power)
Reliability	Mounting	Wall mount
	Operating Temperature	0°C~+50°C
	Storage Temperature	0°C~+60°C
	Relative Humidity	10% ~ 95%, non-condensing
	Weight (Net/Gross)	6 kg/7.8 kg
	Safety/EMC	CE/FCC
OS	Supported OS	Microsoft® Windows® 10, Linux

Ordering Information

Part No.	Description
PAC-400AI-C236-XE/16G/35-R10	Half-size AI System with Intel® Xeon® E3-1275 v5 CPU (3.60 GHz, Quad Core, TDP 80W) w/ Intel® C236, pre-installed 16GB ECC DDR4 SO-DIMM memory, VGA, Intel GbE, USB 3.2, PCIe Mini, w/ 1 PCIe x16/x4 Slot BP, w/ FSP350 (350W), RoHS
PAC-400AI-C236-35-R10	Half-size AI System with Intel® C236, VGA, Intel GbE, USB 3.2, PCIe Mini, w/ 1 PCIe x16/x4 Slot BP, w/ FSP350 (350W), RoHS

Options

Part No.	Description
GPOE-2P-R20	PCI Express Power over Ethernet card, 2-port 1000 Base(T), 802.3at compliant, low profile, RoHS
GPOE-4P-R20	PCI Express Power over Ethernet card, 4-port 1000 Base(T), 802.3at/af compliant, low profile, RoHS
IPCIE-4POE-R10	PCI Express Power over ethernet card, 4-port 1000 Base(T), 802.3af compliant, RoHS
Mustang-V100-MX4-R10	Computing Accelerator Card with 4 x Intel® Movidius™ Myriad™ X MA2485 VPU, PCIe Gen2 x2 interface, RoHS
Mustang-V100-MX8-R11	Computing Accelerator Card with 8 x Movidius Myriad X MA2485 VPU, PCIe gen2 x4 interface, RoHS
Mustang-F100-A10-R10	PCIe FPGA Highest Performance Accelerator Card with Arria 10 1150GX support DDR4 2400Hz 8GB, PCIe Gen3 x8 interface
19800-000075-RS	PS/2 KB/MS cable with bracket, 220mm, P=2.0
32102-000100-200-RS	SATA power cable, MOLEX 5264-4P to SATA15P
AC-KIT-892HD-R10	7.1 channel HD Audio kit with Realtek ALC892 support dual audio streams
SAIDE-KIT01-R10	SATA to IDE/CF Converter board
32102-000100-200-RS	WIRE CABLE; POWER CABLE; SERIAL ATA POWER CABLE; 3; 150MM; 18AWG; (A)MOLEX 8981-4M P=5.08; (B)SATA 15P 180° X2; ONE PCS PKG W/ LABEL; RoHS
32102-044900-100-RS	WIRE CABLE; POWER CABLE; PCIE power cable; 3; 100MM; 20AWG; (A)MOLEX 8981-04M P=5.08*2; (B) TKP:H6657R1-06-B-03 P=4.2; Polywell; RoHS
32102-011500-100-RS	WIRE CABLE; POWER CABLE; ; 3; 150MM; 18AWG; MOLEX 8981-04P P=5.08 X2; MOLEX 8981-04M P=5.08; Wins Precision; RoHS
19100-000238-00-RS	COOLER MODULE; HEATSINK:105*67*12.1mm; FAN:77*75*15.4mm; STANDARD; 00; HF-XFWD-00383-1710; DC FAN:12V, 4P, 5500RPM, TOW BALL; Everflow; B127515BU; CCL; RoHS

Fully Integrated I/O

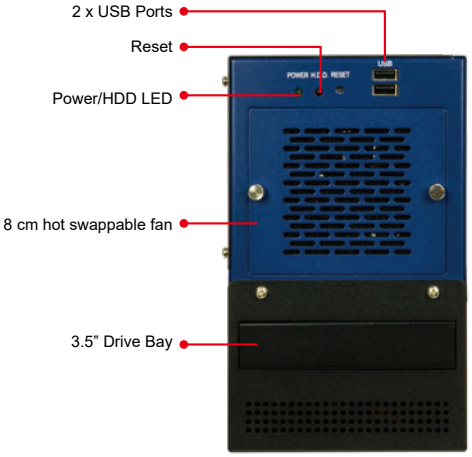

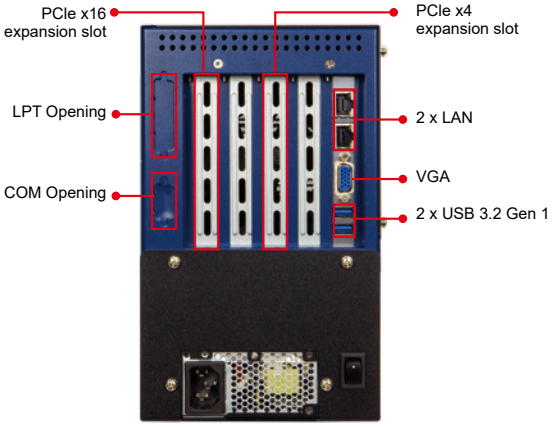

PAC-400AI-C236
Dimensions (Unit: mm)

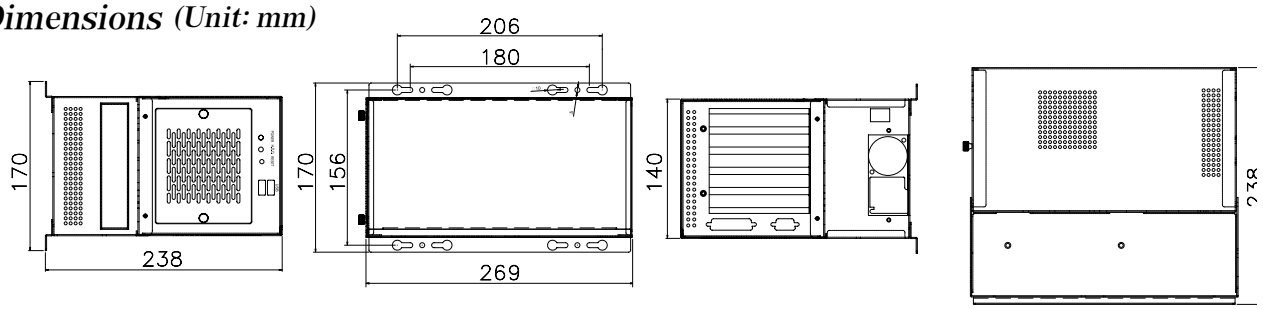

Single board computer in PAC-400AI (HPCIE-C236)

Half-size PICMG 1.3 CPU Card supports LGA 1151 Intel® Xeon® E3, Core™ i3/Pentium®/Celeron® CPU with Intel® C236, ECC & non-ECC DDR4 SO-DIMM, VGA, iDP, Dual Intel® PCIe GbE, USB 3.2 Gen 1 (5Gb/s), SATA 6Gb/s, mSATA, HD Audio, Intel® AMT and RoHS.

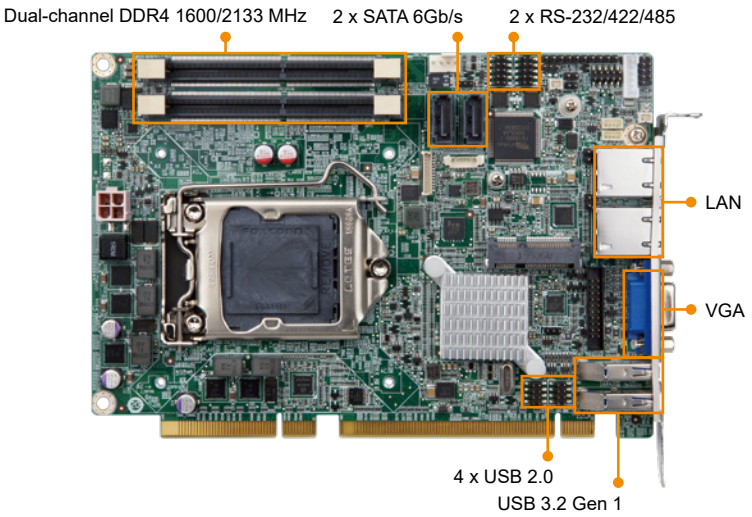

PCIe Mini slot provides mSATA and USB signal for full-size or half-size mSATA SSD and wireless LAN card.

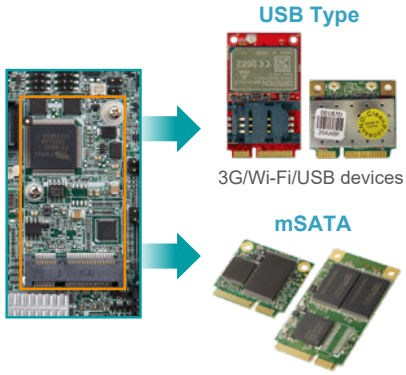

PCI Express Backplane in PAC-400AI (HPE2-3S1)

5-slot PICMG 1.3 backplane for half-size SBC, with one PCIe x16 Slot and one PCIe x4 Slot, RoHS.

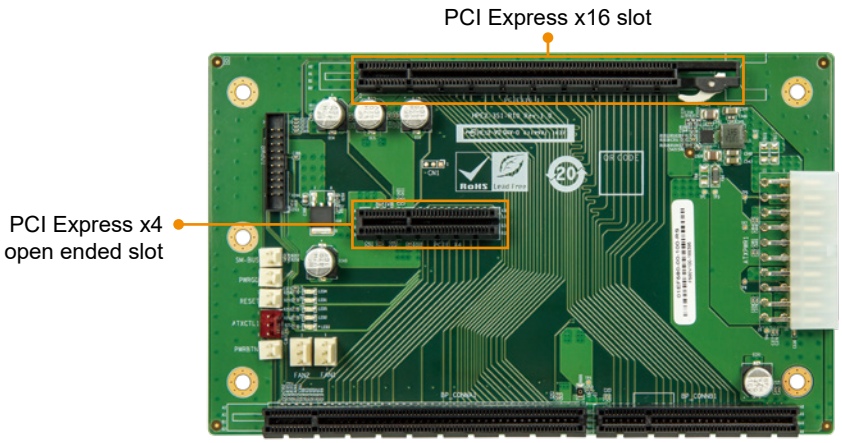

HPE2-3S1
Dimensions (Unit: mm)

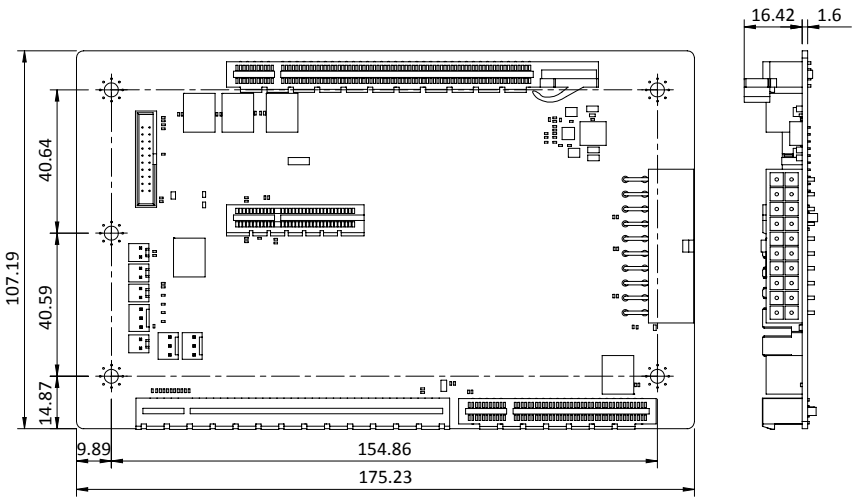

Mustang-F100-A10



Feature

- Half-Height, Half-Length, Double-slot.
- Power-efficiency, low-latency.
- Supported OpenVINO™ toolkit, AI edge computing ready device.
- FPGAs can be optimized for different deep learning tasks.
- Intel® FPGAs supports multiple float-points and inference workloads.

Specifications

Model Name	Mustang-F100-A10
Main FPGA	Intel® Arria® 10 GX1150 FPGA
Operating Systems	Ubuntu 16.04.3 LTS 64-bit, CentOS 7.4 64-bit Ubuntu 18.04.x 16.04.x LTS 64bit, CentOS 7.4 64bit, (Windows® 10 64bit & more OS are coming soon)
Voltage Regulator and Power Supply	Intel® Enpirion® Power Solutions
Memory	8G on board DDR4
Dataplane Interface	PCI Express x8
	Compliant with PCI Express Specification V3.0
Power Consumption	Approximate 40W
Operating Temperature	5°C~60°C
Cooling	Active fan
Dimensions	Standard Half-Height, Half-Length, Double-slot
Operating Humidity	5% ~ 90%
Power Connector	*Preserved PCIe 6-pin 12V external power
Dip Switch/LED indicator	Identify card number
Support Topology	AlexNet; DenseNet-121, -161, -169, -201; GoogLeNet v1, v2, v3, v4; Inception v1, v2, v3, v4; LSTM: CTPN MobileNet v1, v2; MobileNet SSD; MTCNN-o, -p, -r; ResNet-18, -50, -101, -152; ResNet v2-50, -101, -152 Sphereface; SqueezeNet v1.0, v1.1; SSD MobileNet v1, v2; SSD Inception v2, v3; SSD ResNet; SSD300 SSD512; U-Net; VGG16, VGG19; YoloTiny v1, v2, v3; Yolo v2, v3 * For more topologies support information please refer to Intel® OpenVINO™ Toolkit official website. [Supported Models] https://docs.openvinotoolkit.org/latest/_docs_IE_DG_Introduction.html#SupportedFW [Supported Framework Layers] https://docs.openvinotoolkit.org/latest/_docs_MO_DG_prepare_model_Supported_Frameworks_Layers.html

*TANK AIoT dev. kit PCIe slot provides 75W power, this feature is preserved for user in case of different system configuration.
Warning: DO NOT install the Mustang-F100-A10 into the TANK AIoT Dev. Kit before shipment. It is recommended to ship them with their original boxes to prevent the Mustang-F100-A10 from being damaged.

Ordering Information

Part No.	Description
Mustang-F100-A10-R10	PCIe FPGA Highest Performance Accelerator Card with Arria 10 1150GX support DDR4 2400Hz 8GB, PCIe Gen3 x8 interface
7Z000-00FPGA00	7Z0-OTHERS PERIPHERAL DEVICE;FPGA Download Cable; IEI USB DOWNLOAD CABLE;GALAXY;USB Download+USB CABLE+IDE CABLE+FPGA CABLE

*Due to the OpenVINO™ toolkit version is upgraded periodically, IEI strongly recommend users to purchase FPGA programmer kit (7Z000-00FPGA00) to upgrade the latest bitstreams to get best performance.
*If you would like to buy FPGA Download Cable kit(7Z000-00FPGA00), please email to online@ieiworld.com or place an order on IEI USA e-shop, thank you.

Packing List

1 X Full height bracket
1 x External power cable
1 x QIG

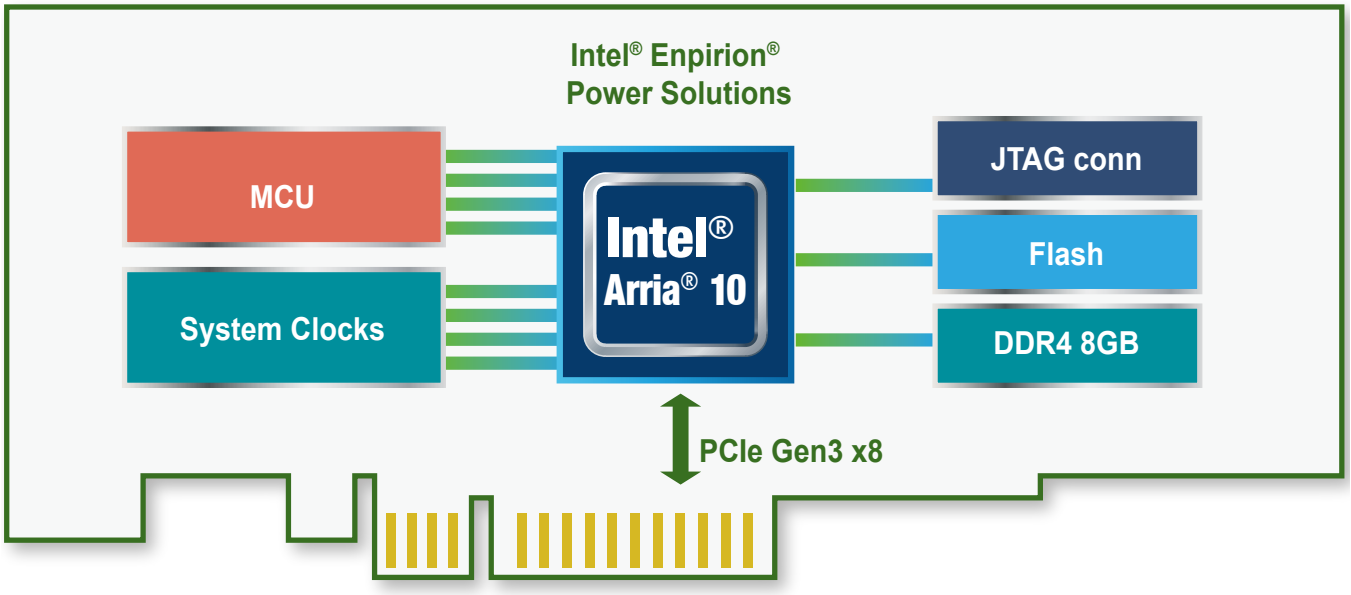

Mustang-F100-A10 Block Diagram

- Intel® Arria® 10 1150 GX FPGAs delivering up to 1.5 TFLOPs
- Interface: PCIe Gen3 x 8
- Form Factor: Standard Half-Height, Half-Length, Double-slot
- Cooling: Active fan.
- Operation Temperature : 5°C~60°C
- Operation Humidity : 5% to 90% relative humidity
- Power Consumption: Approximate 40W
- Power Connector: *Preserved PCIe 6-pin 12V external power
- DIP Switch/LED Indicator: Identify card number.
- Voltage Regulator and Power Supply: Intel® Enpirion® Power Solutions

Mustang-F100-A10 Dimensions (Unit: mm)

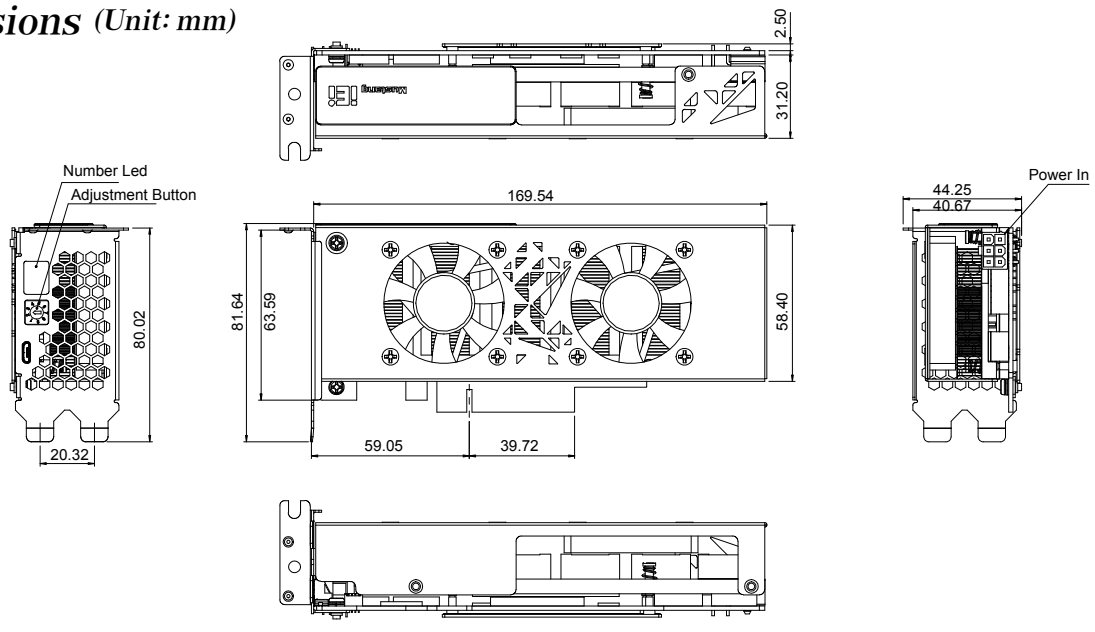

Mustang-V100-MX8



Feature

- Half-Height, Half-Length, Single-slot compact size
- Low power consumption ,approximate 25W
- Supported OpenVINO™ toolkit, AI edge computing ready device
- Eight Intel® Movidius™ Myriad™ X VPU can execute multiple topologies simultaneously.

Specifications

Model Name	Mustang-V100-MX8
Main Chip	Eight Intel® Movidius™ Myriad™ X MA2485 VPU
Operating Systems	Ubuntu 18.04.x 16.04.x LTS 64bit, CentOS 7.4 64bit, Windows® 10 64bit
Dataplane Interface	PCI Express x4
	Compliant with PCI Express Specification V2.0
Power Consumption	Approximate 25W
Operating Temperature	-20°C~60°C
Cooling	Active fan
Dimensions Standard	Half-Height, Half-Length, Single-slot PCIe
Operating Humidity	5% ~ 90%
Power Connector	*Preserved PCIe 6-pin 12V external power
Dip Switch/LED indicator	Identify card number
Support Topology	AlexNet, GoogleNetV1/V2, MobileNet SSD, MobileNetV1/V2, MTCNN, Squeezenet1.0/1.1, Tiny Yolo V1 & V2, Yolo V2, ResNet-18/50/101 * For more topologies support information please refer to Intel® OpenVINO™ Toolkit official website. [Supported Models] https://docs.openvinotoolkit.org/latest/_docs_IE_DG_Introduction.html#SupportedFW [Supported Framework Layers] https://docs.openvinotoolkit.org/latest/_docs_MO_DG_prepare_model_Supported_Frameworks_Layers.html

*TANK AIoT dev. kit PCIe slot provides 75W power, this feature is preserved for user in case of different system configuration.
Warning: DO NOT install the Mustang-V100-MX8 into the TANK AIoT Dev. Kit before shipment. It is recommended to ship them with their original boxes to prevent the Mustang-V100-MX8 from being damaged.

Ordering Information

Part No.	Description
Mustang-V100-MX8-R11	Computing Accelerator Card with 8 x Movidius Myriad X MA2485 VPU, PCIe Gen2 x4 interface, RoHS

Packing List

1 X Full height bracket
1 x External power cable
1 x QIG

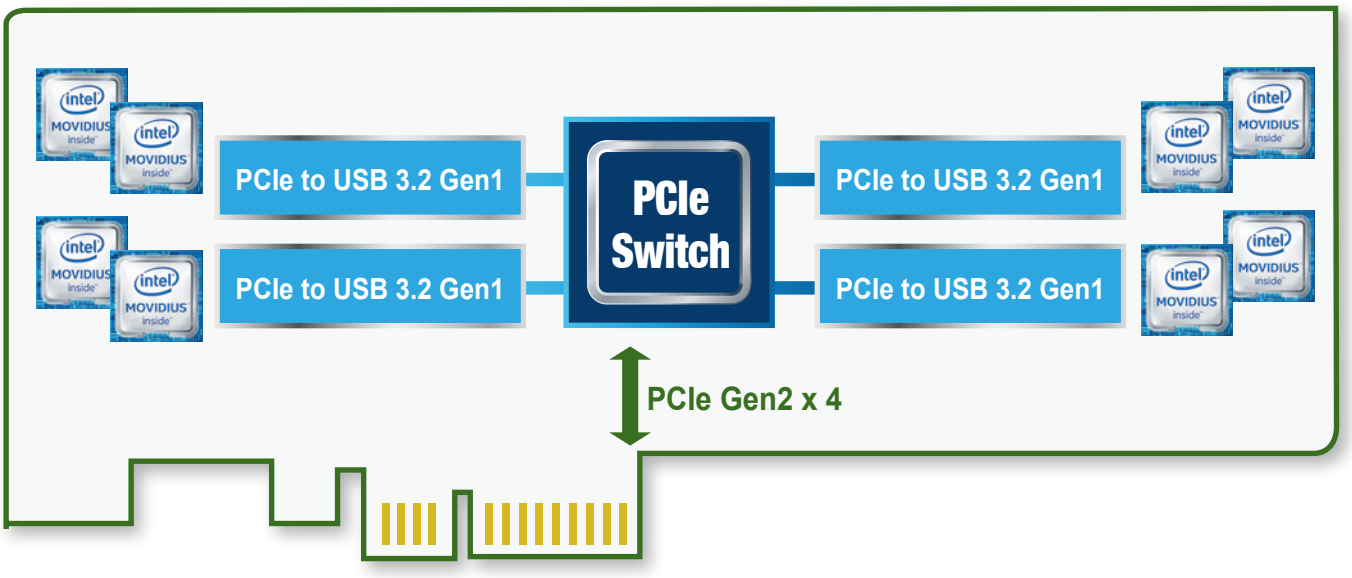

Mustang-V100-MX8 Block Diagram

- 8 Intel® Movidius™ Myriad™ X VPU delivering up to 8 TOPs of dedicated networks compute
- Interface: PCIe Gen2 x 4
- Form Factor: Standard Half-Height, Half-Length, Single-slot
- Cooling: Active fan.
- Operation Temperature: -20°C~60°C
- Operation Humidity : 5% to 90% relative humidity
- Power Consumption: Approximate 25W
- Power Connector: *Preserved PCIe 6-pin 12V external power
- DIP Switch/LED Indicator: Identify card number.

Mustang-V100-MX8 Dimensions (Unit: mm)

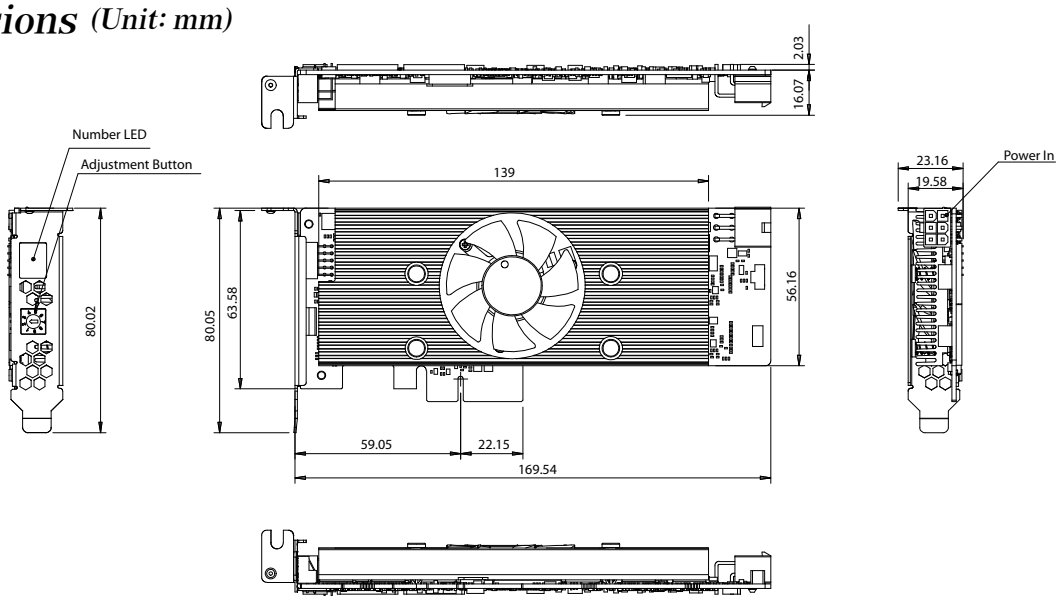

Mustang-V100-MX4



Feature

- PCIe Gen 2 x 2 form factor
- 4 x Intel® Movidius™ Myriad™ X VPU MA2485
- Power efficiency, Approximate 15W.
- Operating Temperature -20°C~60°C
- Powered by Intel's OpenVINO™ toolkit
- Multiple cards supported

Introduction

The Mustang-V100-MX4 is a PCIe Gen 2 x 2 card included 4 Intel® Movidius™ Myriad™ X VPU, providing an flexible AI inference solution for compact size and embedded systems.

VPU is short for vision processing unit. It can run AI faster, and is well suited for low power consumption applications such as surveillance, retail, transportation. With the advantage of power efficiency and high performance to dedicate DNN topologies, it is perfect to be implemented in AI edge computing device to reduce total power usage, providing longer duty time for the rechargeable edge computing equipment.

Specifications

Model Name	Mustang-V100-MX4
Main Chip	4 x Intel® Movidius™ Myriad™ X MA2485 VPU
Operating Systems	Ubuntu 18.04.x 16.04.x LTS 64bit, CentOS 7.4 64bit, Windows® 10 64bit
Dataplane Interface	PCIe Gen 2 x 2
Power Consumption	Approximate 15W
Operating Temperature	-20°C~60°C
Cooling	Active fan
Dimensions	113 x 56 x 23 mm
Operating Humidity	5% ~ 90%
Dip Switch/LED indicator	Identify card number
Support Topology	AlexNet, GoogleNetV1/V2, MobileNet SSD, MobileNetV1/V2, MTCNN, Squeezenet1.0/1.1, Tiny Yolo V1 & V2, Yolo V2, ResNet-18/50/101 * For more topologies support information please refer to Intel® OpenVINO™ Toolkit official website. [Supported Models] https://docs.openvinotoolkit.org/latest/_docs_IE_DG_Introduction.html#SupportedFW [Supported Framework Layers] https://docs.openvinotoolkit.org/latest/_docs_MO_DG_prepare_model_Supported_Frameworks_Layers.html

Ordering Information

Part No.	Description
Mustang-V100-MX4-R10	Computing Accelerator Card with 4x Intel® Movidius™ Myriad™ X MA2485 VPU, PCIe Gen 2 x 2 interface, RoHS

Packing List

1 x Full height bracket

Key Features of Intel® Movidius™ Myriad™ X VPU:

- Native FP16 support
- Rapidly port and deploy neural networks in Caffe and Tensorflow formats
- End-to-End acceleration for many common deep neural networks
- Industry-leading Inferences/S/Watt performance

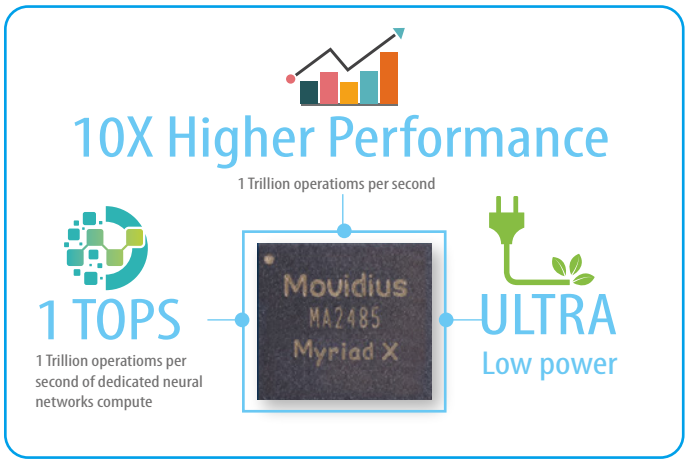

Mustang-V100-MX4 Block Diagram

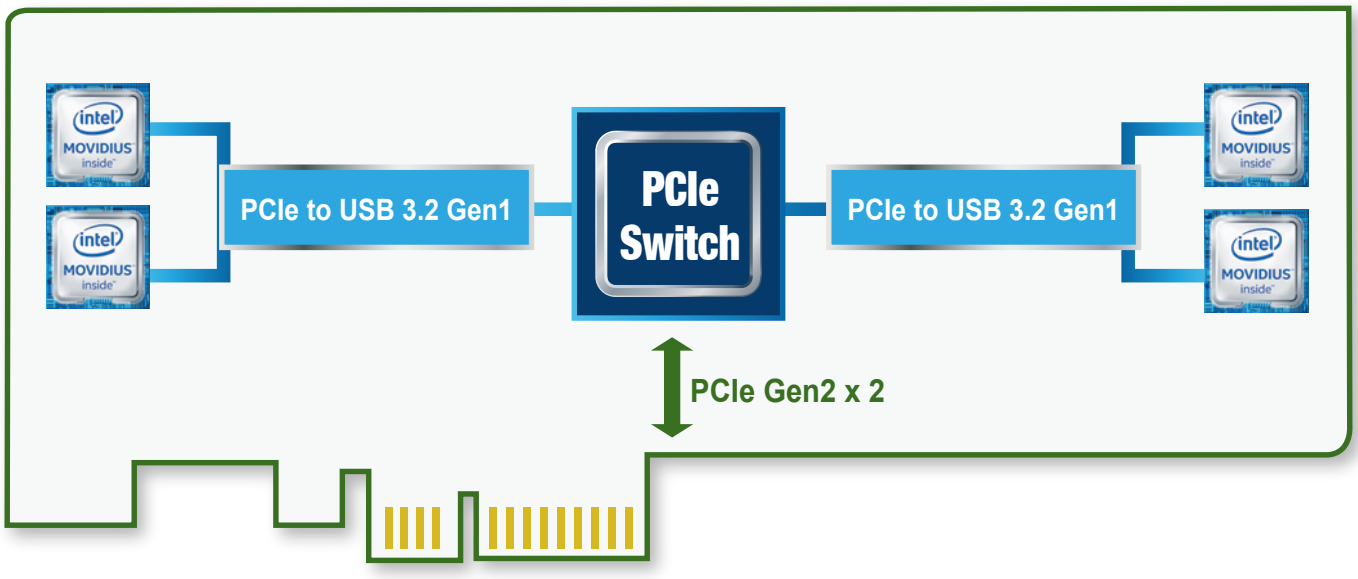

Mustang-V100-MX4 Dimensions (Unit: mm)

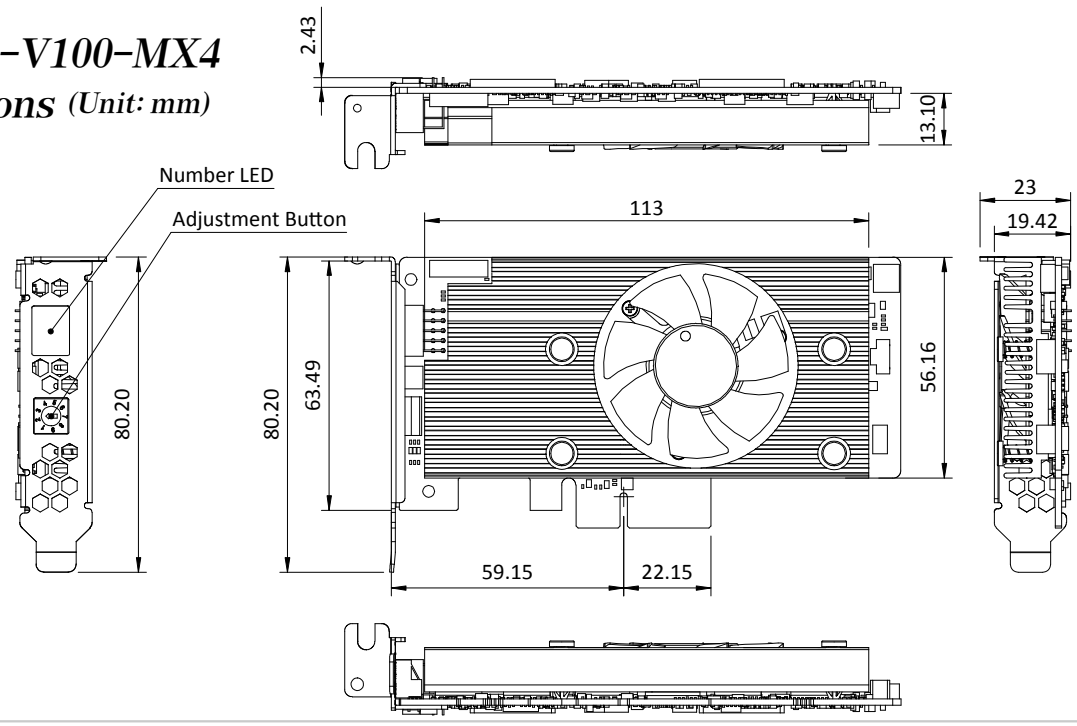

Mustang-M2BM-MX2



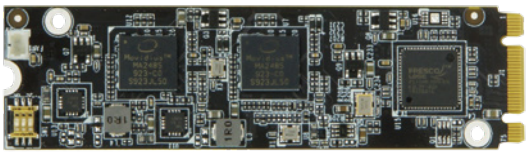



Feature

- M.2 BM key form factor (22 x 80 mm)
- 2 x Intel® Movidius™ Myriad™ X VPU MA2485
- Power efficiency, approximate 7W
- Operating Temperature -20°C~60°C
- Powered by Intel's OpenVINO™ toolkit

Introduction

The Mustang-M2BM-MX2 card included two Intel® Movidius™ Myriad™ X VPU, providing an flexible AI inference solution for compact size and embedded systems.

VPU is short for vision processing unit. It can run AI faster, and is well suited for low power consumption applications such as surveillance, retail, transportation. With the advantage of power efficiency and high performance to dedicate DNN topologies, it is perfect to be implemented in AI edge computing device to reduce total power usage, providing longer duty time for the rechargeable edge computing equipment.

Key Features of Intel® Movidius™ Myriad™ X VPU:

- Native FP16 support
- Rapidly port and deploy neural networks in Caffe and Tensorflow formats
- End-to-End acceleration for many common deep neural networks
- Industry-leading Inferences/S/Watt performance

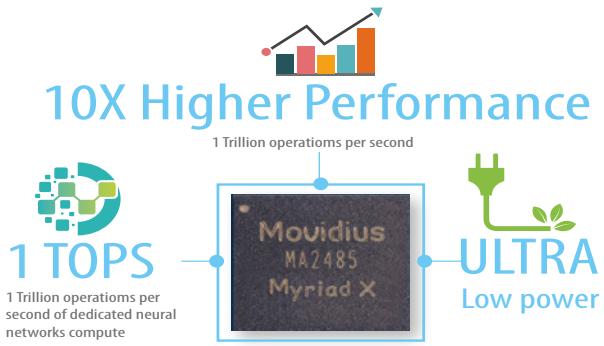

Specifications

Model Name	Mustang-M2BM-MX2
Main Chip	2x Intel® Movidius™ Myriad™ X MA2485 VPU
Operating Systems	Ubuntu 18.04.x 16.04.x LTS 64bit, CentOS 7.4 64bit, Windows® 10 64bit
Dataplane Interface	M.2 BM Key
Power Consumption	Approximate 7W
Operating Temperature	-20°C ~ 60°C (Tested in IEI FLEX-BX200)
Cooling	Active Heatsink
Dimensions	22 x 80 mm
Operating Humidity	5% ~ 90%
Support Topology	AlexNet, GoogleNetV1/V2, MobileNet SSD, MobileNetV1/V2, MTCNN, Squeezenet1.0/1.1, Tiny Yolo V1 & V2, Yolo V2, ResNet-18/50/101 * For more topologies support information please refer to Intel® OpenVINO™ Toolkit official website. [Supported Models] https://docs.openvinotoolkit.org/latest/_docs_IE_DG_Introduction.html#SupportedFW [Supported Framework Layers] https://docs.openvinotoolkit.org/latest/_docs_MO_DG_prepare_model_Supported_Frameworks_Layers.html

Dimensions (Unit: mm)

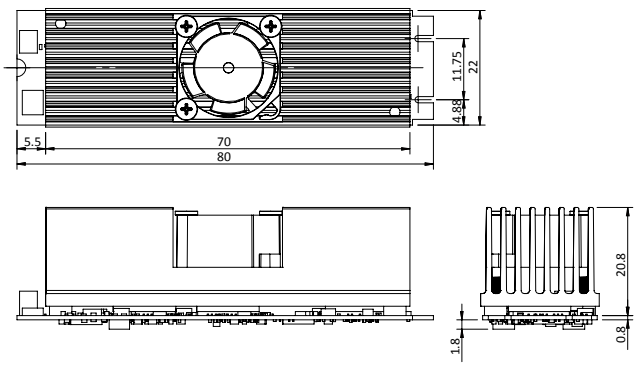

Ordering Information

Part No.	Description
Mustang-M2BM-MX2-R10	Deep learning inference accelerating M.2 BM key card with 2 x Intel® Movidius™ Myriad™ X MA2485 VPU, M.2 interface 22mm x 80mm, RoHS

Mustang-M2AE-MX1

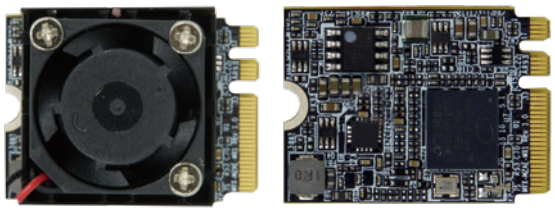



Feature

- M.2 AE key form factor (22 x 30 mm)
- 1 x Intel® Movidius™ Myriad™ X VPU MA2485
- Power efficiency, approximate 4.5W
- Operating Temperature -20°C to 60°C
- Powered by Intel's OpenVINO™ toolkit

Introduction

The Mustang-M2AE-MX1M.2 AE-key card included one Intel® Movidius™ Myriad™ X VPU, providing an flexible AI inference solution for compact size and embedded systems.

VPU is short for vision processing unit. It can run AI faster, and is well suited for low power consumption applications such as surveillance, retail, transportation. With the advantage of power efficiency and high performance to dedicate DNN topologies, it is perfect to be implemented in AI edge computing device to reduce total power usage, providing longer duty time for the rechargeable edge computing equipment.

Key Features of Intel® Movidius™ Myriad™ X VPU:

- Native FP16 support
- Rapidly port and deploy neural networks in Caffe and Tensorflow formats
- End-to-End acceleration for many common deep neural networks
- Industry-leading Inferences/S/Watt performance

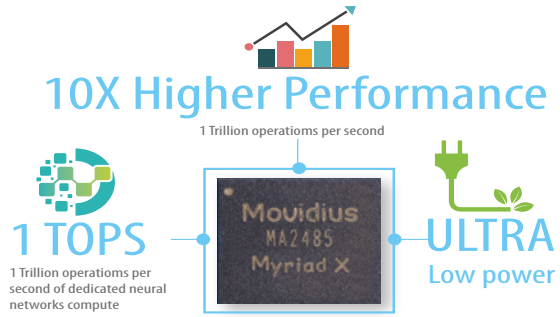

Specifications

Model Name	Mustang-M2AE-MX1
Main Chip	1 x Intel® Movidius™ Myriad™ X MA2485 VPU
Operating Systems	Ubuntu 18.04.x 16.04.x LTS 64bit, CentOS 7.4 64bit, Windows® 10 64bit
Dataplane Interface	M.2 AE Key
Power Consumption	Approximate 4.5W
Operating Temperature	-20°C to 60°C
Cooling	Active Heatsink
Dimensions	22 x 30 mm
Operating Humidity	5% ~ 90%
Support Topology	AlexNet, GoogleNetV1/V2, MobileNet SSD, MobileNetV1/V2, MTCNN, Squeezenet1.0/1.1, Tiny Yolo V1 & V2, Yolo V2, ResNet-18/50/101 * For more topologies support information please refer to Intel® OpenVINO™ Toolkit official website. [Supported Models] https://docs.openvinotoolkit.org/latest/_docs_IE_DG_Introduction.html#SupportedFW [Supported Framework Layers] https://docs.openvinotoolkit.org/latest/_docs_MO_DG_prepare_model_Supported_Frameworks_Layers.html

Dimensions (Unit: mm)

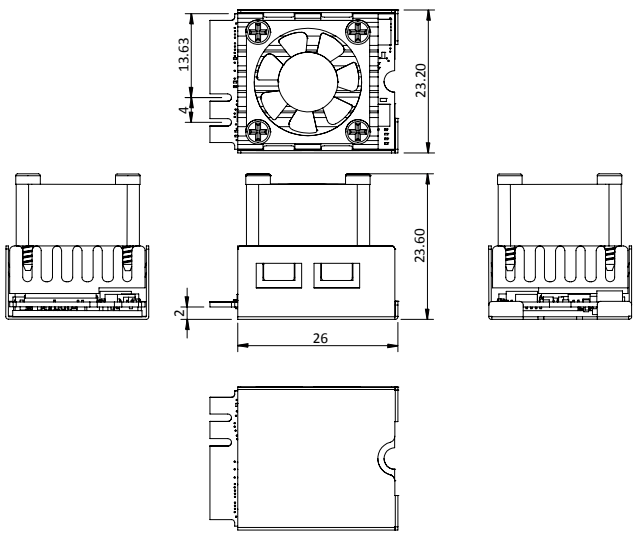

Ordering Information

Part No.	Description
Mustang-M2AE-MX1-R10	Computing Accelerator Card with 1 x Intel® Movidius™ Myriad™ X MA2485 VPU,M.2 AE key interface, 2230, RoHS

Mustang-MPCIE-MX2

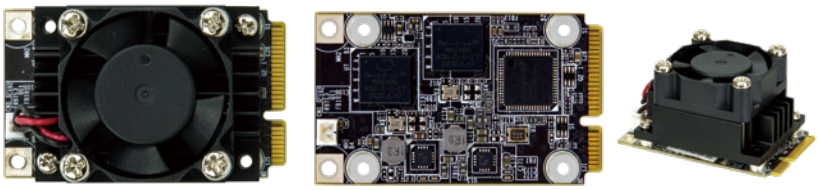

Feature

- miniPCIe form factor (30 x 50 mm)
- 2 x Intel® Movidius™ Myriad™ X VPU MA2485
- Power efficiency, approximate 7.5W
- Operating Temperature -20°C~60°C
- Powered by Intel's OpenVINO™ toolkit

Introduction

The Mustang-MPCIE-MX2 card included two Intel® Movidius™ Myriad™ X VPU, providing an flexible AI inference solution for compact size and embedded systems.

VPU is short for vision processing unit. It can run AI faster, and is well suited for low power consumption applications such as surveillance, retail, transportation. With the advantage of power efficiency and high performance to dedicate DNN topologies, it is perfect to be implemented in AI edge computing device to reduce total power usage, providing longer duty time for the rechargeable edge computing equipment.

Key Features of Intel® Movidius™ Myriad™ X VPU:

- Native FP16 support
- Rapidly port and deploy neural networks in Caffe and Tensorflow formats
- End-to-End acceleration for many common deep neural networks
- Industry-leading Inferences/S/Watt performance

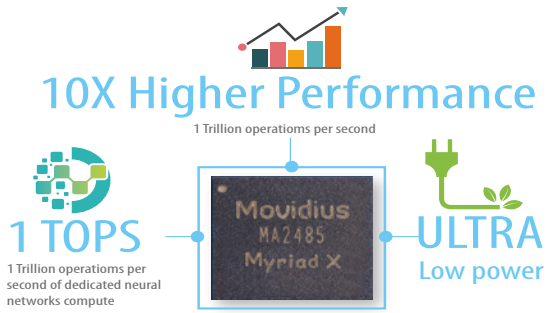

Specifications

Model Name	Mustang-MPCIE-MX2
Main Chip	2 x Intel® Movidius™ Myriad™ X MA2485 VPU
Operating Systems	Ubuntu 16.04.3 LTS 64bit, CentOS 7.4 64bit, Windows® 10 64bit
Dataplane Interface	miniPCIe
Power Consumption	Approximate 7.5W
Operating Temperature	-20°C~60°C
Cooling	Active Heatsink
Dimensions	30 x 50 mm
Operating Humidity	5% ~ 90%
Support Topology	AlexNet, GoogleNetV1/V2, MobileNet SSD, MobileNetV1/V2, MTCNN, Squeezenet1.0/1.1, Tiny Yolo V1 & V2, Yolo V2, ResNet-18/50/101 * For more topologies support information please refer to Intel® OpenVINO™ Toolkit official website.

Dimensions (Unit: mm)

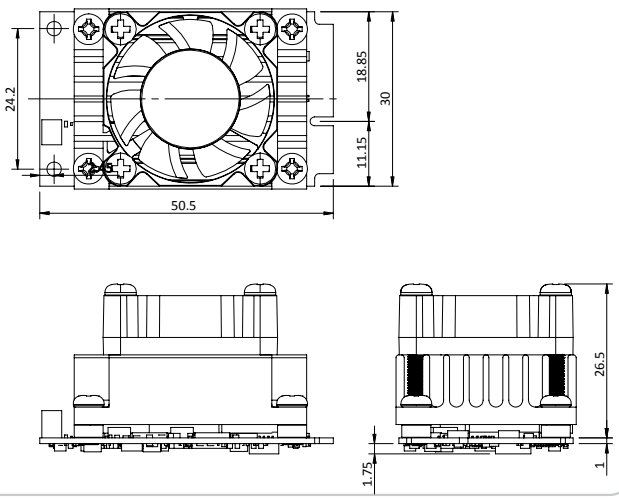

Ordering Information

Part No.	Description
Mustang-MPCIE-MX2-R10	Deep learning inference accelerating miniPCIe card with 2 x Intel® Movidius™ Myriad™ X MA2485 VPU, miniPCIe interface 30mm x 50mm, RoHS

Mustang-V200-KB3

Preliminary

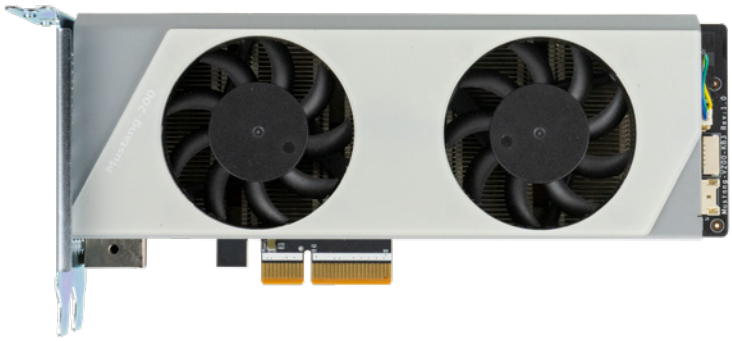

Feature

- 3 x Gen 3 Intel® Movidius™ VPU: Keembay
- Standard Low-profile form factor
- Supported OpenVINO™ toolkit, AI edge computing ready device
- Power consumption approximate 50W

Specifications

Model Name	Mustang-V200-KB3
Main Chip	3 x Intel® Movidius™ Keem Bay™
Embedded CPU	3 x 4 cores ARM A53 1.5GHz
Memory	6 x 2GB LPDDR4
Storage	3 x 16GB eMMC
TPM data protection	Yes
Dimension	Standard Half-Height, Half-length, Double slot
Interface	PCIe Gen3 x 4
Operating Temperature	-20°C ~ 60°C
Power Consumption	Estimated 55W
Cooling	Active (single slot with Fan) / Passive (single slot)
External Power	Preserved power connector
Computation Capability	Up to 15 TOPS (5.1TOPS per 3400 VE)
	Up to 21 TOPS (7.1TOPS per 3700 VE)

Ordering Information

Part No.	Description
Mustang-V200-KB3-R10	Deep learning inference acceleration card with 3 MA2095 Intel® Keem Bay Vision Processing Unit , PCIe Gen 3.0 x 4 interface , RoHS

Packing List

1 x Full height bracket
1 x External power cable
1 x QIG

Introducing Gen 3 Intel® Movidius™ VPU:A Compute-efficient SoC for Edge AI

- High Performance CV & Deep Learning Inference - up to 7.1 TOPS
- You Can Build Stand-alone, Single-chip System - Embedded 4 cores ARM A53 CPU
- Power Efficiency with Low Cost - 15W
- Simultaneous Video Decode/Analytics/Encodeon One Chip - Hardware Codec optimized

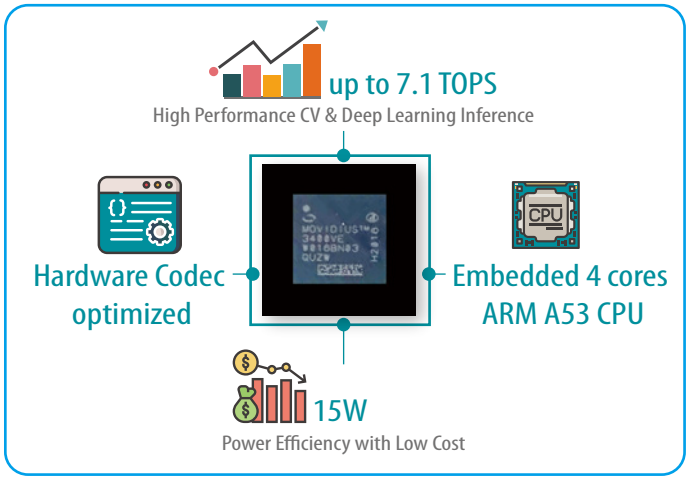

Mustang-V200-KB3 Block Diagram

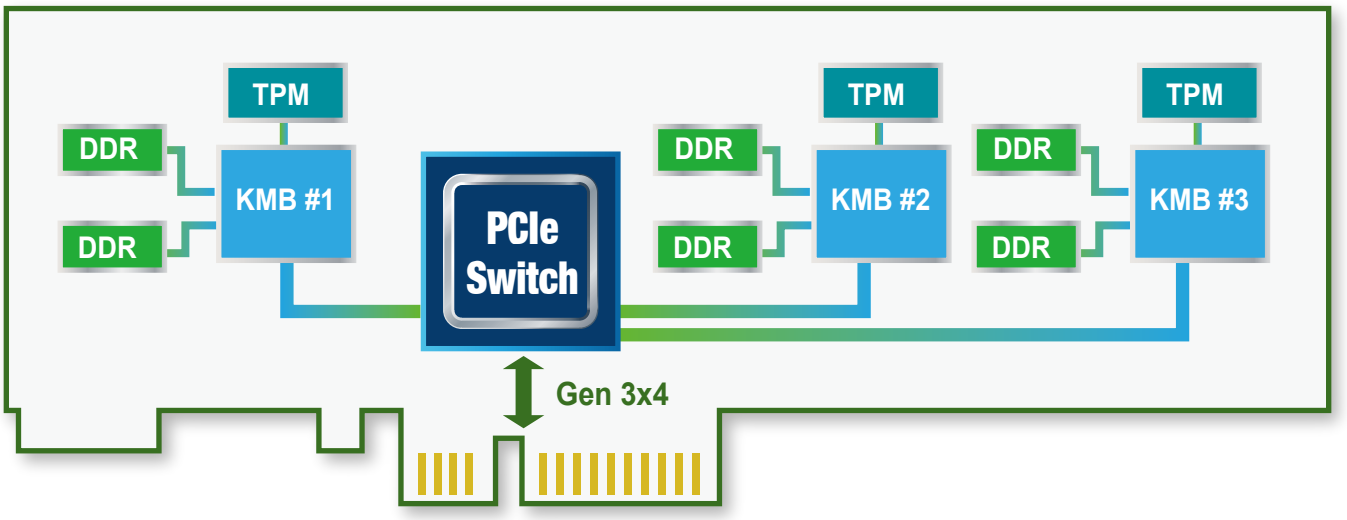

Mustang-V200-KB3 Dimensions (Unit: mm)

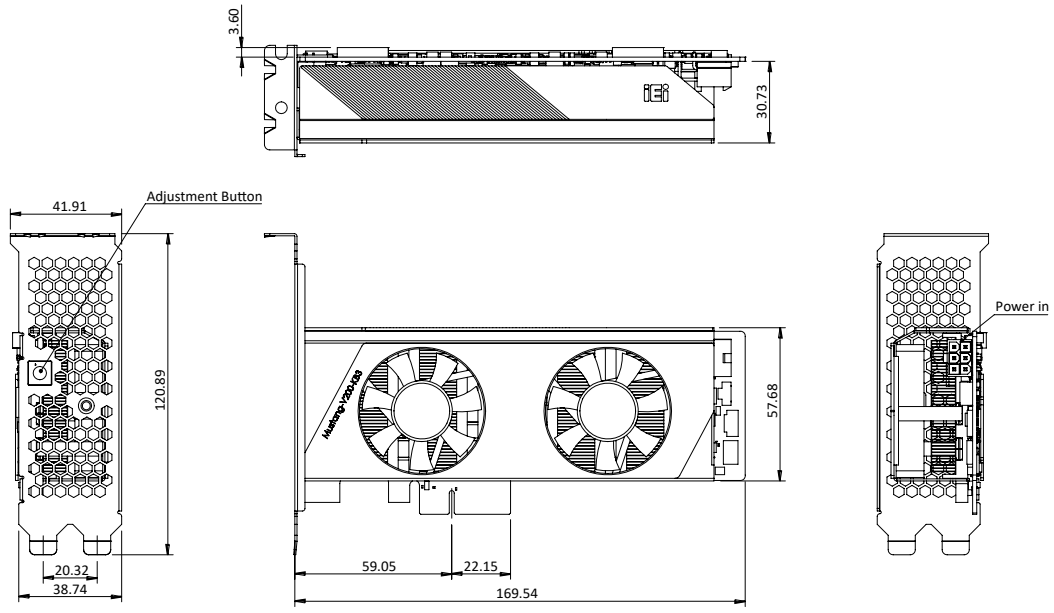

Mustang-M2BM-KB1

Preliminary

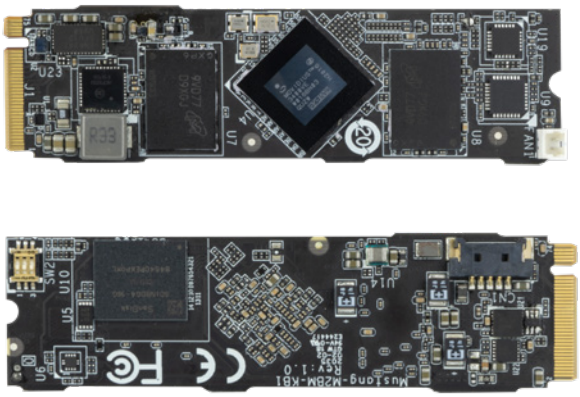

Feature

- 1 x Gen 3 Intel® Movidius™ VPU: Keembay
- Standard M.2 Mkey form factor
- Supported OpenVINO™ toolkit, AI edge computing ready device
- Power consumption approximate 15W

Specifications

Model Name	Mustang-M2BM-KB1
Main Chip	1 x Intel® Movidius™ Keem Bay™
Embedded CPU	4 cores ARM A53 1.5GHz
Memory	2 x 2GB LPDDR4
Storage	16GB eMMC
TPM data protection	Yes
Dimension	Standard Half-Height, Half-length, Double slot
Interface	PCIe Gen3 x 2
Operating Temperature	-20 ~ 60 degree C
Power Consumption	Estimated 15W
Cooling	Active(single slot with Fan) / Passive(single slot)
External Power	Preserved power connector
Computation Capability	Up to 5 .1TOPS per 3400 VE
	Up to 7 .1TOPS per 3700 VE

Ordering Information

Part No.	Description
Mustang-M2BM-KB1-R10	Deep learning inference acceleration card with 1 x MA2095 Intel® Keem Bay Vision Processing Unit , M.2 Mkey PCIe Gen3 x2 interface , RoHS

Packing List

1 x Full height bracket
1 x QIG

Introducing Gen 3 Intel® Movidius™ VPU:A Compute-efficient SoC for Edge AI

- High Performance CV & Deep Learning Inference - up to 7.1 TOPS
- You Can Build Stand-alone, Single-chip System - Embedded 4 cores ARM A53 CPU
- Power Efficiency with Low Cost - 15W
- Simultaneous Video Decode/Analytics/Encodeon One Chip - Hardware Codec optimized

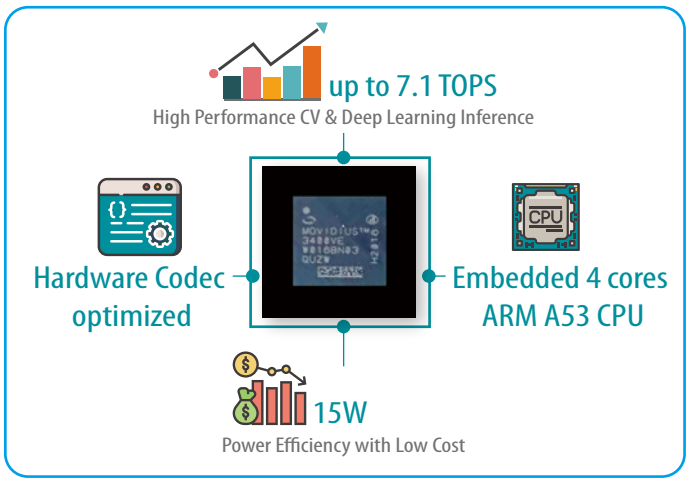

Mustang-M2BM-KB1 Block Diagram

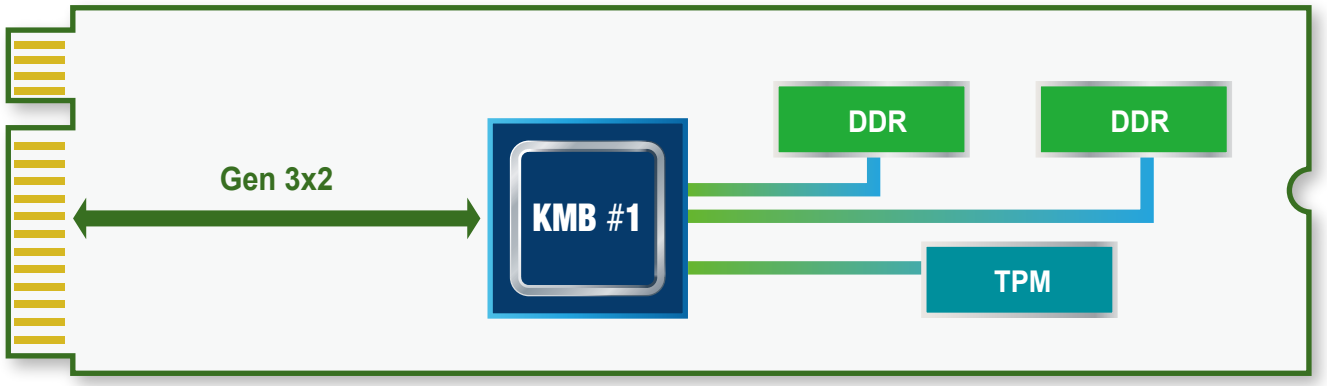

Mustang-M2BM-KB1 Dimensions (Unit: mm)

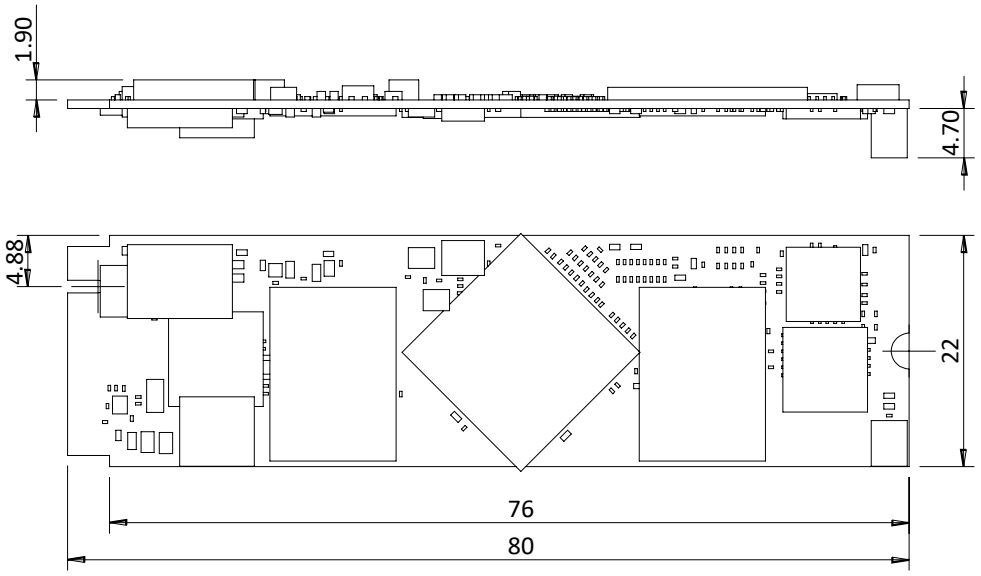

Mustang-T100-T5

Preliminary



Feature

- 5 x Google Edge TPU ML accelerator
- 20 TOPS peak performance (int8)
- Host interface PCIe Gen2 x 4
- Low-profile PCIe form factor
- Approximate 15W
- RoHS compliants

With Coral intelligence
Google

Specifications

Model Name	Mustang-T100-T5
Main Chip	Five Google Coral Edge TPU Accelerator Module
Operating Systems	Linux: 64-bit version of Debian 10 or Ubuntu 16.04 (or newer), and an x86-64 or ARMv8 system architecture
	Windows: 64-bit version of Windows 10, and x86-64 system architecture
Dataplane Interface	PCI Express Gen2x4
Power Consumption	Approximate 15W
Operating Temperature	-20°C~60°C
Cooling Solution	Active/Passive
Dimensions	Standard half-height, half-length, single-slot PCIe card
Dip Switch/LED indicator	Identify card number
Support Framwork	Tensorflow Lite
Precision	INT8
INT8 Perforamnce	Up to 20 TOPS, each TPU module up to 4 TOPS.
	Five TPU modules can provide 20 TOPS.
	Please refer to Google Coral official website for more information.
	https://coral.ai/docs/module/datasheet/
Supported Topology	Image classification, Object detection, Image segmentation
	Please refer to Google Coral official website for more information.
	https://coral.ai/models/

Ordering Information

Part No.	Description
Mustang-T100-T5	Computing Accelerator Card with 5 x Google Coral edge TPU, PCIe Gen2 x4 interface, RoHS

Packing List

1 x Full height bracket
1 x QIG

Accelerator Module datasheet

- Google Edge TPU ML accelerator: 4 TOPS peak performance (int8) / 2 TOPS per watt
- Integrated power management
- PCIe Gen2 x1 or USB 2.0 interface
- Surface-mounted (LGA) module
- Size: 15.0 x 10.0 x 1.5 mm
- **Support ARM (Linux) & X86(Windows & Linux)**
- Weight: 0.67 g
- Operating temp: -40~85 °C
- RoHS compliant

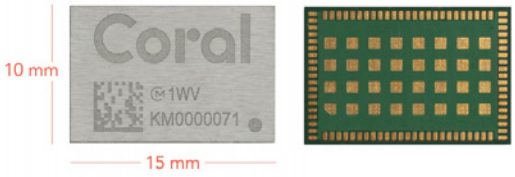

Introduction

Coral is a hardware and software platform for building intelligent devices with fast neural network inferencing.
At the heart of our devices is the Edge TPU coprocessor. This is a small ASIC built by Google that's specially-designed to execute state-of-the-art neural networks at high speed, with a low power cost.

The Edge TPU is capable of performing 4 trillion operations (tera-operations) per second (TOPS), using 0.5 watts for each TOPS (2 TOPS per watt).

Mustang-T100-T5 Block Diagram

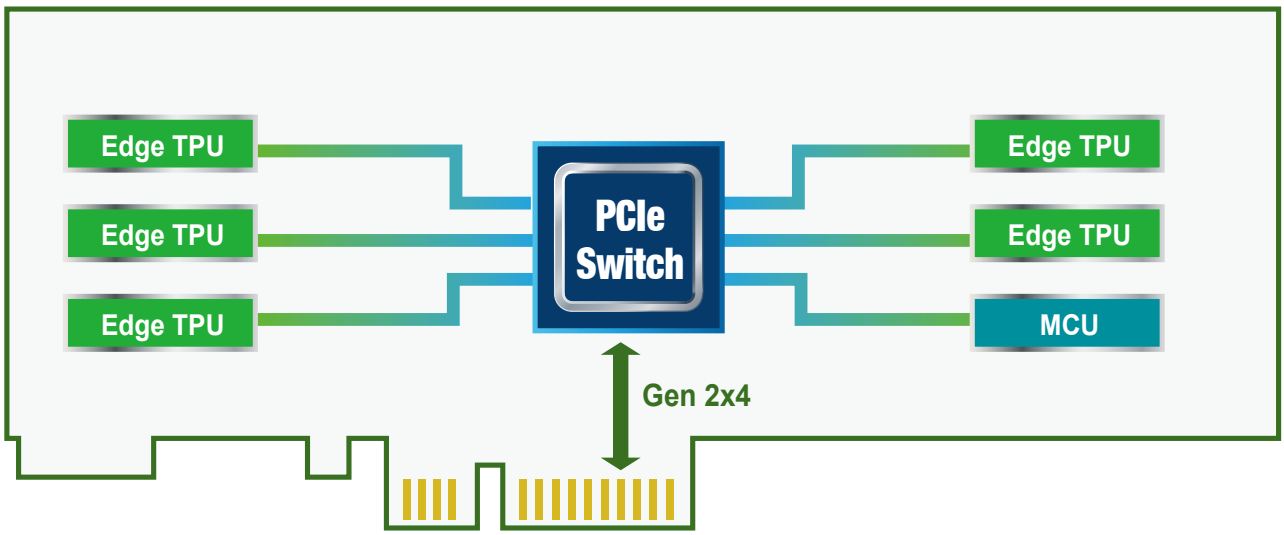

Mustang-T100-T5 Dimensions (Unit: mm)

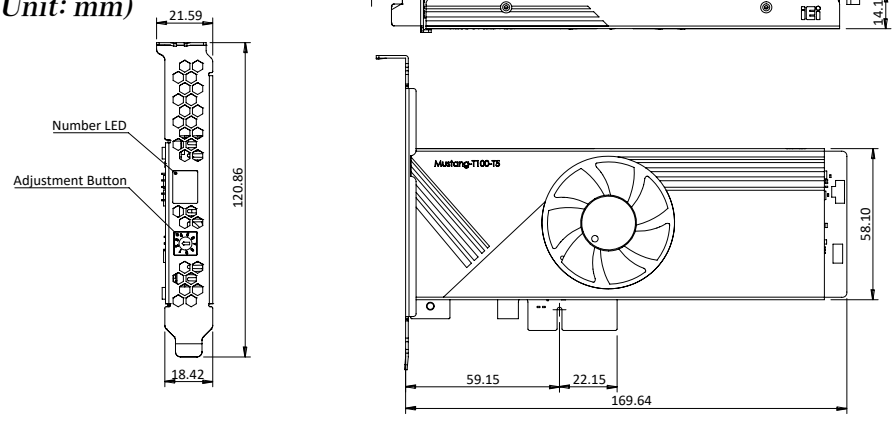

HTB-300-XA

Nvidia Jetson AGX Xavier 8GB/32GB processor

NEW



Feature

- Medical grade fan-less embedded system
- Nvidia Jetson AGX Xavier 32GB processor
- Modularized high speed ground plane header (SSD/ SDI input/ HDMI input)
- Integrated AI Box PC bundle with Linux Ubuntu 18.04
- PCIe x [8] expansion (option)
- Support TPM 2.0
- Edge AI inference device

Specifications

Model Name	HTB-300-XA
Processor	8-core ARM v8.2 64-bit CPU, 8MB L2 + 4MB L3
GPU	NVIDIA Volta™ architecture with 512 NVIDIA CUDA cores and 64 Tensor cores 11 TFLOPS (FP16) 22 TOPS (INT8)
Memory	32 GB 256-bit LPDDR4x 2133MHz - 137GB/s
Networking	2 x RJ 45 LAN Chip: Marvell 88E1512
GPIO	GPIO 4x in, 4x out
Storage	32GB eMMC 5.1 Support NVMe SSD by M.2 interface 1 x SD card slot for data encryption
Expansion Slot	1 x Modularized high speed ground plane header (SSD/ SDI input/ HDMI input) 1 x PCIe Gen3 [x8] slot 1 x M.2 M key 2242/60/80 For SSD 1 x M.2 E key for WiFi & Bluetooth
Display	1 x HDMI (Max. 3840 x 2160 @ 60HZ) 1 x DP port (Max. 3840 x 2160 @ 60HZ)
Audio	1 x 3W speaker
USB	4 x USB 3.2 Gen1 1 x USB 2.0 Type A (internal) for storing encrypted AI model and programming internal flash 1 x USB 2.0 Type C (internal) UART debug port
Serial Port	1 x RS-232/422/485
TPM	Support TPM 2.0
Others	1 x Power Button (RGB color LED)
Power input	100 ~ 240 VAC
Type/Watt	65W medical adapter
Thermal	Fanless
Operating Temperature	0~40 °C (32~104 °F)
Operating Humidity	Relative humidity: 10%~95% non-condensing
Operating Shock	Half-sine wave shock 5G, 11ms, 100 shocks per axis
Operation Vibration	MIL-STD-810G 514.6C-1 (with SSD)
Dimensions	293mm (L) x 209mm (W) x 82mm (H)
Weight	3.05 Kg
Certification	IEC 60601-1-2: 2014 (Edition 4.0) IEC 60601-1:2005+AMD1:2012 (Edition 3.1)
Operating System	Linux for Jetson AGX Xavier
	File system: Ubuntu 18.04, Kernel version:4.9

Ordering Information

Part No.	Description
HTB-300-XA/32G-R10	AI box PC with NVIDIA Xavier module(8 core ARM CPU with 512 CUDA cores) , 32GB LPDDR4 memory,32GB eMMC 5.1, 1 x PCIe by 8 expansion, 19V/65W medical power adapter, white color, R10
HTB-300-XA/32G-SDI-R10	AI box PC with NVIDIA Xavier module(8 core ARM CPU with 512 CUDA cores) , 32GB LPDDR4 memory,32GB eMMC 5.1, with SDI input and PCIe by 8 expansion, 19V/65W medical power adapter, white color, R10
HTB-300-XA/32G-HDMI-R10	AI box PC with NVIDIA Xavier module(8 core ARM CPU with 512 CUDA cores) , 32GB LPDDR4 memory,32GB eMMC 5.1, with HDMI input and PCIe by 8 expansion, 19V/65W medical power adapter, white color, R10
HTB-300-XA/32G-SSD-R10	AI box PC with NVIDIA Xavier module(8 core ARM CPU with 512 CUDA cores) , 32GB LPDDR4 memory,32GB eMMC 5.1, with 2nd M.2 SSD slot and PCIe by 8 expansion, 19V/65W medical power adapter, white color, R10

Fully Integrated I/O



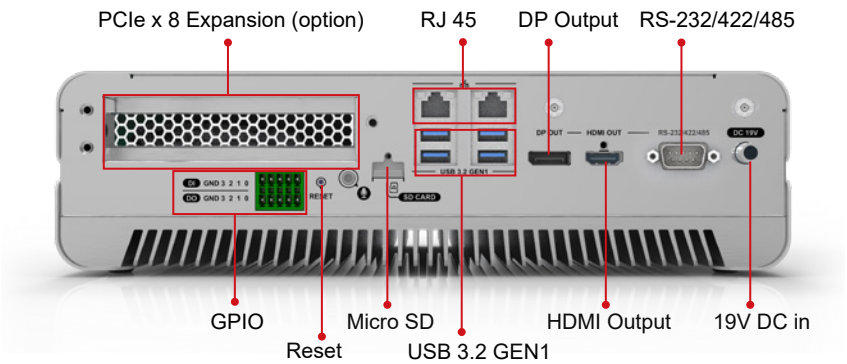

HTB-300-XA
Dimensions (Unit: mm)

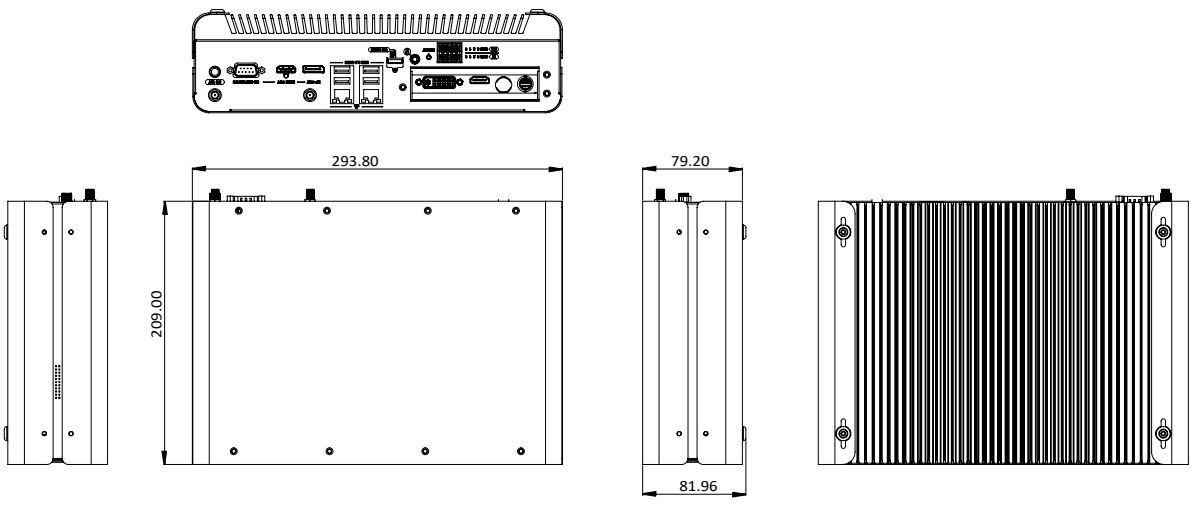

IEI GRAND AI Training Server System



AI Training System

The AI training system GRAND-C442 is dedicated for these tasks because it offers a wide range of slots for storage expansion, acceleration cards and video capture, Thunderbolt™ or PoE add-on cards for unlimited data ac-quisition possibilities. In order to develop a useful training model, existing and widely used deep learning training frameworks such as Caffe, Tensor-Flow or Apache MXNet are recommended. These facilitate the definition of the apt architecture and algorithms for a distinct AI application.

Supported Software

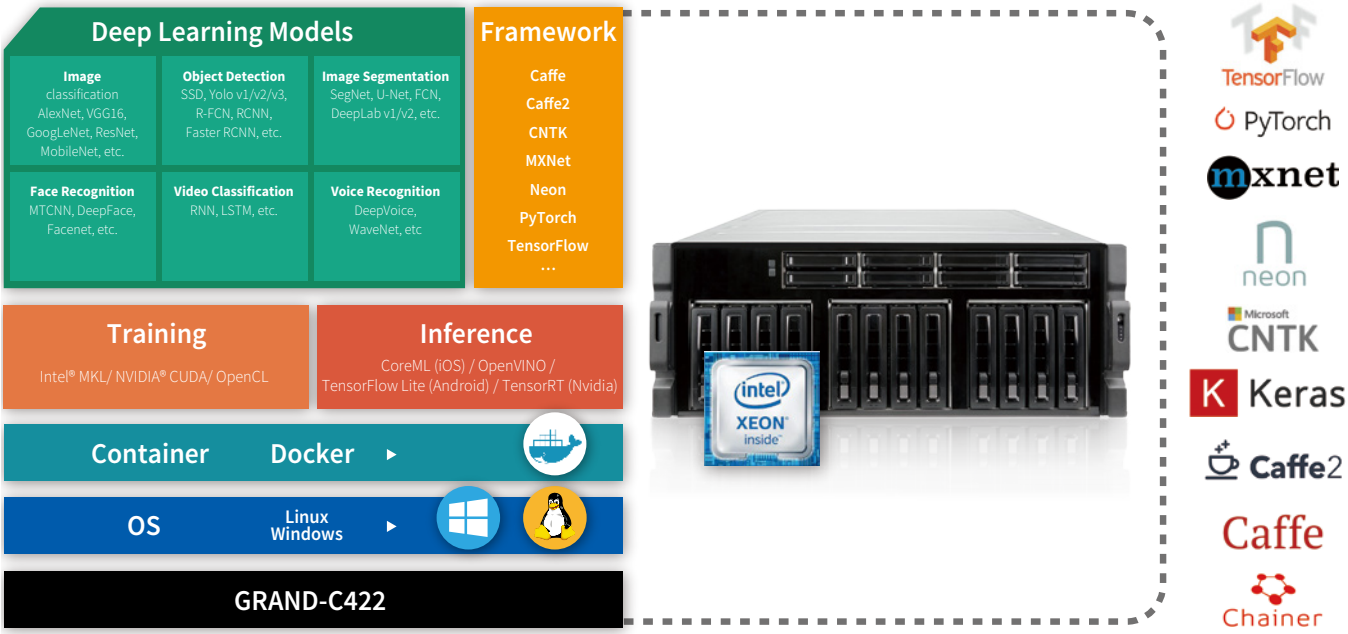

Demand for AI computing is booming

The application of AI computing is absolutely not enough through the CPU computing. With the decentralized architecture, the huge data is calculated to obtain the computing result. Therefore, we have developed a water-cooled chassis system with high expansion capability by adding multiple GPUs, FPGA or VPU acceleration cards for AI deep learning and inference.

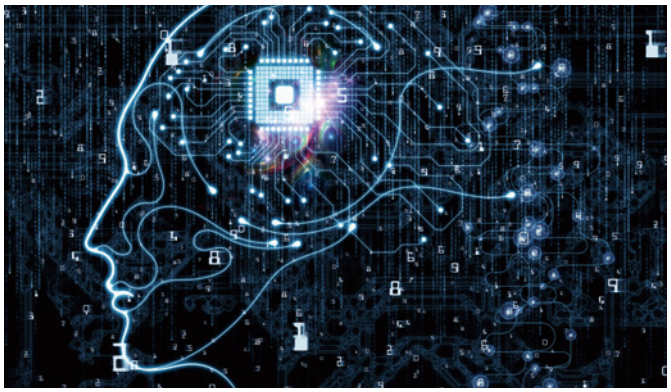



Hyper converged infrastructure

Hyper converged infrastructure (HCI) is scale-out software-defined infrastructure that converges core data services on flash-accelerated, industry-standard servers, delivering flexible and powerful building blocks under unified management.

Efficient, agile, flexible, and integrated, these systems allow for easy scale-out storage, cost-savings, and simplicity to manage your systems. To find out if hyperconverged is the best solution for your Data Center, consider the following.

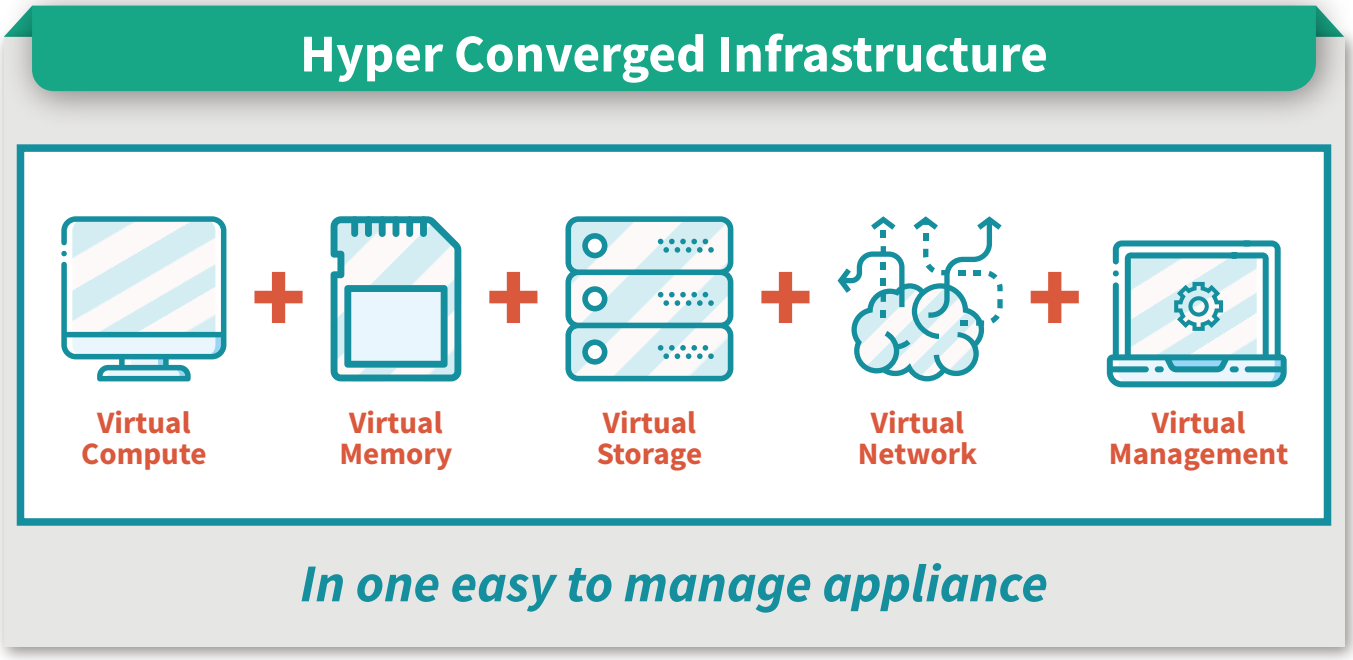

Expandable to suit your needs

AI computing requires huge computing power, so our system can support up to 4 dual-width expansion slots (PCIe x8) and 2 single-width expansion slots (PCIe x4) for maximum expansion ability to meet computing needs.
All six of the backplane slots connect directly to the system host board. This is perfect for applications that require minimal latency.

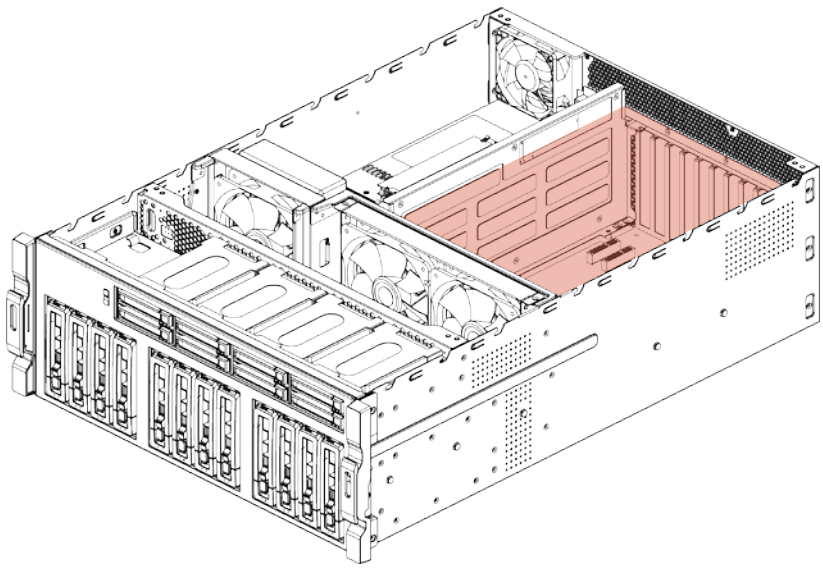

Model Name	PCIe	
GRAND-C422-20D-S1	6 Slots	4 PCIe Gen 3 x8
		2 PCIe Gen 3 x4
GRAND-C422-20D-H1	6 Slots	2 PCIe Gen 3 x16
		1 PCIe Gen 3 x8
		3 PCIe Gen 3 x4
GRAND-C422-20D-H2	7 Slots	5 PCIe Gen 3 x8
		2 PCIe Gen 3 x4

U.2 SSD (GRAND-C422-20D-S supported)

U.2 uses the same concept as a general hard disk. With a connection cable, a hard disk can be installed in the case without occupying the space of the motherboard. Therefore, M.2 and U.2 interfaces can be coexistence because they have different application environment. M.2 is more suitable for laptops or microcomputers, and U.2 is more suitable on a desktop or server. The U.2 interface features high-speed, low-latency, low-power, NVMe standard protocol, and PCIe 3.0 x4 channel. The theoretical transmission speed is up to 32Gbps, while SATA is only 6Gbps, which is 5 times faster than SATA.

SAS HDD

15K SAS 12Gb HDD Compared to the conventional 7200 rpm speeds of SATA HDD, SAS HDD have disk speeds of up to 15,000 rpm, providing much higher read/write performance of up to 300MB/s. Although SAS 12Gb HDD cannot match the IOPS performance of SSD, its cost-per-gigabyte is more favorable. Enterprise-level SAS HDD also offers up to 2 million hours MTBF, providing dependable reliability. If an HDD failure occurs, the stored data may be recoverable, whereas if an SSD fails it can be harder (if not impossible) to recover data. With these considerations, SAS HDD remains the best choice for an enterprise to build a stable, efficient, and affordable storage medium.

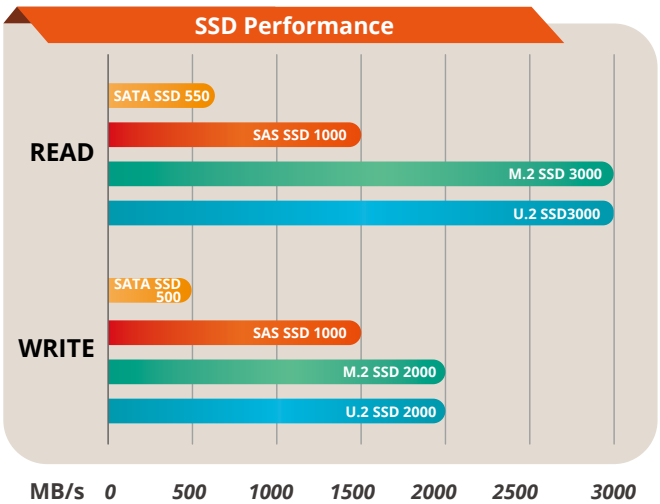

Storage (M.2, SATA, SAS & U.2 by SKU)

The GRAND-C422-20D support M.2 2280 M key (PCIe x4) nVMe, SATA HDD/SSD, SAS HDD & U.2 SSD (by SKU). It has a built-in M.2 2280 M key (PCIe x4) nVMe port and 20 bays of HDD/SSD slots including two U.2 SDD slots. The GRAND-C422-20D supports M.2 solid-state disk which is the next-generation small-sized form factor introduced by Intel after mSATA. It has better performance than general SATA SSD but it is lighter and more power-saving.

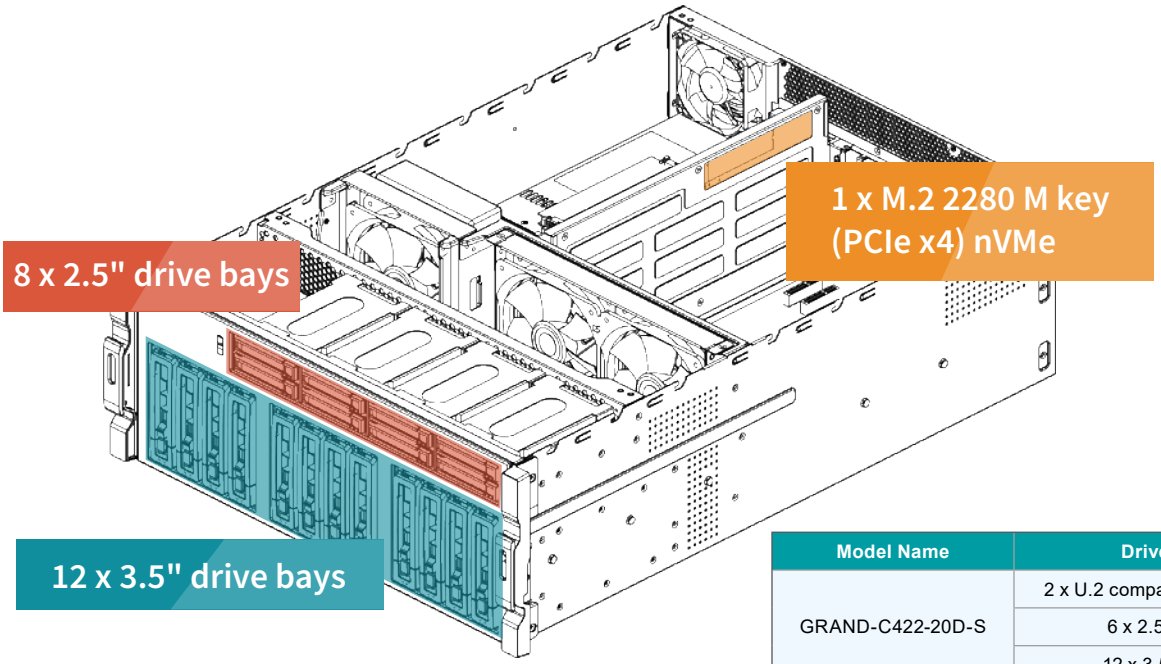

Model Name	Drive Bay
GRAND-C422-20D-S	2 x U.2 compatiable to SATA
	6 x 2.5” SATA
	12 x 3.5” SATA
GRAND-C422-20D-H	8 x 2.5” SAS/SATA
	12 x 3.5” SAS/SATA

Water Cooling System for CPU

IEI uses the latest 14nm Intel Xeon Processor W family which uses the LGA2066 interface and Skylake-SP architecture with 4, 6, 8, 10, 14 and 18 core versions.
High performance means higher power consumption, therefore IEI designed water cooling system for CPU with smaller size, higher efficiency cooling system makes CPU cooler and keep the high performance, and it can support up to 250W TDP.

	Water Cooling	Air Cooling
		
Cooler Size	Small	Large
Working Noise	Small	Large
Cooling Efficiency	Better	Worse

GRAND-C422-20D-S

The GRAND-C422-20D is an AI training system which has maximum expansion ability to add in AI computing accelerator cards for AI model training or inference.



Feature

- Intel® Xeon® W family processor supported
- 6 x PCIe Slot, up to 4 dual width GPU cards
- Water cooling system on CPU
- Support two U.2 SSD
- Support one M.2 SSD M-key slot (NVMe PCIe 3.0 x4)
- Support 10GbE network
- IPMI remote management

Specifications

Model		GRAND-C422-20D-S
Chassis	Dimensions (H x W x D)	176.15 x 480.94 x 644 mm
	System Fan	2 x 120 mm, 12V DC
	Chassis Construction	4U, Rackmount
Motherboard	CPU	Intel® LGA-2066 Xeon® W Family processor
	Processor Cooling	Water cooling system
	Chipset	C422
	Memory	Total slot: 4 x DDR4 ECC RDIMM / LRDIMM Memory expandable up to:256GB (4 x 64GB)
Security	TPM	1 x TPM 2.0 Pin header
IPMI	IPMI Solution	IPMI LAN port, IPMI VGA display
Storage	Hard Drive	12 x 2.5" / 3.5" drive bay 8 x 2.5" drive bay
	M.2	1 x 2280 M key (PCIe x4) built in on SBC
	U.2	2 x U.2 SSD drive bay compatible to SATA
Networking	Ethernet IC	1 GbE NIC: Intel® i210-AT with NCSI support 10 GbE NIC: Aquantia AQC107
I/O Interface	USB 3.2 Gen 1	4
	USB 2.0	2
	Ethernet	1 x 1GbE RJ-45 combo LAN ports / IPMI 1 x 10GbE RJ-45 LAN port
	Display	1 x IPMI VGA display
	Buttons	Power button
Internal I/O	COM port	2 x RS-232 pin header
	USB 3.2 Gen 1	2 x USB 3.2 Gen 1 (5Gb/s) pin header
	USB 2.0	2 x USB 2.0 pin header, 1 x USB 2.0 type A
Indicator	LEDs	10 GbE, Status, LAN, Storage Expansion Port Status
	LCM	LCM, 2 buttons
Expansion	PCIe	4 x PCIe Gen 3 x8 2 x PCIe Gen 3 x4
Power	Power Input	100-240V AC, 47-63Hz
	Power Consumption	In Operation: 285W
	Type/Watt	Redundant Power 1200W
Reliability	Operating Temperature	0~40˚C
	Relative Humidity	5 to 95% non-condensing, wet bulb: 27˚C
	Weight	23.59 kg
	Certification	CE/FCC
OS	Support OS	Windows server 2016 Linux

Packing List

Flat head screws (for 2.5” HDD)	Flat head screws (for 3.5” HDD)
1 x Cat5e LAN cable	2 x Power cord
1 x Cat6A LAN cable	1 x QIG

Options

Item	Part No.	Description
Slide Rail	RAIL-A02-90	Kingslide Rail kit, maximum load 90 kg

Model Naming Convention

GRAND-C422-20D-S1A1

RAID type
- S : Software RAID
- H : Hardware RAID

Serial number

CPU
- A : W-2223
- B : W-2235
- C : W-2245
- D : W-2255
- E : W-2295

RAM
- 1 : 32GB (8GB x 4 = 32GB)
- 2 : 64GB (16GB x 4 = 64GB)
- 3 : 128GB (32GB x 4 = 128GB)
- 4 : 256GB (64GB x 4 = 256GB)

Ordering Information

Part No.	Description
GRAND-C422-20D-S1A1-R10	20-bay (12 x 3.5", 8 x 2.5") 4U Rackmount, Intel® Xeon® W-2223 with C422 chipset, 32G DDR4 w/ECC, 6 x PCIe expansion slot, and 1200W redundant PSU, RoHS
GRAND-C422-20D-S1B2-R10	20-bay (12 x 3.5", 8 x 2.5") 4U Rackmount, Intel® Xeon® W-2235 with C422 chipset, 64G DDR4 w/ECC, 6 x PCIe expansion slot, and 1200W redundant PSU, RoHS
GRAND-C422-20D-S1C3-R10	20-bay (12 x 3.5", 8 x 2.5") 4U Rackmount, Intel® Xeon® W-2245 with C422 chipset, 128G DDR4 w/ECC, 6 x PCIe expansion slot, and 1200W redundant PSU, RoHS
GRAND-C422-20D-S1D3-R10	20-bay (12 x 3.5", 8 x 2.5") 4U Rackmount, Intel® Xeon® W-2255 with C422 chipset, 128G DDR4 w/ECC, 6 x PCIe expansion slot, and 1200W redundant PSU, RoHS
GRAND-C422-20D-S1E4-R10	20-bay (12 x 3.5", 8 x 2.5") 4U Rackmount, Intel® Xeon® W-2295 with C422 chipset, 256G DDR4 w/ECC, 6 x PCIe expansion slot, and 1200W redundant PSU, RoHS

I/O Interface

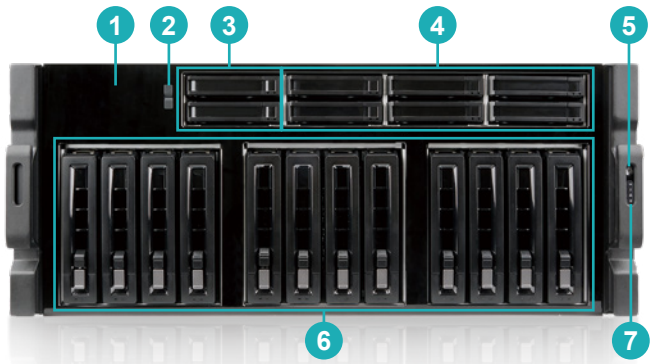

1. LCM
2. LCM control buttons
3. Two U.2 SSD drive bays compatible with SATA
4. Six 2.5" SATA 6Gb/s drive bays
5. Power button
6. Twelve 2.5"/3.5" SATA 6Gb/s drive bays
7. LED Indicator:
   - 10 10GbE
   - i System status
   - LAN
   - Storage expansion port status

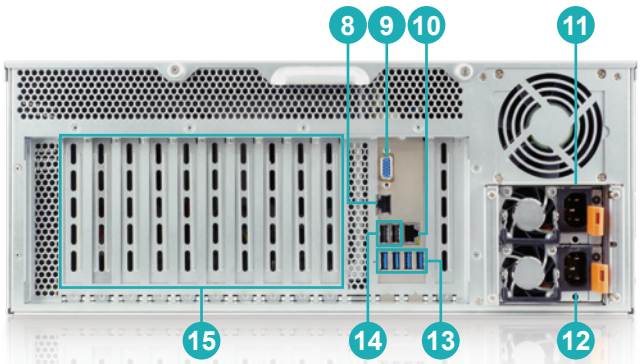

8. 10 Gigabit Ethernet port
9. IPMI VGA port
10. Gigabit Ethernet port with NCSI support
11. Power supply unit 1
12. Power supply unit 2
13. Four USB 3.1 Gen 1 ports
14. Two USB 2.0 ports
15. PCIe expansion slots

GRAND-C422-20D Series Dimensions (Unit: mm)

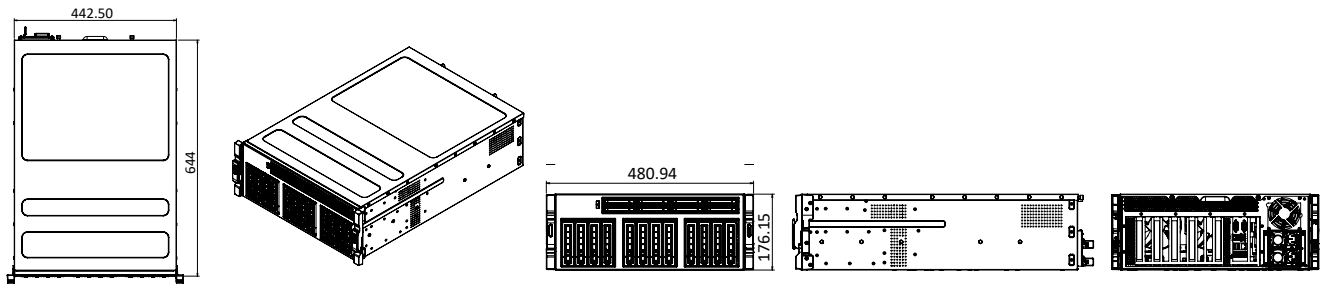

GRAND-C422-20D-H

The GRAND-C422-20D is an AI training system which has maximum expansion ability to add in AI computing accelerator cards for AI model training or inference.



Feature

- Intel® Xeon® W family processor supported
- Up to 7 x PCIe Slot, with dual width expansion card support
- Water cooling system on CPU
- Support SAS SSD
- Support one M.2 SSD M-key slot (NVMe PCIe 3.0 x4)
- Support 10GbE network
- Support Hardware RAID
- IPMI remote management

Specifications

Model		GRAND-C422-20D-H1	GRAND-C422-20D-H2
Chassis	Dimensions (H x W x D)	176.15 x 480.94 x 644 mm	
	System Fan	2 x 120 mm, 12V DC	
	Chassis Construction	4U, Rackmount	
Motherboard	CPU	Intel® LGA-2066 Xeon® W Family processor	
	Processor Cooling	Water cooling system	
	Chipset	C422	
	Memory	Total slot: 4 x DDR4 ECC RDIMM / LRDIMM Memory expandable up to:256GB (4 x 64GB)	
Security	TPM	1 x TPM 2.0 Pin header	
IPMI	IPMI Solution	IPMI LAN port, IPMI VGA display	
Storage	Hard Drive (need to install RAID card)	12 x 2.5” / 3.5” drive bay (support SAS /SATA) 8 x 2.5” drive bay (support SAS /SATA)	
	M.2	1 x M.2 (PCIe Gen 3 x4) built in on SBC	
	U.2	2 x U.2 SSD drive bay compatible to SATA	
Networking	Ethernet IC	1 GbE NIC: Intel® i210-AT with NCSI support 10 GbE NIC: Aquantia AQC107	
I/O Interface	USB 3.2 Gen 1	4	
	USB 2.0	2	
	Ethernet	1 x 1GbE RJ-45 combo LAN ports / IPMI 1 x 10GbE RJ-45 LAN port	
	Display	1 x IPMI VGA display	
	Buttons	Power button	
Internal I/O	COM port	2 x RS-232 pin header	
	USB 3.2 Gen 1	2 x USB 3.2 Gen 1 (5Gb/s) pin header	
	USB 2.0	2 x USB 2.0 pin header, 1 x USB 2.0 type A	
Indicator	LEDs	10 GbE, Status, LAN, Storage Expansion Port Status	
	LCM	LCM, 2 buttons	
Expansion	PCIe	2 PCIe Gen 3 x16 1 PCIe Gen 3 x8 3 PCIe Gen 3 x4	5 PCIe Gen 3 x8 2 PCIe Gen 3 x4
Power	Power Input	100-240V AC, 47-63Hz	
	Power Consumption	In Operation: 285W	
	Type/Watt	Redundant Power 1200W	
Reliability	Operating Temperature	0~40˚C	
	Relative Humidity	5 to 95% non-condensing, wet bulb: 27˚C	
	Weight	23.59 kg	
	Certification	CE/FCC	
OS	Support OS	Windows server 2016 / Linux	

Packing List

Flat head screws (for 2.5” HDD)	Flat head screws (for 3.5” HDD)
1 x Cat5e LAN cable	2 x Power cord
1 x Cat6A LAN cable	1 x QIG

Options

Item	Part No.	Description
Slide Rail	RAIL-A02-90	Kingslide Rail kit, maximum load 90 kg
RAID Controller	7F200-SMARTRAID315424I-RS	Microsemi Adaptec SmartRAID 3154-24i

Model Naming Convention

GRAND-C422-20D-**S 1 A 1**

RAID type
- S : Software RAID
- H : Hardware RAID

Serial number

CPU
- A : W-2223
- B : W-2235
- C : W-2245
- D : W-2255
- E : W-2295

RAM
- 1 : 32GB (8GB x 4 = 32GB)
- 2 : 64GB (16GB x 4 = 64GB)
- 3 : 128GB (32GB x 4 = 128GB)
- 4 : 256GB (64GB x 4 = 256GB)

Ordering Information

Part No.	Description
GRAND-C422-20D-H1-R10	Barebone, 20-bay (12 x 3.5”, 8 x 2.5”) 4U Rackmount, support hardware RAID, Intel® Xeon W series with C422 chipset, 6 x PCIe expansion slot, and 1200W redundant PSU, RoHS
GRAND-C422-20D-H1A1-R10	20-bay (12 x 3.5”, 8 x 2.5”) 4U Rackmount, pre-install microsemi 3154-24i RAID controller, Intel® Xeon® W-2223 with C422 chipset, 32G DDR4 w/ECC, 6 x PCIe expansion slot, and 1200W redundant PSU, RoHS
GRAND-C422-20D-H2-R10	Barebone, 20-bay (12 x 3.5”, 8 x 2.5”) 4U Rackmount, support hardware RAID, Intel® Xeon W series with C422 chipset, 7 x PCIe expansion slot, and 1200W redundant PSU, RoHS
GRAND-C422-20D-H2A1-R10	20-bay (12 x 3.5”, 8 x 2.5”) 4U Rackmount, pre-install microsemi 3154-24i RAID controller, Intel® Xeon® W-2223 with C422 chipset, 32G DDR4 w/ECC, 7 x PCIe expansion slot, and 1200W redundant PSU, RoHS

I/O Interface

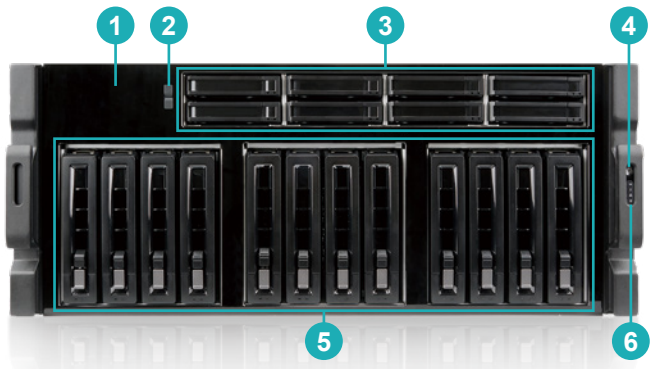

1. LCM
2. LCM control buttons
3. 2.5” SAS/SATA drive bays
4. Power button
5. Twelve 2.5”/3.5” SAS/SATA drive bays
6. LED Indicator:
   - 10 10GbE
   - i System status
   - LAN
   - Storage expansion port status

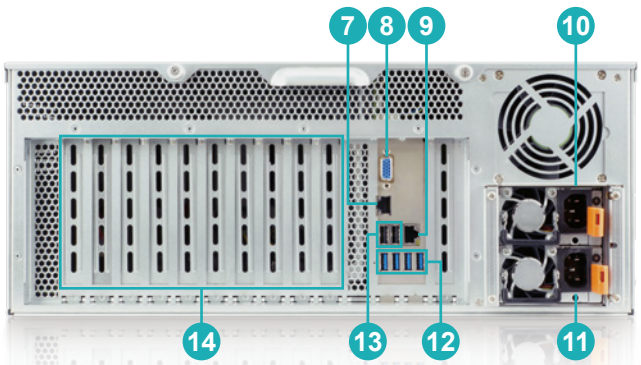

7. 10 Gigabit Ethernet port
8. IPMI VGA port
9. Gigabit Ethernet port with NCSI support
10. Power supply unit 1
11. Power supply unit 2
12. Four USB 3.1 Gen 1 ports
13. Two USB 2.0 ports
14. PCIe expansion slots

GRAND-C422-20D-H1

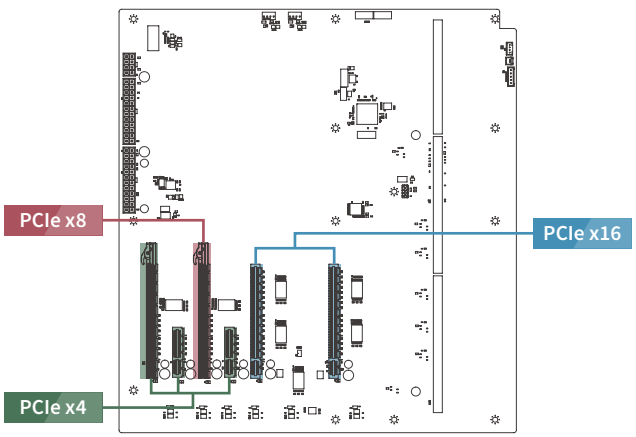

GRAND-C422-20D-H2

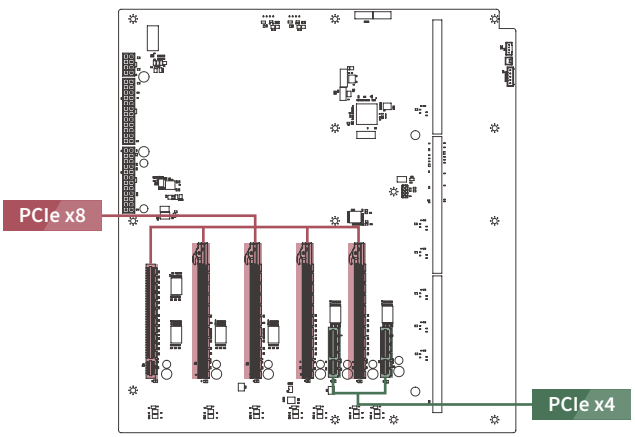

PUZZLE Series Technology

4-Speed Multi-Gigabit

The PUZZLE solution is equipped with a high-performance Multi-Gig Ethernet controller, Marvell AQtion AQC111C 5GbE, to offer a seamless Multi-Gig upgrade path for network applications. The industry proven Marvell AQrate PHY technology delivers 5GbE network connectivity speed through 100 meters of the Cat 5e cabling. Therefore, end-users can easily maximize the benefit of the existing Cat 5e cabling.

Standard Cat 5e at 5 Gbps, 2.5 Gbps, 1 Gbps, 100 Mbps
Require no change to the existing infrastructure or cabling



	1 Gbps	2.5 Gbps	5 Gbps	10 Gbps
CAT 5e	✔	✔	✔	✘
CAT 6	✔	✔	✔	55m
CAT 6A	✔	✔	✔	✔

Up to 5X faster transfer speeds



Backward compatible with 5GBASE-T / 2.5GBASE-T / 1000BASE-T / 100BASE-TX

- √ 5 Gbps
- √ 1 Gbps
- √ 2.5 Gbps
- √ 100 Mbps

PCI Express 4.0

- Higher performance storage (next generation NVME) with double the speed of PCIe 3.0
- Faster Ethernet capability to eliminate throughput bottlenecks for data intensive applications (100/200G NIC cards)
- FPGA/GPU accelerators to support emerging machine learning and deep learning workloads with uncompromised PCIe 4.0 bandwidth and lowest latency

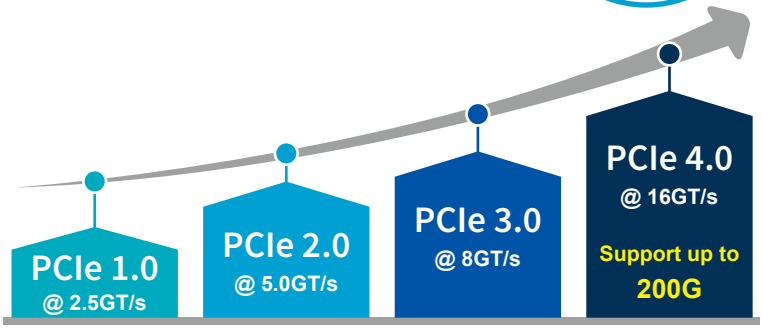

Intel® Select Solutions for uCPE for CentOS/ADVA

intel select solution

ADVA™

CentOS

- NFV-based edge computing
- Optimized software
- Virtualized and non- virtualized services

NFVI Solution
ADVA Ensemble Connector

- Manageability and Operability
- Reducing costs
- Accelerating service provision



➤ PUZZLE-IN004

To support uCPE platforms, Intel® Select Solutions for uCPE provide a foundation for the development of uCPE products with a solution reference design and verification of performance.

Faster Evaluation

Fast and Easy Deployment

Workload-optimized Performance

Intel® QuickAssist Technology

Intel® QuickAssist Technology (Intel® QAT) integrates hardware acceleration of compute intensive workloads, such as Bulk Cryptography, Public Key Exchange & Compression on Intel® Architecture Platforms.

- Intel's 3rd Generation Technology
- Sub Gb/s to 100 Gb/s Rates
- Networking, Storage, Big Data, Cloud, Datacenter, and HPC Applications Receive High Performance Execution of:
  - » Cryptographic Ciphers
  - » Authentication
  - » Public Key Exchange & Key Protection
  - » Compression/Decompression
- Enables Standard Server & Cloud Platforms to Offer Ubiquitous Security and Compression/ Decompression
- Provides a Converged Platform Architecture for Cloud, Networking, Storage & Big Data

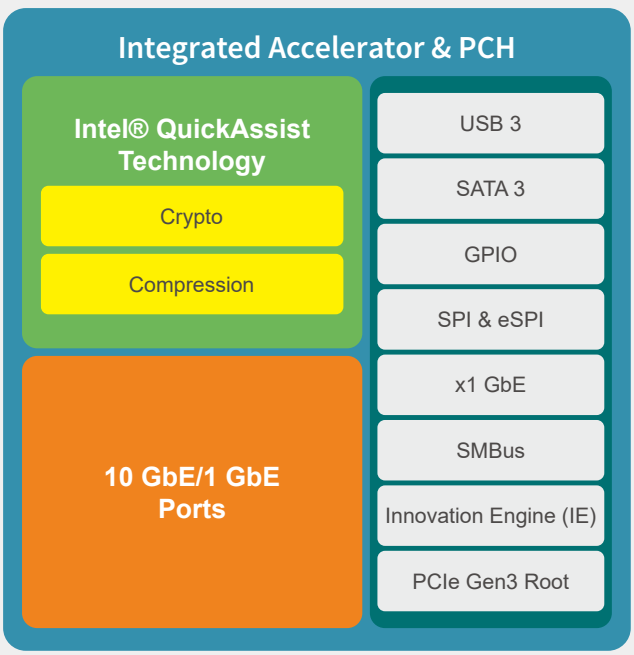

Hot-swappable SSD & Redundant Power Supply

Hot-swappable SSD

High reliability design is a very important factor for network service. The hot-swap is desirable to change the configuration or repair a working system without interrupting its operation. The hot-swappable SSD and redundant power supply can provide infinitive service to avoid shutting down and restarting complex equipment, because it is essential for equipment to be continuously active.





Redundant Power Supply

The PUZZLE series contains two 300W power supply units for redundant power supply. Each power supply unit is capable of powering the entire computer so the computer runs with only one unit. If one fails, the other power supply starts running to maintain continuous operation.

Smart Fan Operation

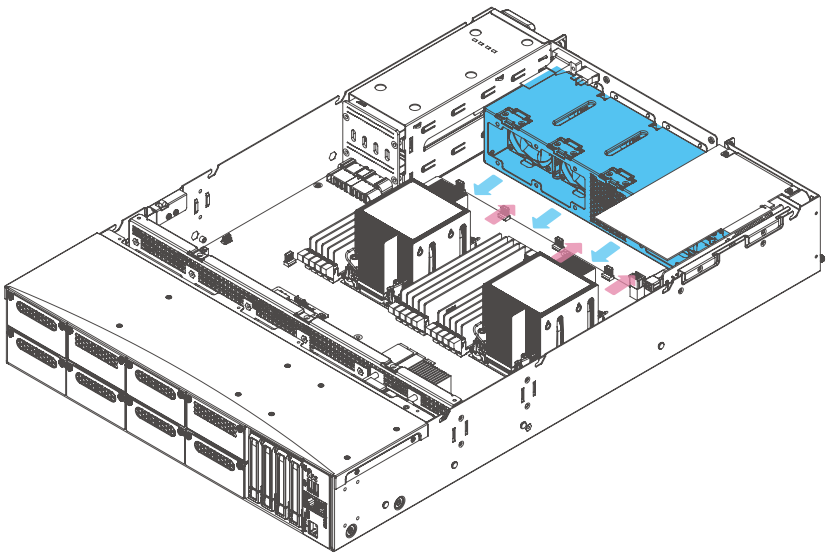

Users can define CPU fan and system fan speed and temperature profile in the BIOS menu. When the system is in idle or running less demanding tasks, smart fan is able to bring down the level of noise produced by rotating fans. The adjustable settings allow the PUZZLE series run with less noise while extending the fan's lifespan, enhancing system stability and durability.

PUZZLE Series

With fan speed and temperature trigger settings set, the fan speed can change seamlessly according to temperature readings.

Traditional System

Traditional system fan operation is detected by system's ON (fan at full speed) and OFF statuses.

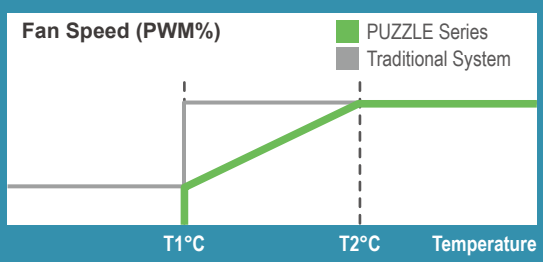

uCPE Solution (Universal Customer Premise Equipment)

uCPE consists of virtual network functions (VNFs) running on a standard operating system hosted on an open server with NFV technology. Now with NFV technology, we can create several virtual machines and install these VNFs in a x86 or ARM based uCPE. VNFs could include popular software services such as a virtual firewall, virtual load-balancing, or other software-defined wide area network (SD-WAN) service. Besides, with NFV orchestration, uCPE could serve as an edge computing system or an AI inference computing system.

Lower Power Consumption

uCPE can run several VNFs to build up a network enviroment instead of running several phycial network appliances. Running an uCPE can save engergy.

Lower CapEx & OpEx

Reduce the Consumption of CapEx and OpEx including for management time and effort, maintenance and contracts or software licensing etc.

Various Solutions

The true value of openness comes from being able to combine a mix of open source and proprietary software components to deliver an innovative service.

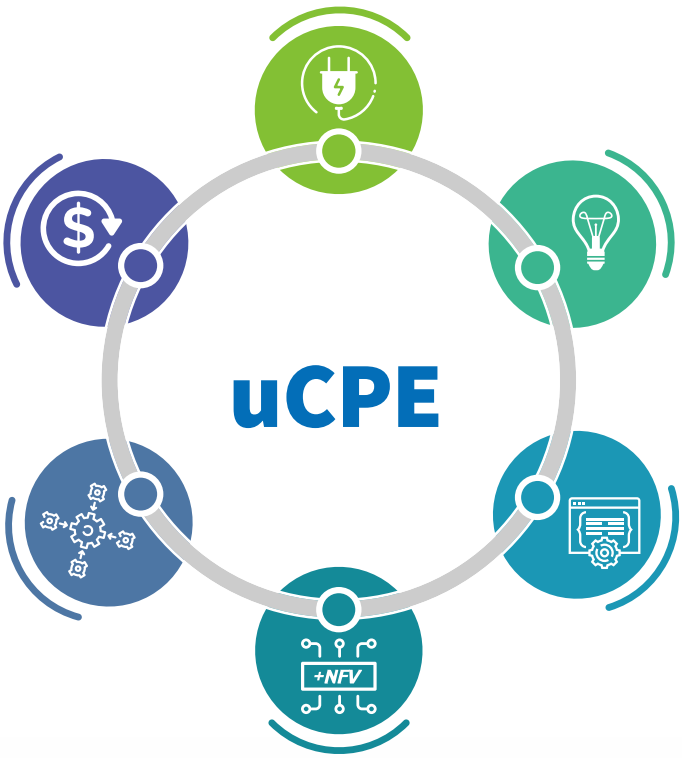

Standard Hardware

Service providers simplify customer site deployments by using a panoply of dedicated appliances with VNFs running on a single universal platform.

Open Source Software

Open source software reduces time to market and the risk of vendor lock-in.

Flexible

The uCPE helps service providers and their customers from suffering hardware vendor lock-in. It creates the flexibility of manageability through NFV.



Unmanned Parking Management System



Flexible Design with Slim Form Factor



Multiple Upgrade Options



Highly Compatible with Major Operating Systems

As a smart integrated parking service provider, the optimal system should solve the challenges, such as space limitation, multiple tasks and hard compatibility of software and hardware.

The PUZZLE can be used as a central parking management server with all the components connected to it for feeding their data back to the central server. With the space limitation of modulized parking system, it is an ideal networking appliance for this application because it has a height of only 1.75 inches, supports 1U rack mount and is equipped with powerful Intel® processor. It has high flexibility, capable of integrating server functions in one device through add-on cards or VPU cards. Moreover, it supports Linux and Windows operating system, so no matter what operating system you decide to use, the software applications are fully compatible with the hardware. That means fewer headaches, quicker development times, and more options.

Security and Surveillance



Easily Upgrade with PuIM Module



High Flexibility of PCIe Expansion

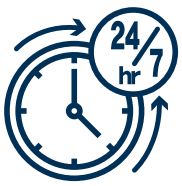

Uninterrupted 24-7 Service

Current video surveillance systems are generally too slow, provide inadequate video quality, and have limited expansion capabilities, impeding future expansion and upgrades.

The PUZZLE series is a high-speed, high-definition, and highly scalable hardware-integrated product that provides NVR, VMS, IPWALL and intelligent CCTV. It offers several easy add-ons, expansion options, and PuIM networking module slots that allow for the simple addition of an LCM display, or other bandwidth from 1GbE to 100GbE. By adding a PCIe expansion card, it could feature a graphics card or VPU for powerful AI video analysis. It also supports Intel® vPro® to provide powerful centralized management of networked computers and this reduces the number of times a technician has to physically go to the hardware, resulting in a 27% reduction in TCO. Beside, designed with redundant power supply and automated backup functions, it gives users uninterrupted 24-7 surveillance service. Hence, based on its slim form factor, it can be deigned as an pocket surveillance station to increase mobility, and easily deployed in anywhere anytime.

Next Generation Firewall

Easily Upgrade with PuIM Module

Higher Efficiency of Virtualization

Linux-tested Software Compatibility

The traditional route of a dedicated firewall hardware appliance is too bulky and costly. The PUZZLE series is built with powerful Off-The-Shelf (OTS) networking computer parts, and customizable with PuIM network modules to provide a powerful hardware base for network appliance design. It features eight GbE ports as standard, with expansion options that include 1 Gb/s, 10 Gb/s, and 25 Gb/s network connections. It is designed and tested to support applications for virtual machines, virtualization, and containers such as Docker. Multiple isolated applications can be installed on a single hardware appliance. In addition, all hardware in the PUZZLE is verified to work with Linux (specifically Ubuntu), so users can leverage all the goodness of open-source software to quickly deploy and install additional software.

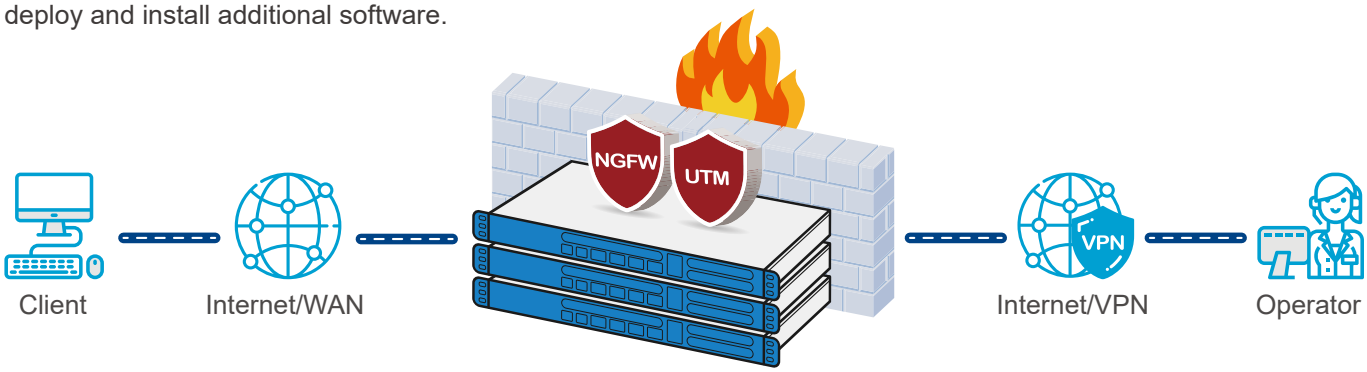

Network AI Solution - PUZZLE Dev. Kit

Puzzle Dev. Kit is an AI hardware ready system ideal for deep learning inference computing to enable faster, deeper insights for your customers and your business. It supports graphics cards, and Intel® FPGA and VPU acceleration cards to provide additional computational power and end-to-end solutions. Built-in with NVIDIA TensorRT, QNAP QuAI, or Intel® OpenVINO AI development toolkit, it is able to deploy your solutions faster than ever.

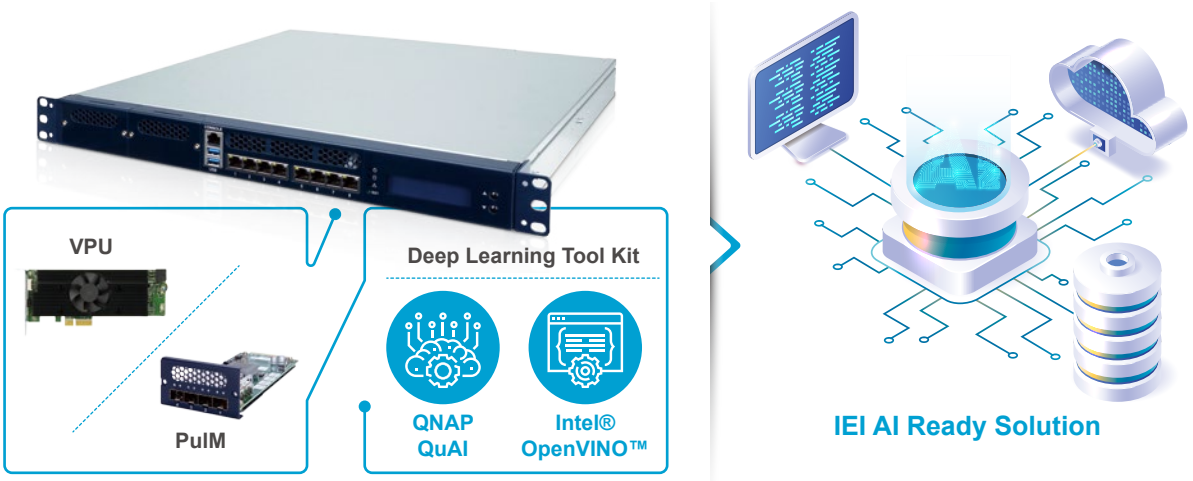

PUZZLE Series Selection Guide





		PUZZLE-IN005	PUZZLE-IN001	
			PUZZLE-IN001-XE	PUZZLE-IN001-i3T
Platform	Form Factor	2U	1U	
	CPU	Intel® Ice-Lake LGA-4189 Xeon® Scalable Processor	Intel® Xeon® E-2136 processor, 6C/12T, up to 4.50 GHz	8th Generation Intel® Core™ i3-8100T processor, 4C/4T, up to 3.10 GHz
	Chipset	Intel® C627A	Intel® C246	
Memory	Memory Technology	DDR4 3200MHz ECC RDIMM / LRDIMM	2 x DDR4 2400MHz ECC/Non-ECC UDIMM	
	Memory Capacity	Up to 1280GB (20 x 64GB)	Up to 32GB	
	Memory Socket	20 x 288-pin DIMM	2 x 288-pin DIMM	
Network and Security	Network Acceleration and Security Function	• Intel® AES New Instructions • Intel® QuickAssist Technology (Intel® QAT) • Intel® Virtualization Technology (Intel® VT) • Intel® Trusted Execution Technology (Intel® TXT)	• Intel® AES New Instructions • Intel® Software Guard Extensions (Intel® SGX) • Intel® Memory Protection Extensions (Intel® MPX) • Intel® Trusted Execution Technology	
	TPM	1 x TPM 2.0 Pin header	1 x TPM 2.0 Pin header	
IPMI	IPMI solution	1 x iRIS-2400 module	N/A	
Networking	Ethernet IC	1 GbE NIC: Intel® i210-AT with NCSI support 1 GbE NIC: Intel® i219	1 GbE NIC: Intel® i211-AT	
	Ethernet Port	2 x 1GbE RJ45 ports (1 x IPMI Lan)	8 x 1GbE RJ45 LAN ports	
	Bypass	N/A	N/A	
	Network Module Slot	8 x Networking Module Slot	2 x PuIM module slots	
Expansion Slot	PCIe Slot	1 x PCIe Gen4 x8 (HHHL) slot (single width)	1 x PCIe 3.0 x8 (FHHL) slot, 1 x PCIe 3.0 x4 (FHHL) slots	
	PCIe Mini Card Slot	N/A	1 x PCIe Mini card (PCIe 3.0 & SATA 3.0, USB 2.0)	
	M.2	2 x M.2 M key 2280 Support PCIe Gen3 x4 nVMe	1 x 3042/2260 M.2 B key (SATA 3.0 / USB 3.2 Gen1) Support SATA SSD and 4G LTE module	
Storage	Storage	4 x U.2 SSD drive bay compatible to SATA	2 x 2.5" SATA HDD/SSD bay support SATA 3.0 (6 Gbps)	
	eMMC	N/A	N/A	
	SD Card	N/A	N/A	
External I/O	VGA	1 x VGA port	N/A	
	USB	2 x USB 3.1 Gen 1 (5Gb/s) Type-A ports	2 x USB 3.2 Gen 1	
	Console	1 x RJ45 1 x USB Type-C	1 x RJ45	
Internal I/O	HDMI	N/A	1 x HDMI connecter (optional)	
	USB	1 x USB 2.0 pin header	4 x USB 2.0 (pin header)	
Power and Mechanical	Power Switch	1 x Power Switch	1 x Power Switch	
	Reset Button	1 x Reset Button	1 x Reset Button	
	Power Input	100 V ~ 240 V	100 V ~ 240 V	
	Type/Watt	Redundant Power 1200W, 90V~264V AC	Redundant Power 300W, 90V~264V AC	
	Processor Cooling	2 x Active CPU Cooler	1 x Passive CPU Heatsink	
	System Cooling	5 x Cooling Fans with Smart Fan	4 x Cooling Fans with Smart Fan	
	Antenna Hole	N/A	1 x Antenna hole	
Physical and Environmental	Storage Temperature	-10°C ~ 50°C	-20°C ~ 75°C (-4°F ~ 167°F)	
	Operating Temperature	-20°C ~ 75°C (-4°F ~ 167°F)	0°C ~ 40°C (32°F ~ 104°F)	
	Operating Humidity	Relative humidity: 5%~90% non-condensing	Relative humidity: 5%~90% non-condensing	
	Dimensions (W x L x H) (mm)	438 x 650 x 88 mm	430 x 426 x 44.2	
	Weight	23 KG	7 KG	
OS and Certifications	Certification	CE / FCC / RoHS	CE / FCC / RoHS	
	Operating System	Linux 18.04 (CentOS, Red Hat, Ubuntu, etc.) Windows server 2019	Linux Ubuntu 18.04.04 CentOS 7 / Red Hat / Fedora EPEL Microsoft Windows 10	
Indicators	LCM	N/A	LCM, 2 buttons	
	LED	1 x Power LED, 1 x Storage LED, 1 x Alert LED	1 x Power LED, 1 x Storage LED, 1 x Alert LED	

PUZZLE Series Selection Guide





		PUZZLE-IN001A		PUZZLE-IN002	
		PUZZLE-IN001A-XE	PUZZLE-IN001A-i3T	PUZZLE-IN002-i3T	PUZZLE-IN002-PGT
Platform	Form Factor	1U			
	CPU	Intel® Xeon® E-2136 processor, 6C/12T, up to 4.50 GHz	8th Generation Intel® Core™ i3-8100T processor, 4C/4T, up to 3.10 GHz	8th Generation Intel® Core™ i3-8100T processor, 4C/4T, up to 3.10 GHz	Intel® Pentium® Gold G5400T processor, 2C/4T, up to 3.10 GHz
	Chipset	Intel® C246		Intel® H310	
Memory	Memory Technology	4 x DDR4 2400MHz ECC/Non-ECC UDIMM		DDR4 2400MHz Non-ECC UDIMM	
	Memory Capacity	Up to 64GB		Up to 32GB	
	Memory Socket	4 x 288-pin DIMM		2 x 288-pin DIMM	
Network and Security	Network Acceleration and Security Function	• Intel® AES New Instructions • Intel® Software Guard Extensions (Intel® SGX) • Intel® Memory Protection Extensions (Intel® MPX) • Intel® Trusted Execution Technology		• Intel® AES New Instructions • Intel® Software Guard Extensions (Intel® SGX) • Intel® Memory Protection Extensions (Intel® MPX) • Intel® Trusted Execution Technology	
	TPM	1 x TPM 2.0 Pin header		1 x TPM 2.0 pin header	
IPMI	IPMI solution	N/A		N/A	
Networking	Ethernet IC	5GbE NIC: AQC 111C		1 GbE NIC: Intel® i211-AT	
	Ethernet Port	8 x 5GbE RJ45 LAN ports		6 x 1GbE RJ45 LAN ports	
	Bypass	N/A		N/A	
	Network Module Slot	2 x PuIM module slots		N/A	
Expansion Slot	PCIe Slot	1 x PCIe 3.0 x8 (FHHL) slot 1 x PCIe 3.0 x4 (FHHL) slots		1 x PCIe 3.0 x16 (FHHL) slot (double width)	
	PCIe Mini Card Slot	1 x PCIe Mini card (PCIe 3.0 & SATA 3.0, USB 2.0)		1 x PCIe Mini card (SATA 3.0, USB 2.0) with SIM slot	
	M.2	1 x 3042/2260 M.2 B key (SATA 3.0 / USB 3.2 Gen1) Support SATA SSD and 4G LTE module		1 x M.2 A key (PCIe 2.0 & USB 2.0)	
Storage	Storage	2 x 2.5" SATA HDD/SSD bay support SATA 3.0 (6 Gbps)		2 x 2.5" SATA HDD/SSD bay support SATA 3.0 (6 Gbps)	
	eMMC	N/A		N/A	
	SD Card	N/A		N/A	
External I/O	VGA	N/A		N/A	
	USB	2 x USB 3.2 Gen 1		2 x USB 3.2 Gen 1	
	Console	1 x RJ45		1 x RJ45	
Internal I/O	HDMI	1 x HDMI connecter (optional)		1 x HDMI connecter (optional)	
	USB	4 x USB 2.0 (pin header)		2 x USB 2.0 (pin header)	
Power and Mechanical	Power Switch	1 x Power Switch		1 x Power Switch	
	Reset Button	1 x Reset Button		1 x Reset Button	
	Power Input	100 V ~ 240 V		100 V ~ 240 V	
	Type/Watt	Redundant Power 300W, 90V~264V AC		ATX Power 250W, 90V~264V AC	
	Processor Cooling	1 x Passive CPU Heatsink		1 x Passive CPU heatsink	
	System Cooling	4 x Cooling Fans with Smart Fan		4 x Cooling Fans with Smart Fan	
	Antenna Hole	1 x Antenna hole		1 x Antenna hole	
Physical and Environmental	Storage Temperature	-20°C ~ 75°C (-4°F ~ 167°F)		-20°C ~ 75°C (-4°F ~ 167°F)	
	Operating Temperature	0°C ~ 40°C (32°F ~ 104°F)		0°C ~ 40°C (32°F ~ 104°F)	
	Operating Humidity	Relative humidity: 5%~90% non-condensing		Relative humidity: 5%~90% non-condensing	
	Dimensions (W x L x H) (mm)	430 x 426 x 44.2		430 x 320 x 44.2	
	Weight	7 KG		5 KG	
OS and Certifications	Certification	CE / FCC / RoHS		CE / FCC / RoHS	
	Operating System	Linux Ubuntu 18.04.04 CentOS 7 / Red Hat / Fedora EPEL Microsoft Windows 10		Linux Ubuntu 18.04.04 CentOS 7 / Red Hat / Fedora EPEL Microsoft Windows 10	
Indicators	LCM	LCM, 2 buttons		LCM, 2 buttons	
	LED	1 x Power LED, 1 x Storage LED, 1 x Alert LED		1 x Power LED, 1 x Storage LED, 1 x Alert LED	

PUZZLE Series Selection Guide





		PUZZLE-IN003A		PUZZLE-IN003B	
		PUZZLE-IN003A-C1	PUZZLE-IN003A-C3	PUZZLE-IN003B-C0	PUZZLE-IN003B-C1
Platform	Form Factor	Desktop			
	CPU	Intel® Atom® processor C3558 8M cache, up to 2.20 GHz	Intel® Atom® Processor C3336 4M Cache, 1.50 GHz	Intel® Atom® processor C3758 16M cache, up to 2.20 GHz	Intel® Atom® processor C3558 8M cache, up to 2.20 GHz
	Chipset	Integrated in CPU		Integrated in CPU	
Memory	Memory Technology	DDR4 2133MHz ECC (By CPU) or non-ECC UDIMM, Support DDR4 RDIMM		DDR4 2133MHz ECC (By CPU) or non-ECC UDIMM, Support DDR4 RDIMM	
	Memory Capacity	UDIMM up to 64GB RDIMM up to 128GB		UDIMM up to 64GB RDIMM up to 128GB	
	Memory Socket	2 x 288-pin DIMM	1 x 288-pin DIMM	4 x 288-pin DIMM	
Network and Security	Network Acceleration and Security Function	• Intel® AES New Instructions • Intel® Software Guard Extensions (Intel® SGX) • Intel® Virtualization Technology for Directed I/O (VT-d) • Intel® QuickAssist Technology (Intel® QAT)	• Intel® Virtualization Technology for Directed I/O (VT-d) • Intel® Virtualization Technology (VT-x) • Intel® QuickAssist Technology (Intel® QAT)	• Intel® AES New Instructions • Intel® Software Guard Extensions (Intel® SGX) • Intel® Memory Protection Extensions (Intel® MPX) • Intel® Virtualization Technology for Directed I/O (VT-d) • Intel® QuickAssist Technology (Intel® QAT)	• Intel® AES New Instructions • Intel® Software Guard Extensions (Intel SGX) • Intel® Virtualization Technology for Directed I/O (VT-d) • Intel® QuickAssist Technology (Intel® QAT)
	TPM	1 x TPM 2.0 pin header		1 x TPM 2.0 pin header	
IPMI	IPMI solution	N/A		N/A	
Networking	Ethernet IC	1 GbE NIC: Intel® i211-AT 1 GbE PHY: Marvell 88E1543		1 GbE NIC: Intel® i211-AT 1 GbE PHY: Marvell 88E1512 10 GbE: Intel® X553 integrated in CPU	
	Ethernet Port	4 x GbE from Intel® i211-AT 4 x GbE from Marvell 88E1543	4 x GbE from Intel® i211-AT 2 x GbE from Marvell 88E1543	4 x 1GbE from Intel® i211-AT 2 x 1GbE from Marvell 88E1512 2 x 10 GbE SFP+	
	Bypass	Yes, 2 bypass segments	Yes, 1 bypass segments	N/A	
	Network Module Slot	N/A		N/A	
Expansion Slot	PCIe Slot	N/A		N/A	
	PCIe Mini Card Slot	1 x PCIe Mini card (PCIe 3.0, USB 2.0) with SIM slot		1 x PCIe Mini card (PCIe 3.0, USB 2.0) with SIM slot	
	M.2	1 x M.2 A key (PCIe 3.0 & USB 2.0)		1 x M.2 A key (PCIe 3.0 & USB 2.0)	
Storage	Storage	1 x SATA 3.0 + 1 x 5V power connector (for SATA DOM) 1 x M.2 M key 2260/2280 Support PCIe 3.0 x4 nVME		1 x SATA 3.0 + 1 x 5V power connector (for SATA DOM) 1 x M.2 M key 2260/2280 Support PCIe 3.0 x4 nVME	
	eMMC	1 x eMMC 32GB		1 x eMMC 32GB	
	SD Card	N/A		N/A	
External I/O	VGA	N/A		N/A	
	USB	1 x USB 2.0 1 x USB 3.2 Gen 1		1 x USB 2.0 1 x USB 3.2 Gen 1	
	Console	1 x RJ45		1 x RJ45	
Internal I/O	HDMI	N/A		N/A	
	USB	N/A		N/A	
Power and Mechanical	Power Switch	1 x Power Switch		1 x Power Switch	
	Reset Button	1 x Reset Button		1 x Reset Button	
	Power Input	1 x DC jack		1 x DC jack	
	Type/Watt	12 V DC-in, 60W		12 V DC-in, 60W	
	Processor Cooling	Passive CPU heatsink		Passive CPU heatsink	
	System Cooling	Fanless		Two system fans Fanless	
	Antenna Hole	2 x Antenna hole		2 x Antenna hole	
Physical and Environmental	Storage Temperature	-20°C ~ 75°C (-4°F ~ 167°F)		-20°C ~ 75°C (-4°F ~ 167°F)	
	Operating Temperature	0°C ~ 40°C (32°F ~ 104°F)		0°C ~ 40°C (32°F ~ 104°F)	
	Operating Humidity	Relative humidity: 5%~90% non-condensing		Relative humidity: 5%~90% non-condensing	
	Dimensions (W x L x H) (mm)	225 x 206 x 44.2		225 x 206 x 44.2	
	Weight	2 KG		2 KG	
OS and Certifications	Certification	CE / FCC / RoHS		CE / FCC / RoHS	
	Operating System	Linux Ubuntu 18.04.04 CentOS 7 / Red Hat / Fedora EPEL Microsoft Windows 10		Linux Ubuntu 18.04.04 CentOS 7 / Red Hat / Fedora EPEL Microsoft Windows 10	
Indicators	LCM	N/A		N/A	
	LED	1 x Power LED, 1 x Storage LED, 1 x Alert LED		1 x Power LED, 1 x Storage LED, 1 x Alert LED	

PUZZLE Series Selection Guide



		PUZZLE-IN004				
		PUZZLE-IN004-XD1	PUZZLE-IN004-XD2	PUZZLE-IN004-XD3	PUZZLE-IN004-XD4	PUZZLE-IN004-XD5
Platform	Form Factor	1U				
	CPU	Intel® Xeon® D-2145NT processor 8-core, 11M cache 1.90 GHz	Intel® Xeon® D-2146NT processor 8-core, 11M cache, 2.30 GHz	Intel® Xeon® D-2166NT processor 12-core,16.5M Cache, 2.00 GHz	Intel® Xeon® D-2177NT Processor 14-core, 19.25M Cache, 1.90 GHz	Intel® Xeon® D-2187NT processor 16-core, 22M cache, 2.00 GHz
	Chipset	Integrated in CPU				
Memory	Memory Technology	DDR4 2133/2400MHz ECC DDR4 RDIMM/LRDIMM				
	Memory Capacity	RDIMM up to 256 GB LRDIMM up to 512 GB				
	Memory Socket	8 x 288-pin DIMM				
Network and Security	Network Acceleration and Security Function	• Intel® AES New Instructions • Intel® QuickAssist Technology (Intel® QAT) • Intel® Virtualization Technology (Intel® VT) • Intel® Trusted Execution Technology (Intel® TXT)				
	TPM	1 x TPM 2.0 pin header				
IPMI	IPMI solution	N/A				
Networking	Ethernet IC	1 GbE NIC: Intel® i211-AT 10 GbE: Intel® X722 integrated in CPU				
	Ethernet Port	8 x 1GbE RJ45 LAN ports 4 x 10 GbE SFP+				
	Bypass	N/A				
	Network Module Slot	1 x PulM module slot				
Expansion Slot	PCIe Slot	1 x PCIe 3.0 x8 (FHHL) slot (double width)				
	PCIe Mini Card Slot	1 x PCIe Mini (PCIe +USB 2.0) with SIM card				
	M.2	1 x M.2 M key 2260/2280 Support PCIe 3.0 x4 nVME				
Storage	Storage	2 x 2.5" SATA HDD/SSD bay support SATA 3.0 (6 Gbps)				
	eMMC	N/A				
	SD Card	N/A				
External I/O	VGA	N/A				
	USB	1 x USB 2.0 1 x USB 3.2 Gen 1				
	Console	1 x RJ45				
Internal I/O	HDMI	N/A				
	USB	N/A				
Power and Mechanical	Power Switch	1 x Power Switch				
	Reset Button	1 x Reset Button				
	Power Input	100 V ~ 240 V				
	Type/Watt	Redundant Power 300W, 90V~264V AC				
	Processor Cooling	1 x Passive CPU Heatsink				
	System Cooling	4 x Cooling Fans with Smart fan				
	Antenna Hole	1 x Antenna hole				
Physical and Environmental	Storage Temperature	-20°C ~ 75°C (-4°F ~ 167°F)				
	Operating Temperature	0°C ~ 40°C (32°F ~ 104°F)				
	Operating Humidity	Relative humidity: 5% ~ 90% non-condensing				
	Dimensions (W x L x H) (mm)	430 x 426 x 44.2				
	Weight	7 KG				
OS and Certifications	Certification	CE / FCC / RoHS				
	Operating System	Linux Ubuntu 18.04.04 CentOS 7 / Red Hat / Fedora EPEL Microsoft Windows 10				
Indicators	LCM	LCM, 2 buttons				
	LED	1 x Power LED, 1 x Storage LED, 1 x Alert LED				

PUZZLE Series Selection Guide





		PUZZLE-A001		PUZZLE-A001A	
		PUZZLE-A001-SO2	PUZZLE-A001-SO3	PUZZLE-A001A-SO2	PUZZLE-A001A-SO3
Platform	Form Factor	1U			
	CPU	AMD EPYC™ Embedded 3201 processor, 8C/8T, up to 3.10 GHz	AMD EPYC™ Embedded 3151 processor, 4C/8T, up to 2.90 GHz	AMD EPYC™ Embedded 3201 processor, 8C/8T, up to 3.10 GHz	AMD EPYC™ Embedded 3151 processor, 4C/8T, up to 2.90 GHz
	Chipset	Integrated in CPU		Integrated in CPU	
Memory	Memory Technology	DDR4 2133/2666 MHz ECC or non-ECC UDIMM/ DIMM		DDR4 2133/2666 MHz ECC or non-ECC UDIMM/ DIMM	
	Memory Capacity	UDIMM Up to 64GB RDIMM Up to 128GB		UDIMM Up to 64GB RDIMM Up to 128GB	
	Memory Socket	4 x 288-pin DIMM		4 x 288-pin DIMM	
Network and Security	Network Acceleration and Security Function	• Secure Processor for Crypto Co-processing • Secure Memory Encryption (SME) • Secure Encrypted Virtualization (SEV) • Integrated crypto acceleration supporting the IPsec protocol		• Secure Processor for Crypto Co-processing • Secure Memory Encryption (SME) • Secure Encrypted Virtualization (SEV) • Integrated crypto acceleration supporting the IPsec protocol	
	TPM	1 x TPM 2.0 pin header		1 x TPM 2.0 pin header	
IPMI	IPMI solution	N/A		N/A	
Networking	Ethernet IC	1 GbE NIC: Broadcom® BCM5720		1 GbE NIC: Broadcom® BCM5720	
	Ethernet Port	8 x 1GbE RJ45 LAN ports 4 x 10GbE SPF+ ports (Integrated in CPU)		8 x 1GbE RJ45 LAN ports	
	Bypass	N/A		N/A	
	Network Module Slot	1 x PulM module slot		1 x PulM module slot	
Expansion Slot	PCIe Slot	2 x PCIe 3.0 x4 (FHHL) slots		2 x PCIe 3.0 x4 (FHHL) slots	
	PCIe Mini Card Slot	1 x PCIe Mini card (PCIe 3.0, USB 2.0)		1 x PCIe Mini card (PCIe 3.0, USB 2.0)	
	M.2	1 x 3042/2260 M.2 B key (SATA / USB 3.2 Gen1) Support SATA SSD and 4G LTE module		1 x 3042/2260 M.2 B key (SATA / USB 3.2 Gen1) Support SATA SSD and 4G LTE module	
Storage	Storage	2 x 2.5" SATA HDD/SSD bay support SATA 3.0 (6 Gbps)		2 x 2.5" SATA HDD/SSD bay support SATA 3.0 (6 Gbps)	
	eMMC	N/A		N/A	
	SD Card	N/A		N/A	
External I/O	VGA	N/A		N/A	
	USB	2 x USB 3.2 Gen 1		2 x USB 3.2 Gen 1	
	Console	1 x RJ45		1 x RJ45	
Internal I/O	HDMI	N/A		N/A	
	USB	1 x USB 3.2 Gen 1 (5Gb/s) 4 x USB 2.0		1 x USB 3.2 Gen 1 (5Gb/s) 4 x USB 2.0	
Power and Mechanical	Power Switch	1 x Power Switch		1 x Power Switch	
	Reset Button	1 x Reset Button		1 x Reset Button	
	Power Input	100 V ~ 240 V		100 V ~ 240 V	
	Type/Watt	Redundant Power 300W, 90V~264V AC		Redundant Power 300W, 90V~264V AC	
	Processor Cooling	1 x Passive CPU Heatsink		1 x Passive CPU Heatsink	
	System Cooling	4 x Cooling Fans with Smart fan		4 x Cooling Fans with Smart fan	
	Antenna Hole	1 x Antenna hole		1 x Antenna hole	
Physical and Environmental	Storage Temperature	-20°C ~ 75°C (-4°F ~ 167°F)		-20°C ~ 75°C (-4°F ~ 167°F)	
	Operating Temperature	0°C ~ 40°C (32°F ~ 104°F)		0°C ~ 40°C (32°F ~ 104°F)	
	Operating Humidity	Relative humidity: 5% ~ 90% non-condensing		Relative humidity: 5% ~ 90% non-condensing	
	Dimensions (W x L x H) (mm)	430 x 426 x 44.2		430 x 426 x 44.2	
	Weight	7 KG		7 KG	
OS and Certifications	Certification	CE / FCC / RoHS		CE / FCC / RoHS	
	Operating System	CentOS 7 / Red Hat / Fedora EPEL		CentOS 7 / Red Hat / Fedora EPEL	
Indicators	LCM	LCM, 2 buttons		LCM, 2 buttons	
	LED	1 x Power LED, 1 x Storage LED, 1 x Alert LED		1 x Power LED, 1 x Storage LED, 1 x Alert LED	

PUZZLE Series Selection Guide





		PUZZLE-A002	PUZZLE-M801
		PUZZLE-A002-MF1	PUZZLE-M801-A1
Platform	Form Factor	1U	
	CPU	AMD R-Series RX-421ND processor, 4C, up to 3.4 GHz	Marvell® ARMADA® 88F8040 High-Performance CPU System on Chip, 4C, 1.6GHz
	Chipset	Integrated in CPU	Integrated in CPU
Memory	Memory Technology	DDR4 2400MHz ECC/Non-ECC UDIMM	DDR4 2400MHz ECC/Non-ECC/RDIMM
	Memory Capacity	Up to 32GB	Up to 16 GB
	Memory Socket	2 x 288-pin DIMM	1 x 288-pin DIMM
Network and Security	Network Acceleration and Security Function	• AES-NI encryption acceleration • AMD Secure Processor • Secure boot with AMD Hardware Validated Boot (HVB)	• Configurable packet processor • HW offload for networking • Acceleration engines for storage, networking and security • Public Key Processor (RSA/DH/ECC) • Secure Storage • Secure boot
	TPM	1 x TPM 2.0 pin header	N/A
IPMI	IPMI solution	N/A	N/A
Networking	Ethernet IC	1 GbE NIC: Broadcom® BCM5720	10 GbE PHY: SoC Marvell 88F8040 1 GbE PHY: Marvell 88E1512P
	Ethernet Port	6 x 1GbE RJ45 LAN ports	4 x 1GbE RJ45 LAN ports 2 x 10 GbE SFP+
	Bypass	N/A	N/A
	Network Module Slot	N/A	N/A
Expansion Slot	PCIe Slot	2 x PCIe 3.0 x4 (FHHL) slots	1 x PCIe x16 (FHHL) slot PCIe 3.0 x2 signal
	PCIe Mini Card Slot	1 x PCIe Mini card (PCIe 2.0, USB 2.0, Micro SIM slot)	N/A
	M.2	1 x 2230 M.2 A key (PCIe 2.0 / USB 2.0)	1 x M.2 B Key (3042/2260) (SATA 3.0 and USB 3.2 Gen 1) Support SATA SSD or 4G LTE module (USB signal)
Storage	Storage	2 x 2.5" SATA HDD/SSD bay support SATA 3.0 (6 Gbps)	1 x 2.5" SATA HDD/SSD bay support SATA 3.0 (6 Gbps)
	eMMC	8 GB	32GB
	SD Card	N/A	N/A
External I/O	VGA	N/A	N/A
	USB	2 x USB 3.2 Gen 1	2 x USB 3.2 Gen 1
	Console	1 x RJ45	1 x RJ45
Internal I/O	HDMI	N/A	N/A
	USB	1 x USB USB 3.2 Gen 1 (5Gb/s) 2 x USB 2.0	1 x USB 2.0
Power and Mechanical	Power Switch	1 x Power Switch	1 x Power Switch
	Reset Button	1 x Reset Button	1 x Reset Button
	Power Input	100 V ~ 240 V	100 V ~ 240 V
	Type/Watt	ATX Power 250W, 90V~264V AC	ATX Power 250W, 90V~264V AC
	Processor Cooling	1 x Passive CPU Heatsink	1 x Active CPU Heatsink with fan
	System Cooling	4 x Cooling Fans with Smart fan	2 x Cooling Fans with Smart Fan
	Antenna Hole	1 x Antenna hole	1 x Antenna hole
Physical and Environmental	Storage Temperature	-20°C ~ 75°C (-4°F ~ 167°F)	-20°C ~ 75°C (-4°F ~ 167°F)
	Operating Temperature	0°C ~ 40°C (32°F ~ 104°F)	0°C ~ 40°C (32°F ~ 104°F)
	Operating Humidity	Relative humidity: 5% ~ 90% non-condensing	Relative humidity: 5% ~ 90% non-condensing
	Dimensions (W x L x H) (mm)	430 x 320 x 44.2	430 x 320 x 44.2
	Weight	5 KG	5 KG
OS and Certifications	Certification	CE / FCC / RoHS	CE / FCC / RoHS
	Operating System	CentOS 7 / Red Hat / Fedora EPEL	Linux Ubuntu 16.04.04
Indicators	LCM	LCM, 2 buttons	N/A
	LED	1 x Power LED, 1 x Storage LED, 1 x Alert LED	1 x Power LED, 1 x Storage LED, 1 x Alert LED

PUZZLE-IN005

2U Rackmount Network Appliance support dual Intel® ice-lake CPU



Features

- Dual Intel® Ice lake Xeon® Scalable processors (up to 185W)
- 20 x DDR4 R-DIMM / LR-DIMM memory
- 8 network module with PCIe gen4 x8 signal
- Intel® Quick-Assist Technology
- 4 x U.2(PCIe x4) 2.5" SSD compatible with SATA
- 1+1 1200W CRPS redundant power supply
- 4+1 hot swappable system fans

Specifications

		PUZZLE-IN005
Platform	Form Factor	2U
	CPU	Intel® Ice-Lake LGA-4189 Xeon® Scalable Processor
	Chipset	C627A
Memory	Memory Technology	DDR4 3200MHz ECC RDIMM / LRDIMM
	Memory Capacity	Memory up to:1280GB (20 x 64GB)
	Memory Socket	20 x 288-pin DIMM
Network and Security	Network Acceleration and Security Function	• Intel® AES New Instructions • Intel® QuickAssist Technology (Intel® QAT) • Intel® Virtualization Technology (Intel® VT) • Intel® Trusted Execution Technology (Intel® TXT)
	TPM	1 x TPM 2.0 Pin header
IPMI	IPMI Sulotion	1 x iRIS-2400 module
Networking	Ethernet IC	1 GbE NIC: Intel® i210-AT with NCSI support 1 GbE NIC: Intel® i219
	Ethernet Port	2 x 1GbE RJ45 ports (1 x IPMI Lan)
	Network Module Slot	8 x Networking Module Slot
Expansion Slot	PCIe Slot	1 x PCIe Gen4 x8 (HHHL) slot (single width)
	PCIe Mini Card Slot	N/A
	M.2	2 x M.2 M key 2280 Support PCIe Gen3 x4 nVMe
Storage	Storage	4 x U.2 SSD drive bay compatible to SATA
	eMMC	N/A
	SD Card	N/A
External I/O	VGA	1 x VGA port
	USB	2 x USB 3.1 Gen 1 (5Gb/s) Type-A ports
	Console	1 x RJ45 1 x USB Type-C
Internal I/O	HDMI	N/A
	USB	1 x USB 2.0 pin header
Power and Mechanical	Power Switch	1 x Power Switch
	Reset Button	1 x Reset Button
	Power Input	100 V ~ 240 V
	Type/Watt	Redundant Power 1200W, 90V~264V AC
	Processor Cooling	2 x Active CPU Cooler
	System Cooling	5 x Cooling Fans with Smart Fan
	Antenna Hole	N/A
Physical and Environmental	Storage Temperature	-20°C ~ 75°C (-4°F ~ 167°F)
	Operating Temperature	0°C ~ 40°C (32°F ~ 104°F)
	Operating Humidity	Relative humidity: 5% ~ 90% non-condensing
	Dimensions (W x L x H) (mm)	438 x 650 x 88 mm
	Weight	23kg
OS and Certifications	Certification	CE / FCC / RoHS
	Operating System	Linux 18.04 (CentOS, Red Hat, Ubuntu, etc.) Windows server 2019
Indicators	LCM	N/A
	LED	1 x Power LED, 1 x Storage LED, 1 x Alert LED

Ordering Information

Part No.	Description
PUZZLE-IN005-R-R10	2U Rackmount Network Appliance support dual Intel® ice-lake-SP CPU, twenty DDR4 R-DIMM/LR-DIMM slots, and two 1GbE (one support BMC control), eight PulM, one PCIe expansion, Redundant Power, without cooler, RoHS

Packing List

1 x USB to RJ45 console cable	Rack mounting ears
2 x Power cord	Screws for rack mounting ears
Flat head screws (for 2.5” HDD)	

Options

Item	Part No.	Description
Slide rail	RAIL-A03-57	Kingslide Rail kit for TS-EC2480U-RP, maximum load 90 kg
USB to console cable	32013-004000-100-RS	Round cable; LAN CABLE; FTDI console cable; 2; 1800MM; (A)USB A TYPE 4P MALE+PCB:FTDI_FT232RL; (B)RJ-45 8P8C; RoHS
CPU cooler	19100-000287-00-RS	Cooler module/Heat Pipe; HEATSINK:113*78*64mm, FAN:60*60*15mm; Standard; 00; TSM-002007-HS3; Aluminum plate+FIN Buckle+Heat Pipe*5; +Grease:TC5888+6025FAN+FAN cover+LGA4189*4; Nidec; H60T12BHA7-57T07; CCL; RoHS

IO Interface

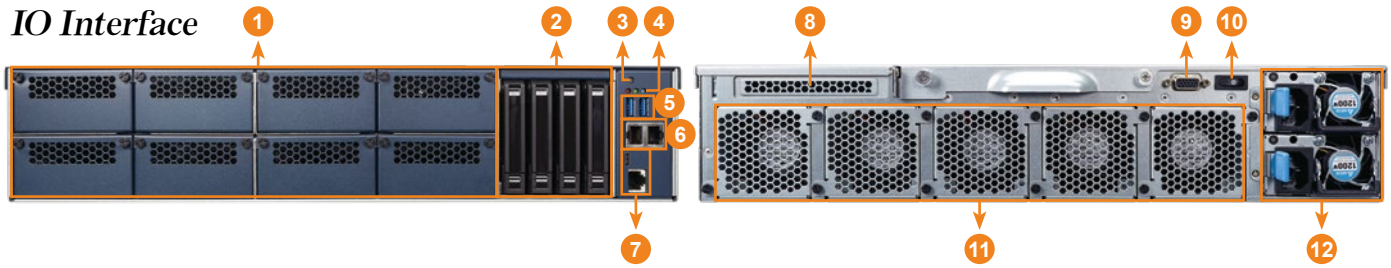

1. 8 x IEI Networking module slot
2. 4 x 2.5” drive bay
3. Reset button
4. Power status
   HDD status
   Alert LED
5. 2 x USB 3.2 Gen1
6. 1 x MGMT LAN
   1 x IPMI LAN
7. Console port
   1 x USB type C
   1 x RJ45
8. PCIe expansion slot
9. VGA port
10. Power switch
11. 5 x hot-swappable fan
12. Power inlet

Dimensions *(Unit: mm)*

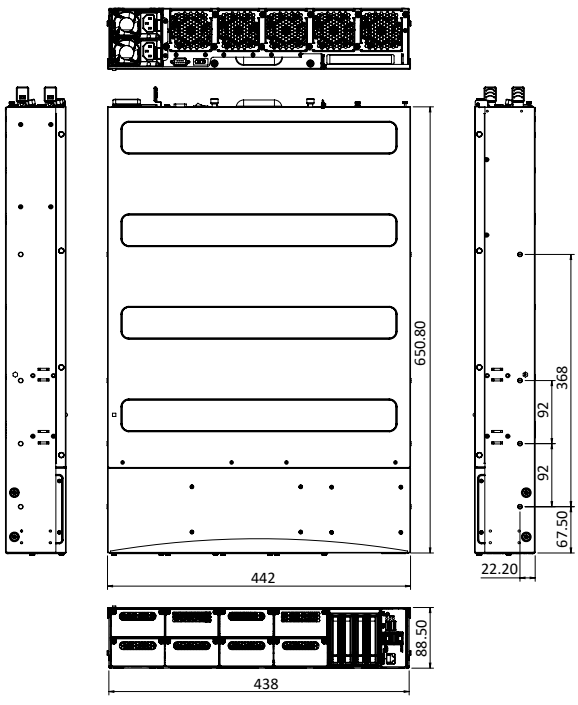

PUZZLE-IN001

1U Rackmount Network Appliance with Intel® Xeon® E and 8th & 9th Generation Intel® Core™ i3/Pentium®/Celeron® Processor, two PulM module slots and two PCIe slots



Features

- Intel® Xeon® E, 8th & 9th Generation Intel® Core™/ Pentium®/Celeron® processor
- 8 x GbE RJ45 via Intel® I211
- 2 x 288-pin DIMM, DDR4 2400MHz ECC & non ECC, up to 32GB
- 1 x RJ45 Console, 2 x USB 3.2 Gen 1 (5Gb/s), LCM
- 2 x 2.5” SATA drive bay, 1 x M.2 B-Key (SATA, USB 3.2 Gen 1 (5Gb/s)), 1 x PCIe Mini
- Support PCIe x4, PCIe x8 slot and two PulM module slots
- Redundant PSUs

Specifications

		PUZZLE-IN001-XE	PUZZLE-IN001-i3T
Platform	Form Factor	1U	
	CPU	Intel® Xeon® E-2136 processor, 6C/12T, up to 4.50 GHz	8th Generation Intel® Core™ i3-8100T processor, 4C/4T, up to 3.10 GHz
	Chipset	Intel® C246	
Memory	Memory Technology	2 x DDR4 2400MHz ECC/Non-ECC/RDIMM	
	Memory Capacity	Up to 32GB	
	Memory Socket	2 x 288-pin DIMM	
Network and Security	Network Acceleration and Security Function	• Intel® AES New Instructions • Intel® Software Guard Extensions (Intel® SGX) • Intel® Memory Protection Extensions (Intel® MPX) • Intel® Trusted Execution Technology	
	TPM	1 x TPM 2.0 pin header	
Networking	Ethernet IC	1 GbE NIC: Intel® I211-AT	
	Ethernet Port	8 x 1GbE RJ45 LAN ports	
	Network Module Slot	2 x PulM module slots	
Expansion Slot	PCIe Slot	1 x PCIe 3.0 x8 (FHHL) slot, 1 x PCIe 3.0 x4 (FHHL) slots	
	PCIe Mini Card Slot	1 x PCIe Mini card (PCIe 3.0 & SATA 3.0, USB 2.0)	
	M.2	1 x 3042/2260 M.2 B key (SATA 3.0 / USB 3.2 Gen1) Support SATA SSD and 4G LTE module	
Storage	Storage	2 x 2.5" SATA HDD/SSD bay support SATA 3.0 (6 Gbps) (RAID 0/1 support)	
	eMMC	N/A	
	SD Card	N/A	
External I/O	USB	2 x USB 3.2 Gen 1 (5Gb/s)	
	Console	1 x RJ45	
Internal I/O	HDMI	N/A	1 x HDMI connecter (optional)
	USB	4 x USB 2.0 (pin header)	
Power and Mechanical	Power Switch	1 x Power switch	
	Reset Button	1 x Reset button	
	Power Input	100 V ~ 240 V	
	Type/Watt	Redundant power 300W	
		90V ~ 264V AC	
	Processor Cooling	1 x Passive CPU heatsink	
	System Cooling	4 x Cooling fans with smart fan	
	Antenna Hole	1 x Antenna hole	
Physical and Environmental	Storage Temperature	-20°C ~ 75°C (-4°F ~ 167°F)	
	Operating Temperature	0°C ~ 40°C (32°F ~ 104°F)	
	Operating Humidity	5% ~ 90% non-condensing	
	Dimensions (W x L x H) (mm)	430 x 426 x 44.2	
	Weight	7kg	
OS and Certifications	Certification	CE / FCC / RoHS	
	Operating System	Linux Ubuntu 18.04.04 CentOS 7 / Red Hat / Fedora EPEL Microsoft Windows 10	
Indicators	LCM	LCM, 2 buttons	
	LED	1 x Power LED, 1 x Storage LED, 1 x Alert LED	

Ordering Information

Part No.	Description
PUZZLE-IN001-R-R11*	1U Rackmount Network Appliance support Intel® Gen8 Xeon®E3, Core™ i3, Pentium® or Celeron® processor, two DDR4 slots, two SSD slots and eight 1GbE, two PulM, two PCIe expansion without heatsink, Redundant Power, RoHS
PUZZLE-IN001-XE/R-R11	1U Rackmount Network Appliance with Intel® Gen8 Xeon® E-2136 processor, two DDR4 slots, and eight 1GbE, two PulM module slots, two PCIe expansion, Redundant Power, RoHS
PUZZLE-IN001-i3T/R-R11	1U Rackmount Network Appliance with Intel® Gen8 Core™ i3-8100T processor, two DDR4 slots, and eight 1GbE, two PulM module slots, two PCIe expansion, Redundant Power, RoHS
PUZZLE-IN001-XE/16G/R-R11	1U Rackmount Network Appliance with Intel® Gen8 Xeon® E-2136 processor, two 8GB DDR4, two 256GB SSD, and eight 1GbE, two PulM module slots, two PCIe expansion, Redundant Power, RoHS
PUZZLE-IN001-i3T/16G/R-R11	1U Rackmount Network Appliance with Intel® Gen8 Core™ i3-8100T processor, two 8GB DDR4, two 256GB SSD, and eight 1GbE, two PulM module slots, two PCIe expansion, Redundant Power, RoHS

* A CPU heatsink must be purchased separately

Packing List

	PUZZLE-IN001-R	PUZZLE-IN001-XE/R	PUZZLE-IN001-i3T/R	PUZZLE-IN001-XE/16G/R	PUZZLE-IN001-i3T/16G/R
Power cord	2	2	2	2	2
Rack mounting ears	2	2	2	2	2
Screws for rack mounting ears	6	6	6	6	6
USB to console cable	Option	Option	Option	1	1
RS-232 to console cable	1	1	1	Option	Option
Slide rail	Option	Option	Option	Option	Option

Options

Item	Part No.	Description
Slide rail	RAIL-B02	New rail kit for new 1U & 2U NAS: TVS-471U, 1253U, etc
USB to console cable	32013-004000-100-RS	Round cable; LAN CABLE; FTDI console cable; 2; 1800MM; (A)USB A TYPE 4P MALE+PCB:FTDI_FT232RL; (B)RJ45 8P8C; RoHS
RS-232 to console cable	32005-005100-100-RS	Round cable; RS-232/422/485; PUZZLE RS-232 cable; 2; 500MM; 24AWG; (A)D-SUB 9P MALE+#4-40 Screw; (B)RJ45 PLUG 8P8C; ONE PCS PKG; TC&C; RoHS
HDMI cable	19B00-000403-00-RS	Z532; Accessory module; PUZZLE series HDMI cable assembly (only processor support graphics model); standard; 00, RoHS
Heatsink (TDP: 35W)	34000-000731-RS	HEATSINK; 90*90*27MM, GREASE:35*35mm_K=6.5; Washer*4+SPING SCREW Set*4, for CPU TDP 35W; RoHS
Heatsink (TDP: 80W)	34000-000722-RS	HEATSINK/Heat Pipe; FIN:89.5X88.4X20MM+Ø6 Heat Pipe*1, Copper Block:40*36*3MM + Aluminum Block:90*90*4.0MM; SCREW+SPRING+E-RING+WASHER*4, GREASE:X23-7762for CPU TDP 80W; RoHS

IO Interface

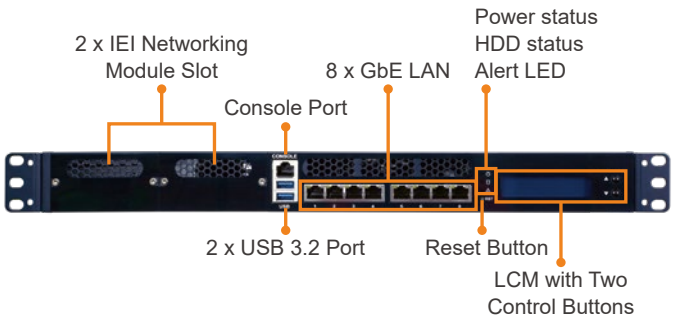

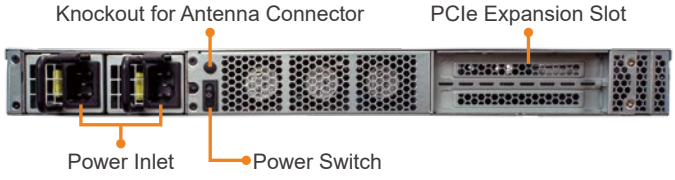

Dimensions (Unit: mm)

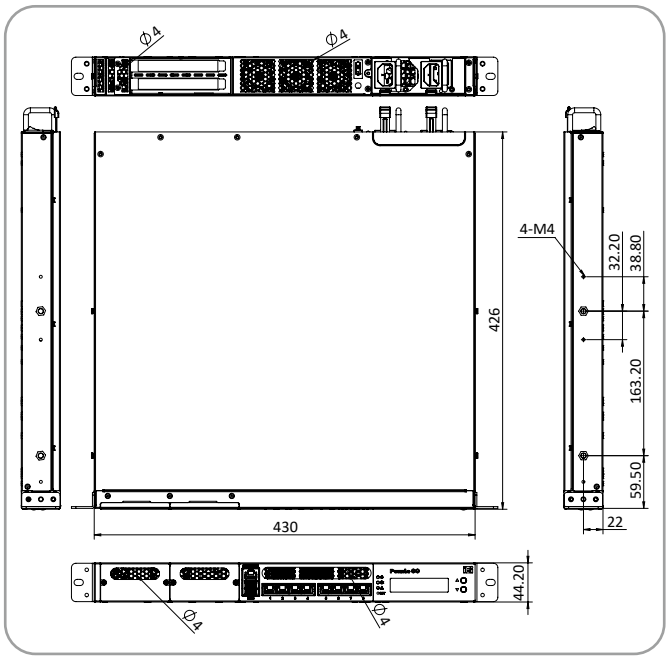

PUZZLE-IN001A

1U Rackmount Network Appliance with Intel® Xeon® E and 8th & 9th Generation Intel® Core™ i3/Pentium®/Celeron® Processor, two PulM module slots and two PCIe slots



Features

- Intel® Xeon® E, 8th & 9th Generation Intel® Core™/ Pentium®/Celeron® processor
- 8 x 5 GbE RJ45 via AQC 111C, support 100 meters over Cat 5e or better at 5 Gbps, 2.5 Gbps, 1 Gbps, 100 Mbps (require no change to existing infrastructure or cabling)
- 4 x 288-pin DIMM, DDR4 2400MHz ECC & non ECC, up to 64 GB
- 1 x RJ45 Console, 2 x USB 3.2 Gen 1, LCM
- 2 x 2.5” SATA drive bay, 1 x M.2 B-Key, 1 x PCIe Mini

Specifications

		PUZZLE-IN001A-XE	PUZZLE-IN001A-i3T
Platform	Form Factor	1U	
	CPU	Intel® Xeon® E-2136 processor, 6C/12T, up to 4.50 GHz	8th Generation Intel® Core™ i3-8100T processor, 4C/4T, up to 3.10 GHz
	Chipset	Intel® C246	
Memory	Memory Technology	4 x DDR4 2400MHz ECC/Non-ECC UDIMM	
	Memory Capacity	Up to 64GB	
	Memory Socket	4 x 288-pin DIMM	
Network and Security	Network Acceleration and Security Function	• Intel® AES New Instructions • Intel® Software Guard Extensions (Intel® SGX) • Intel® Memory Protection Extensions (Intel® MPX) • Intel® Trusted Execution Technology	
	TPM	1 x TPM 2.0 pin header	
Networking	Ethernet IC	8 x 5GbE NIC: AQC 111C	
	Ethernet Port	8 x 5 GbE RJ45 LAN ports	
	Network Module Slot	2 x PulM module slots	
Expansion Slot	PCIe Slot	1 x PCIe 3.0 x8 (FHHL) slot, 1 x PCIe 3.0 x4 (FHHL) slots	
	PCIe Mini Card Slot	1 x PCIe Mini card (PCIe 3.0 & SATA 3.0, USB 2.0)	
	M.2	1 x 3042/2260 M.2 B key (SATA 3.0 / USB 3.2 Gen1) Support SATA SSD and 4G LTE module	
Storage	Storage	2 x 2.5" SATA HDD/SSD bay support SATA 3.0 (6 Gbps)	
	eMMC	N/A	
	SD Card	N/A	
External I/O	USB	2 x USB 3.2 Gen 1 (5Gb/s)	
	Console	1 x RJ45	
Internal I/O	HDMI	N/A	1 x HDMI connecter (optional)
	USB	4 x USB 2.0 (pin header)	
Power and Mechanical	Power Switch	1 x Power switch	
	Reset Button	1 x Reset button	
	Power Input	100 V ~ 240 V	
	Type/Watt	Redundant power 300W	
		90V ~ 264V AC	
	Processor Cooling	1 x Passive CPU heatsink	
	System Cooling	4 x Cooling fans with smart fan	
	Antenna Hole	1 x Antenna hole	
Physical and Environmental	Storage Temperature	-20°C ~ 75°C (-4°F ~ 167°F)	
	Operating Temperature	0°C ~ 40°C (32°F ~ 104°F)	
	Operating Humidity	5% ~ 90% non-condensing	
	Dimensions (W x L x H) (mm)	430 x 426 x 44.2	
	Weight	7kg	
OS and Certifications	Certification	CE / FCC / RoHS	
	Operating System	Linux Ubuntu 18.04.04 CentOS 7 / Red Hat / Fedora EPEL Microsoft Windows 10	
Indicators	LCM	LCM, 2 buttons	
	LED	1 x Power LED, 1 x Storage LED, 1 x Alert LED	

Ordering Information

Part No.	Description
PUZZLE-IN001A-i3T/16G/R-R10	1U Rackmount Network Appliance with Intel® Gen 8 Core™ i3-8100T processor, two 8GB DDR4, two 256GB SSD, eight 5GbE, two PulM, two PCIe expansion, Redundant Power, RoHS
PUZZLE-IN001A-XE/16G/R-R10	1U Rackmount Network Appliance with Intel® Gen 8 Xeon® E-2136 processor, two 8GB DDR4, two 256GB SSD, eight 5GbE, two PulM, two PCIe expansion, Redundant Power, RoHS

Packing List

	PUZZLE-IN001A-XE/16G/R	PUZZLE-IN001A-i3T/16G/R
Power cord	2	2
Rack mounting ears	2	2
Screws for rack mounting ears	6	6
USB to console cable	1	1
RS-232 to console cable	Option	Option
Slide rail	Option	Option

Options

Item	Part No.	Description
Slide rail	RAIL-B02	New rail kit for new 1U & 2U NAS: TVS-471U, 1253U, etc
USB to console cable	32013-004000-100-RS	ROUND CABLE; LAN CABLE; FTDI Console Cable; 2; 1800MM; (A)USB A TYPE 4P MALE+PCB:FTDI_FT232RL; (B)RJ45 8P8C; RoHS
RS-232 to console cable	32005-005100-100-RS	ROUND CABLE; RS-232/422/485; PUZZLE RS-232 Cable; 2; 500MM; 24AWG; (A)D-SUB 9P MALE+#4-40 Screw; (B)RJ45 PLUG 8P8C; ONE PCS PKG; TC&C; RoHS

IO Interface

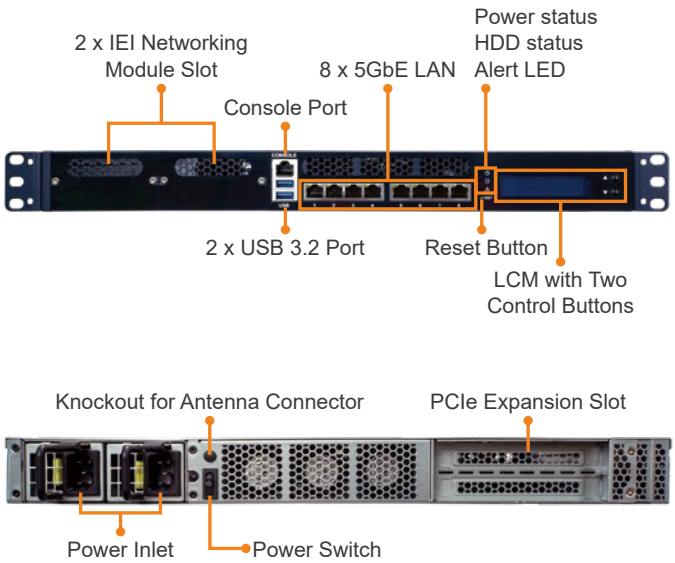

Dimensions (Unit: mm)

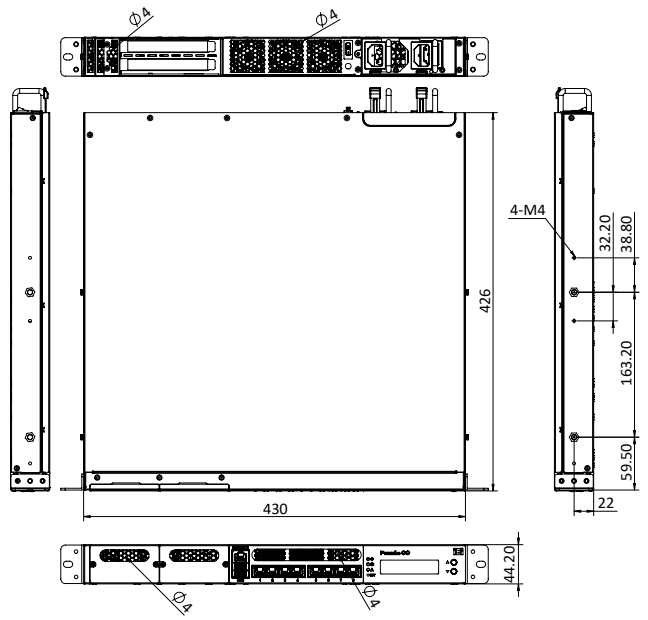

PUZZLE-IN002

1U Rackmount Network Appliance with 8th & 9th Generation Intel® Core™ i7/i5/i3, Pentium® or Celeron® Processor, 1 PCIe slots



Features

- 8th & 9th Generation Intel® Core™ i7/i5/i3, Pentium® or Celeron® processor
- 6 x GbE RJ45 via Intel® I211
- 2 x DDR4 2400MHz Non-ECC UDIMM, up to 32GB
- 1 x RJ45 Console, 2 x USB 3.2 Gen 1 (5Gb/s), LCM
- 2 x 2.5" SATA drive bay, 1 x M.2 A key (PCIe & USB 2.0), 1 x PCIe Mini card (SATA, USB 2.0) with SIM slot
- Support PCIe x16

Specifications

		PUZZLE-IN002-i3T	PUZZLE-IN002-PGT
Platform	Form Factor	1U	
	CPU	8th Generation Intel® Core™ i3-8100T processor, 4C/4T, up to 3.10 GHz	Intel® Pentium® Gold G5400T processor, 2C/4T, up to 3.10 GHz
	Chipset	Intel® H310	
Memory	Memory Technology	2 x DDR4 2400MHz Non-ECC UDIMM	
	Memory Capacity	Up to 32GB	
	Memory Socket	2 x 288-pin DIMM	
Network and Security	Network Acceleration and Security Function	• Intel® AES New Instructions • Intel® Software Guard Extensions (Intel® SGX) • Intel® Memory Protection Extensions (Intel® MPX) • Intel® Trusted Execution Technology	
	TPM	1 x TPM 2.0 pin header	
Networking	Ethernet IC	1 GbE NIC: Intel® I211-AT	
	Ethernet Port	6 x 1GbE RJ45 LAN ports	
	Network Module Slot	N/A	
Expansion Slot	PCIe Slot	1 x PCIe 3.0 x16 (FHHL) slot (double width)	
	PCIe Mini Card Slot	1 x PCIe Mini card (SATA 3.0, USB 2.0) with SIM slot	
	M.2	1 x M.2 A key (PCIe 2.0& USB 2.0)	
Storage	Storage	2 x 2.5" SATA HDD/SSD bay support SATA 3.0 (6 Gbps)	
	eMMC	N/A	
	SD Card	N/A	
External I/O	USB	2 x USB 3.2 Gen 1 (5Gb/s)	
	Console	1 x RJ45	
Internal I/O	HDMI	1 x HDMI connecter (optional)	
	USB	2 x USB 2.0 (pin header)	
Power and Mechanical	Power Switch	1 x Power switch	
	Reset Button	1 x Reset button	
	Power Input	100 V ~ 240 V	
	Type/Watt	ATX power 250W	
		90V~264V AC	
	Processor Cooling	1 x Passive CPU heatsink	
	System Cooling	4 x Cooling fans with smart fan	
	Antenna Hole	1 x Antenna hole	
Physical and Environmental	Storage Temperature	-20°C ~ 75°C (-4°F ~ 167°F)	
	Operating Temperature	0°C ~ 40°C (32°F ~ 104°F)	
	Operating Humidity	5% ~ 90% non-condensing	
	Dimensions (W x L x H) (mm)	430 x 320 x 44.2	
	Weight	5kg	
OS and Certifications	Certification	CE / FCC / RoHS	
	Operating System	Linux Ubuntu 18.04.04 CentOS 7 / Red Hat / Fedora EPEL Microsoft Windows 10	
Indicators	LCM	LCM, 2 buttons	
	LED	1 x Power LED, 1 x Storage LED, 1 x Alert LED	

Ordering Information

Part No.	Description
PUZZLE-IN002-R11*	1U Rackmount Network Appliance support Intel® Gen 8 Core™ i7, i5, i3, Pentium® or Celeron® processor, two DDR4 slots, and six 1GbE, one PCIe x16 expansion, RoHS
PUZZLE-IN002-i3T-R11	1U Rackmount Network Appliance with Intel® Gen8 Core™ i3-8100T processor, two DDR4 slots, and six 1GbE, one PCIe x16 expansion, RoHS
PUZZLE-IN002-PGT-R11	1U Rackmount Network Appliance with Intel® Gen8 Pentium® Gold G5400T processor, two DDR4 slots, and six 1GbE, one PCIe x16 expansion, RoHS
PUZZLE-IN002-i3T/8G-R11	1U Rackmount Network Appliance with Intel® Gen8 Core™ i3-8100T processor, two 4GB DDR4, one 256GB SSD, six 1GbE, one PCIe x16 expansion, RoHS
PUZZLE-IN002-PGT/8G-R11	1U Rackmount Network Appliance with Intel® Gen8 Pentium® Gold G5400T processor, two 4GB DDR4, one 256GB SSD, and six 1GbE, one PCIe x16 expansion, RoHS

* A CPU heatsink must be purchased separately

Packing List

	PUZZLE-IN002	PUZZLE-IN002-i3T	PUZZLE-IN002-PGT	PUZZLE-IN002-i3T/8G	PUZZLE-IN002-PGT/8G
Power cord	1	1	1	1	1
Rack mounting ears	2	2	2	2	2
Screws for rack mounting ears	6	6	6	6	6
USB to console cable	Option	Option	Option	1	1
RS-232 to console cable	1	1	1	Option	Option
Slide rail	Option	Option	Option	Option	Option

Options

Item	Part No.	Description
USB to console cable	32013-004000-100-RS	ROUND CABLE; LAN CABLE; FTDI Console Cable; 2; 1800MM; (A)USB A TYPE 4P MALE+PCB:FTDI_FT232RL; (B)RJ45 8P8C; RoHS
RS-232 to console cable	32005-005100-100-RS	ROUND CABLE; RS-232/422/485; PUZZLE RS-232 Cable; 2; 500MM; 24AWG; (A)D-SUB 9P MALE+#4-40 Screw; (B)RJ45 PLUG 8P8C; ONE PCS PKG; TC&C; RoHS
HDMI cable	19B00-000403-00-RS	Z532; Accessory module; PUZZLE series HDMI cable assembly (only processor support graphics model); standard; 00, RoHS
Heatsink (TDP: 35W)	34000-000731-RS	HEATSINK; 90*90*27MM, GREASE:35*35mm_K=6.5; Washer*4+SPING SCREW Set*4, for CPU TDP 35W; RoHS
Heatsink (TDP: 80W)	34000-000722-RS	HEATSINK/Heat Pipe; FIN:89.5X88.4X20MM+Ø6 Heat Pipe*1, Copper Block:40*36*3MM + Aluminum Block:90*90*4.0MM; SCREW+SPRING+E-RING+WASHER*4, GREASE:X23-7762for CPU TDP 80W; RoHS

IO Interface

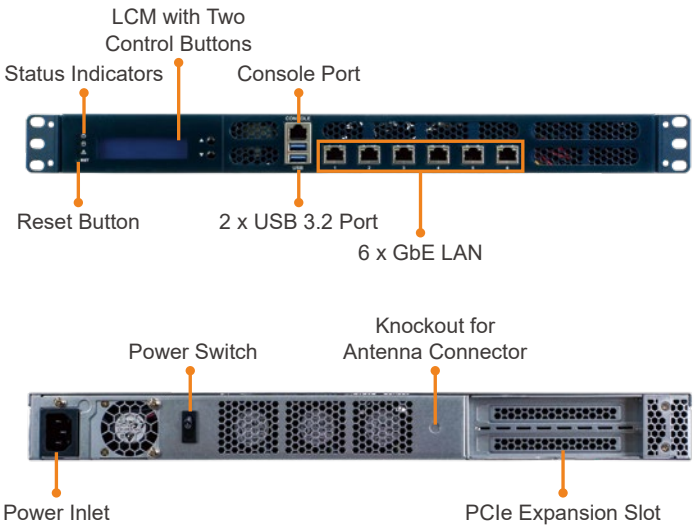

Dimensions (Unit: mm)

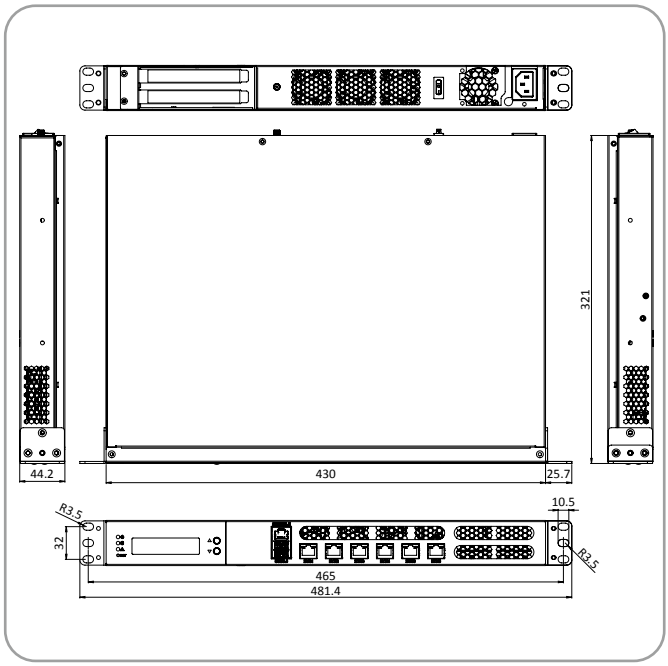

PUZZLE-IN003A

Desktop Network Appliance with Intel® Atom® Processor C3000 Processor, up to 8 x 1 GbE on Board with 2 (by sku) bypass segments, 1 x eMMC 32GB



Features

- Intel® Atom® processor C3558 8M Cache, up to 2.20 GHz
- Support 4 x 1 GbE NIC via Intel® I211, 4 x 1 GbE PHY via Marvell 88E1543
- Support bypass function (by sku)
- DDR4 2133MHz ECC (by CPU) or non-ECC UDIMM/R-DIMM Up to 128GB
- 1 x M.2 A key (USB 2.0, PCIe x1), 1 x miniPCIe (USB 2.0, PCIe x1) with SIM card slot, 1 x eMMC 32GB

Specifications

		PUZZLE-IN003A-C1	PUZZLE-IN003A-C3
Platform	Form Factor	Desktop	
	CPU	Intel® Atom® processor C3558 8M cache, up to 2.20 GHz	Intel® Atom® Processor C3336 4M Cache, 1.50 GHz
	Chipset	Integrated in CPU	
Memory	Memory Technology	DDR4 2133MHz ECC (By CPU) or non-ECC UDIMM, Support DDR4 RDIMM	
	Memory Capacity	UDIMM up to 64GB / RDIMM up to 128GB	
	Memory Socket	2 x 288-pin DIMM	1 x 288-pin DIMM
Network and Security	Network Acceleration and Security Function	• Intel® AES New Instructions • Intel® Software Guard Extensions (Intel® SGX) • Intel® Virtualization Technology for Directed I/O (VT-d) • Intel® QuickAssist Technology (Intel® QAT)	• Intel® Virtualization Technology for Directed I/O (VT-d) • Intel® Virtualization Technology (VT-x) • Intel® QuickAssist Technology (Intel® QAT)
	TPM	1 x TPM 2.0 pin header	
Networking	Ethernet IC	1 GbE NIC: Intel® i211-AT 1 GbE PHY: Marvell 88E1543	
	Ethernet Port	4 x GbE from Intel® i211-AT 4 x GbE from Marvell 88E1543	4 x GbE from Intel® i211-AT 2 x GbE from Marvell 88E1543
	Bypass	Yes, 2 bypass segments	Yes, 1 bypass segments
	Network Module Slot	N/A	
Expansion Slot	PCIe Slot	N/A	
	PCIe Mini Card Slot	1 x PCIe Mini card (PCIe 3.0, USB 2.0) with SIM slot	
	M.2	1 x M.2 A key (PCIe 3.0 & USB 2.0)	
Storage	Storage	1 x SATA 3.0 + 1 x 5V power connector (for SATA DOM) 1 x M.2 M key 2260/2280 Support PCIe 3.0 x4 nVME	
	eMMC	1 x eMMC 32GB	
	SD Card	N/A	
External I/O	USB	1 x USB 2.0 1 x USB 3.2 Gen 1	
	Console	1 x RJ45	
Internal I/O	HDMI	N/A	
	USB	N/A	
Power and Mechanical	Power Switch	1 x Power switch	
	Reset Button	1 x Reset button	
	Power Input	1 x DC jack	
	Type/Watt	12 V DC-in, 60W	
	Processor Cooling	Passive CPU heatsink	
	System Cooling	Fanless	
	Antenna Hole	2 x Antenna hole	
Physical and Environmental	Storage Temperature	-20°C ~ 75°C (-4°F ~ 167°F)	
	Operating Temperature	0°C ~ 40°C (32°F ~ 104°F)	
	Operating Humidity	5% ~ 90% non-condensing	
	Dimensions (W x L x H) (mm)	225 x 206 x 44.2	
	Weight	2 kg	
OS and Certifications	Certification	CE / FCC / RoHS	
	Operating System	Linux Ubuntu 18.04.04 CentOS 7 / Red Hat / Fedora EPEL Microsoft Windows 10	
Indicators	LCM	N/A	
	LED	1 x Power LED, 1 x Storage LED, 1 x Alert LED	

Ordering Information

Part No.	Description
PUZZLE-IN003A-C1-R10	Desktop network appliance with Intel® ATOM® C3558 processor, 8 x 1GbE on Board with up to 2 bypass segments, eMMC 32GB & 2 x M.2 slot, RoHS
PUZZLE-IN003A-C1/8G-R10	Desktop network appliance with Intel® ATOM® C3558 processor, 8 x 1GbE on Board with up to 2 bypass segments, 8GB DDR4, eMMC 32GB & 2 x M.2 slot, RoHS
PUZZLE-IN003A-C3-R10	Desktop network appliance with Intel® ATOM® C3336 processor, 6 x 1GbE on Board with up to 1 bypass segments, eMMC 32GB & 2 x M.2 slot, RoHS
PUZZLE-IN003A-C3/8G-R10	Desktop network appliance with Intel® ATOM® C3336 processor, 6 x 1GbE on Board with up to 1 bypass segments, 8GB DDR4, eMMC 32GB & 2 x M.2 slot, RoHS

Packing List

	PUZZLE-IN003A-C1-R10	PUZZLE-IN003A-C1/8G-R10	PUZZLE-IN003A-C3-R10	PUZZLE-IN003A-C3/8G-R10
Power cord	1	1	1	1
Power adapter	1	1	1	1
Rack mounting ears	Option	2	Option	2
Screws for rack mounting ears	Option	6	Option	6
USB to console cable	Option	1	option	1
RS-232 to console cable	1	Option	1	Option

Options

Item	Part No.	Description
USB to console cable	32013-004000-100-RS	Round cable, LAN cable, FTDI console cable, 2, 1800MM, (A) USB A TYPE 4P MALE+PCB:FTDI_FT232RL, (B) RJ45 8P8C, RoHS
RS-232 to console cable	32005-005100-100-RS	Round cable, RS-232/422/485, PUZZLE RS-232 cable, 2, 500MM, 24AWG, (A) D-SUB 9P MALE+#4-40 screw, (B) RJ45 PLUG 8P8C, ONE PCS PKG, TC&C, RoHS
Rack ear mounting kit	19B00-000417-00-RS	Accessory module: PUZZLE-IN003 series rack ear mounting kit

IO Interface

PUZZLE-IN003A-C1



Power LED
Storage LED
Alert LED

8 x GbE sku

PUZZLE-IN003A-C3



Power LED
Storage LED
Alert LED

6 x GbE sku

Rear view



CONSOLE
USB 2.0
USB 3.0

Reset DC/IN Power

Dimensions (Unit: mm)

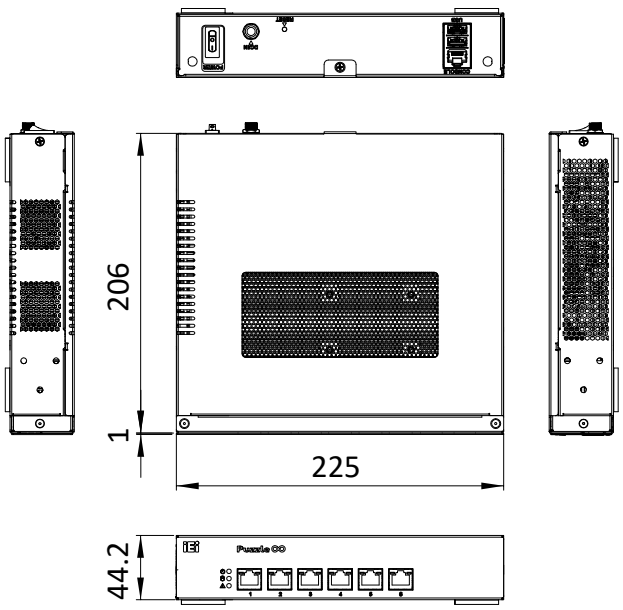

PUZZLE-IN003B

Desktop Network Appliance with Intel® Atom® Processor C3000 Processor support up to 6 x 1 GbE, 2 x 10 GbE & 2 x M.2 slots, 1 x PCIe Mini, 1 x eMMC 32GB



Features

- Intel® Atom® processor C3558 8M Cache, up to 2.20 GHz
- Support 4 x 1 GbE NIC via Intel® C3558, 2 x 1 GbE PHY via Marvell 88E1512, 2 x 10 GbE SFP+ via intel C3558
- DDR4 2133MHz ECC (by CPU) or non-ECC UDIMM/R-DIMM Up to 128GB
- 1 x M.2 A key (USB 2.0, PCIe x1), 1 x miniPCIe (USB 2.0, PCIe x1) with SIM card slot, 1 x eMMC 32GB

Specifications

		PUZZLE-IN003B-C0	PUZZLE-IN003B-C1
Platform	Form Factor	Desktop	
	CPU	Intel® Atom® processor C3758 16M cache, up to 2.20 GHz	Intel® Atom® processor C3558 8M cache, up to 2.20 GHz
	Chipset	Integrated in CPU	
Memory	Memory Technology	DDR4 2133MHz ECC (By CPU) or non-ECC UDIMM, Support DDR4 RDIMM	
	Memory Capacity	UDIMM up to 64GB / RDIMM up to 128GB	
	Memory Socket	4 x 288-pin DIMM	
Network and Security	Network Acceleration and Security Function	• Intel® AES New Instructions • Intel® Software Guard Extensions (Intel® SGX) • Intel® Memory Protection Extensions (Intel® MPX) • Intel® Virtualization Technology for Directed I/O (VT-d) • Intel® QuickAssist Technology (Intel® QAT)	• Intel® AES New Instructions • Intel® Software Guard Extensions (Intel® SGX) • Intel® Virtualization Technology for Directed I/O (VT-d) • Intel® QuickAssist Technology (Intel® QAT)
	TPM	1 x TPM 2.0 pin header	
Networking	Ethernet IC	1 GbE NIC: Intel® i211-AT 1 GbE PHY: Marvell 88E1512 10 GbE: Intel® X553 integrated in CPU	
	Ethernet Port	4 x 1GbE from Intel® i211-AT 2 x 1GbE from Marvell 88E1512 2 x 10 GbE SFP+	
	Network Module Slot	N/A	
Expansion Slot	PCIe Slot	N/A	
	PCIe Mini Card Slot	1 x PCIe Mini card (PCIe 3.0, USB 2.0) with SIM slot	
	M.2	1 x M.2 A key (PCIe 3.0& USB 2.0)	
Storage	Storage	1 x SATA 3.0 + 1 x 5V power connector (for SATA DOM) 1 x M.2 M key 2260/2280 Support PCIe 3.0 x4 nVME	
	eMMC	1 x eMMC 32GB	
	SD Card	N/A	
External I/O	USB	1 x USB 2.0 1 x USB 3.2 Gen 1	
	Console	1 x RJ45	
Internal I/O	HDMI	N/A	
	USB	N/A	
Power and Mechanical	Power Switch	1 x Power switch	
	Reset Button	1 x Reset button	
	Power Input	1 x DC jack	
	Type/Watt	12 V DC-in, 60W	
	Processor Cooling	Passive CPU heatsink	
	System Cooling	Two system fans	Fanless
	Antenna Hole	2 x Antenna hole	
Physical and Environmental	Storage Temperature	-20°C ~ 75°C (-4°F ~ 167°F)	
	Operating Temperature	0°C ~ 40°C (32°F ~ 104°F)	
	Operating Humidity	5% ~ 90% non-condensing	
	Dimensions (W x L x H) (mm)	225 x 206 x 44.2	
	Weight	2 kg	
OS and Certifications	Certification	CE / FCC / RoHS	
	Operating System	Linux Ubuntu 18.04.04 CentOS 7 / Red Hat / Fedora EPEL Microsoft Windows 10	
Indicators	LCM	N/A	
	LED	1 x Power LED, 1 x Storage LED, 1 x Alert LED	

Ordering Information

Part No.	Description
PUZZLE-IN003B-C0-R10	Desktop network appliance with Intel® ATOM® C3758 processor, 4 x DDR4 slots, 6 x 1GbE, 2 x 10 GbE & 2 x M.2 slots, 1 x PCIe Mini slot, 1 x eMMC 32GB, RoHS
PUZZLE-IN003B-C0/8G-R10	Desktop network appliance with Intel® ATOM® C3758 processor, one 8GB DDR4, 6 x 1GbE, 2 x 10 GbE & 2 x M.2 slots, 1 x PCIe Mini slot, 1 x eMMC 32GB, RoHS
PUZZLE-IN003B-C1-R10	Desktop network appliance with Intel® ATOM® C3558 processor, 4 x DDR4 slots, 6 x 1GbE, 2 x 10 GbE & 2 x M.2 slots, 1 x PCIe Mini slot, 1 x eMMC 32GB, RoHS
PUZZLE-IN003B-C1/8G-R10	Desktop network appliance with Intel® ATOM® C3558 processor, one 8GB DDR4, 6 x 1GbE, 2 x 10 GbE & 2 x M.2 slots, 1 x PCIe Mini slot, 1 x eMMC 32GB, RoHS

Packing List

	PUZZLE-IN003B-C0-R10	PUZZLE-IN003B-C0/8G-R10	PUZZLE-IN003B-C1-R10	PUZZLE-IN003B-C1/8G-R10
Power cord	1	1	1	1
Power adapter	1	1	1	1
Rack mounting ears	Option	2	Option	2
Screws for rack mounting ears	Option	6	Option	6
USB to console cable	Option	1	Option	1
RS-232 to console cable	1	Option	1	Option

Options

Item	Part No.	Description
USB to console cable	32013-004000-100-RS	Round cable, LAN cable, FTDI console cable, 2, 1800MM, (A) USB A TYPE 4P MALE+PCB:FTDI_FT232RL, (B) RJ45 8P8C, RoHS
RS-232 to console cable	32005-005100-100-RS	Round cable, RS-232/422/485, PUZZLE RS-232 cable, 2, 500MM, 24AWG, (A) D-SUB 9P MALE+#4-40 screw, (B) RJ45 PLUG 8P8C, ONE PCS PKG, TC&C, RoHS
Rack ear mounting kit	19B00-000417-00-RS	Accessory module: PUZZLE-IN003 series rack ear mounting kit

IO Interface



Rear view

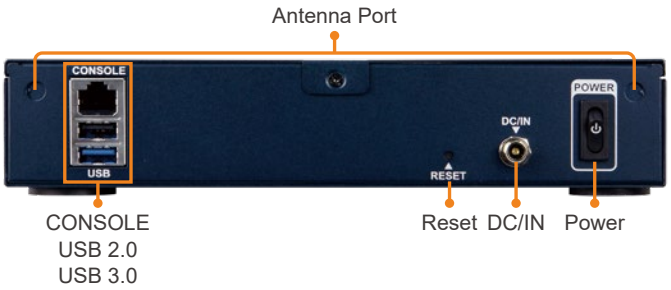

Dimensions (Unit: mm)

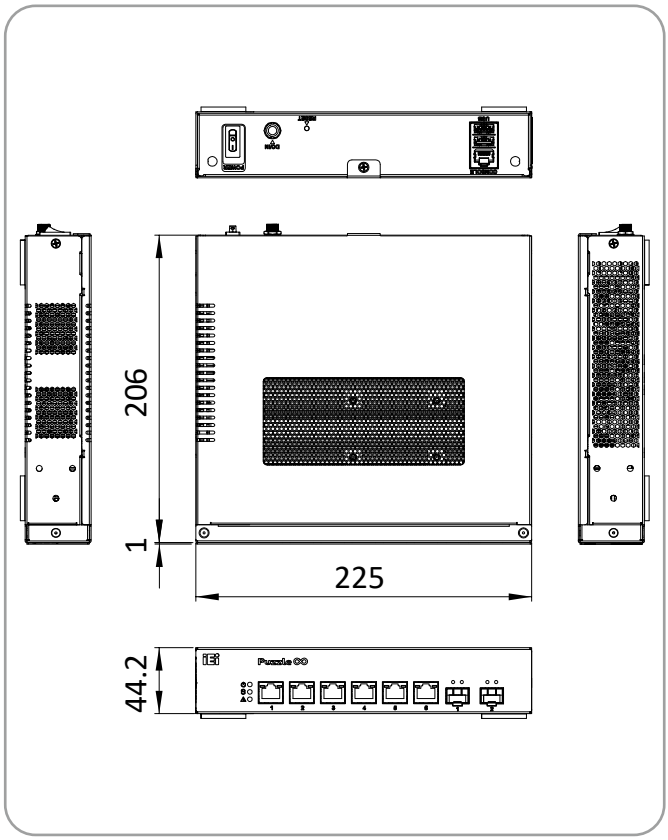

PUZZLE-IN004

1U Rackmount Network Appliance with Intel® Xeon® D Processor support 8 x GbE, 4 x 10GbE SFP+ and 1 PCIe x8 slot



Features

- Intel® Xeon D-2100 series processor (Skylake-D) with optional Intel® QAT
- Support eight GbE RJ45 via Intel® I211-AT, four 10 GbE SFP+ and IEI networking module
- 8 x 288-pin RDIMM, 2 x DDR4 2666MHz, RDIMM up to 256GB / LRDIMM up to 512GB
- 1 x RJ45 Console, 1 x USB 3.2 Gen 1 (5Gb/s), 1 x USB 2.0, LCM
- 2 x 2.5" SATA drive bay, 2 x M.2 M key 2280 (PCIe x4),1 x PCIe Mini (PCIe + USB 2.0) with SIM card
- Support one PCIe x8 slot, one PuIM module slot
- Redundant PSUs

Specifications

		PUZZLE-IN004-XD1	PUZZLE-IN004-XD2	PUZZLE-IN004-XD3	PUZZLE-IN004-XD4	PUZZLE-IN004-XD5
Platform	Form Factor	1U				
	CPU	Intel® Xeon® D-2145NT processor 8C16T, 1.90 GHz	Intel® Xeon® D-2146NT processor 8C16T, 2.30 GHz	Intel® Xeon® D-2166NT processor 12C24T, 2.00 GHz	Intel® Xeon® D-2177NT processor 14C28T, 1.90 GHz	Intel® Xeon® D-2187NT processor 16C32T, 2.00 GHz
	Chipset	Integrated in CPU				
Memory	Memory Technology	DDR4 2133/2400MHz ECC DDR4 RDIMM/LRDIMM				
	Memory Capacity	RDIMM up to 256GB / LRDIMM up to 512GB				
	Memory Socket	8 x 288-pin DIMM				
Network and Security	Network Acceleration and Security Function	• Intel® AES New Instructions • Intel® Software Guard Extensions (Intel® SGX) • Intel® Memory Protection Extensions (Intel® MPX) • Intel® Trusted Execution Technology				
	TPM	1 x TPM 2.0 pin header				
Networking	Ethernet IC	1 GbE NIC: Intel® i211-AT 10 GbE: Intel® X722 integrated in CPU				
	Ethernet Port	4 x 10 GbE SFP+ / 8 x 1GbE RJ45 LAN ports				
	Network Module Slot	1 x PuIM module slot				
Expansion Slot	PCIe Slot	1 x PCIe 3.0 x8 (FHHL) slot (double width)				
	PCIe Mini Card Slot	1 x PCIe Mini (PCIe + USB 2.0) with SIM card				
	M.2	1 x M.2 M key 2260/2280 Support PCIe 3.0 x4 nVME				
Storage	Storage	2 x 2.5" SATA HDD/SSD bay support SATA 3.0 (6 Gbps)				
	eMMC	N/A				
	SD Card	N/A				
External I/O	USB	1 x USB 2.0 / 1 x USB 3.2 Gen 1				
	Console	1 x RJ45				
Internal I/O	HDMI	N/A				
	USB	N/A				
Power and Mechanical	Power Switch	1 x Power switch				
	Reset Button	1 x Reset button				
	Power Input	100 V ~ 240 V				
	Type/Watt	Redundant power 300W, 90V~264V AC				
	Processor Cooling	1 x Passive CPU heatsink				
	System Cooling	3 x Cooling fans with smart fan				
	Antenna Hole	1 x Antenna hole				
Physical and Environmental	Storage Temperature	-20°C ~ 75°C (-4°F ~ 167°F)				
	Operating Temperature	0°C~ 40°C (32°F ~ 104°F)				
	Operating Humidity	5% ~ 90% non-condensing				
	Dimensions (W x L x H) (mm)	430 x 426 x 44.2				
	Weight	7 kg				
OS and Certifications	Certification	CE / FCC / RoHS				
	Operating System	Linux Ubuntu 18.04.04 CentOS 7 / Red Hat / Fedora EPEL Microsoft Windows 10				
Indicators	LCM	LCM, 2 buttons				
	LED	Power status, Storage status, Alert LED				

Ordering Information

Part No.	Description
PUZZLE-IN004-XD1/R-R10	1U rackmount network appliance with Intel® Xeon® D-2145NT processor, eight 1GbE, four 10 GbE, one PulM module slot and one PCIe expansion, RoHS
PUZZLE-IN004-XD1/32G/R-R10	1U rackmount network appliancee with Intel® Xeon® D-2145NT processor, four 8GB DDR4, two 240GB SSD, eight 1GbE, four 10 GbE, one PulM module slot and one PCIe expansion, RoHS
PUZZLE-IN004-XD2/R-R10	1U rackmount network appliance with Intel® Xeon® Intel Xeon D-2146NT processor, eight 1GbE, four 10 GbE, one PulM module slot and one PCIe expansion, RoHS
PUZZLE-IN004-XD2/32G/R-R10	1U rackmount network appliance with Intel® Xeon® D-2146NT processor, four 8GB DDR4, two 240GB SSD, eight 1GbE, four 10 GbE, one PulM module slot and one PCIe expansion, RoHS
PUZZLE-IN004-XD3/R-R10	1U rackmount network appliancee with Intel® Xeon® D-2166NT processor, eight 1GbE, four 10 GbE, one PulM module slot and one PCIe expansion, RoHS
PUZZLE-IN004-XD3/32G/R-R10	1U rackmount network appliance with Intel® Xeon® D-2166NT processor, four 8GB DDR4, two 240GB SSD, eight 1GbE, four 10 GbE, one PulM module slot and one PCIe expansion, RoHS
PUZZLE-IN004-XD4/R-R10	1U rackmount network appliance with Intel® Xeon® D-2177NT processor, eight 1GbE, four 10 GbE, one PulM module slot and one PCIe expansion, RoHS
PUZZLE-IN004-XD4/64G/R-R10	1U rackmount network appliance with Intel® Xeon® D-2177NT processor, four 16GB DDR4, two 480GB SSD, eight 1GbE, four 10 GbE, one PulM module slot and one PCIe expansion, RoHS
PUZZLE-IN004-XD5/R-R10**	1U rackmount network appliance with Intel® Xeon® D-2187NT processor, eight 1GbE, four 10 GbE, one PulM module slot and one PCIe expansion, RoHS
PUZZLE-IN004-XD5/64G/R-R10**	1U rackmount network appliance with Intel® Xeon® D-2187NT processor, four 16GB DDR4, two 480GB SSD, eight 1GbE, four 10 GbE, one PulM module slot and one PCIe expansion, RoHS

** By order production

Packing List

	PUZZLE-IN004									
	XD1/R	XD2/R	XD3/R	XD4/R	XD5/R	XD1/32G/R	XD2/32G/R	XD3/32G/R	XD4/64G/R	XD5/64G/R
Power cord	2	2	2	2	2	2	2	2	2	2
Rack mounting ears	2	2	2	2	2	2	2	2	2	2
Screws for rack mounting ears	6	6	6	6	6	6	6	6	6	6
USB to console cable	option	option	option	option	option	1	1	1	1	1
RS-232 to console cable	1	1	1	1	1	option	option	option	option	option
Slide rail	option	option	option	option	option	option	option	option	option	option

Options

Item	Part No.	Description
Slide rail	RAIL-B02	New rail kit for new 1U & 2U NAS: TVS-471U, 1253U, etc
USB to console cable	32013-004000-100-RS	ROUND CABLE; LAN CABLE; FTDI Console Cable; 2; 1800MM; (A)USB A TYPE 4P MALE+PCB:FTDI_FT232RL; (B)RJ45 8P8C; RoHS
RS-232 to console cable	32005-005100-100-RS	ROUND CABLE; RS-232/422/485; PUZZLE RS-232 Cable; 2; 500MM; 24AWG; (A) D-SUB 9P MALE+#4-40 Screw; (B)RJ45 PLUG 8P8C; ONE PCS PKG; TC&C; RoHS

IO Interface

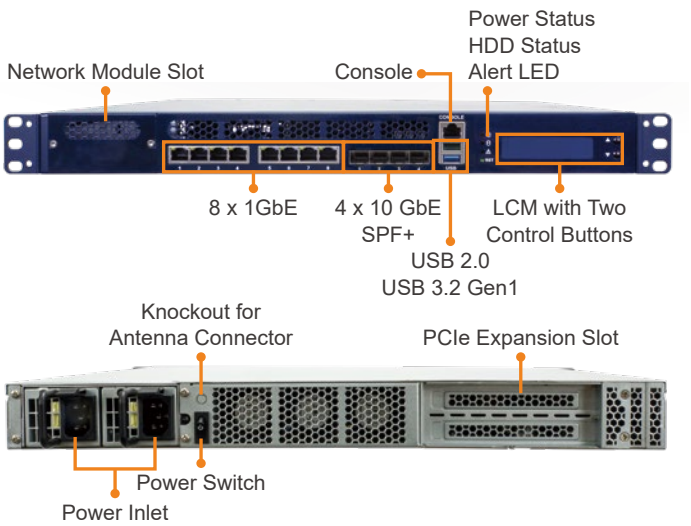

Dimensions (Unit: mm)

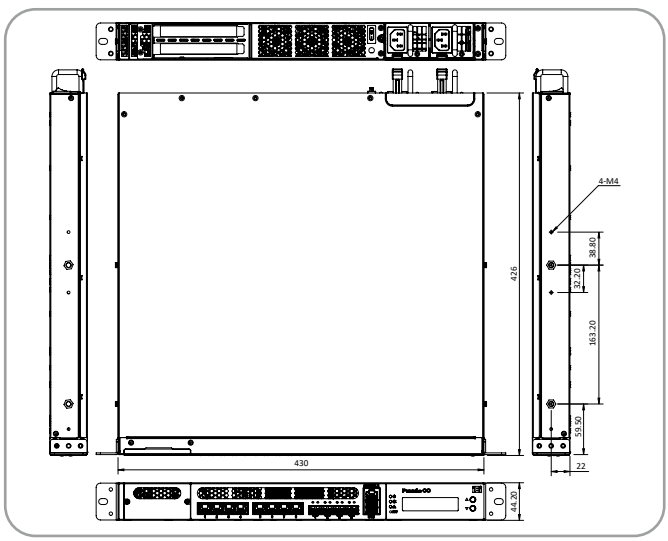

PUZZLE-A001

1U Rackmount Network Appliance with AMD EPYC™ Embedded 3000 series processor, one PuIM module slot & 2 PCIe x4 slots



Features

- AMD EPYC™ Embedded 3000 series processor, high-performance System-on-Chip
- Support 8 x GbE RJ45 via BCM 5720, 4 x 10 GbE SFP+
- 4 x 288-pin DDR4 2666 MHz, UDIMM up to 64GB / RDIMM up to 128GB
- 1 x RJ45 Console, 2 x USB 3.2 Gen 1 (5Gb/s), LCM
- 2 x 2.5” SATA 3.0 drive bay, 1 x M.2 B-Key (SATA 3.0, USB 3.2 Gen 1 (5Gb/s)), 1 x PCIe Mini card (PCIe 3.0, USB 2.0)
- Support two PCIe x4 slots, one PuIM module slot
- Redundant PSUs

Specifications

		PUZZLE-A001-SO2	PUZZLE-A001-SO3
Platform	Form Factor	1U	
	CPU	AMD EPYC™ Embedded 3201 processor, 8C/8T, up to 3.10 GHz	AMD EPYC™ Embedded 3151 processor, 4C/8T, up to 2.90 GHz
	Chipset	Integrated in CPU	
Memory	Memory Technology	4 x DDR4 2133/2666 MHz ECC or non-ECC UDIMM/ RDIMM	
	Memory Capacity	UDIMM Up to 64GB / RDIMM Up to 128GB	
	Memory Socket	4 x 288-pin DIMM	
Network and Security	Network Acceleration and Security Function	• Secure Processor for Crypto Co-processing • Secure Memory Encryption (SME) • Secure Encrypted Virtualization (SEV) • Integrated crypto acceleration supporting the IPsec protocol	
	TPM	1 x TPM 2.0 pin header	
Networking	Ethernet IC	1 GbE NIC: Broadcom® BCM5720	
	Ethernet Port	8 x 1GbE RJ45 LAN ports, 4 x 10GbE SPF+ ports (Integrated in CPU)	
	Network Module Slot	1 x PuIM module slot	
Expansion Slot	PCIe Slot	2 x PCIe 3.0 x4 (FHHL) slots	
	PCIe Mini Card Slot	1 x PCIe Mini card (PCIe 3.0, USB 2.0)	
	M.2	1 x 2260/3042 B key (SATA and USB 3.2 Gen 1 (5Gb/s)) Support SATA SSD and 4G LTE module	
Storage	Storage	2 x 2.5" SATA HDD/SSD bay support SATA 3.0 (6 Gbps)	
	eMMC	N/A	
	SD Card	N/A	
External I/O	USB	2 x USB 3.2 Gen 1 (5Gb/s)	
	Console	1 x RJ45	
Internal I/O	HDMI	N/A	
	USB	1 x USB 3.2 Gen 1 (5Gb/s) 4 x USB 2.0	
Power and Mechanical	Power Switch	1 x Power switch	
	Reset Button	1 x Reset button	
	Power Input	100 V ~ 240 V	
	Type/Watt	Redundant power 300W	
		90V ~ 264V AC	
	Processor Cooling	1 x Passive CPU heatsink	
	System Cooling	4 x Cooling fans with smart fan	
	Antenna Hole	1 x Antenna hole	
Physical and Environmental	Storage Temperature	-20°C ~ 75°C (-4°F ~ 167°F)	
	Operating Temperature	0°C ~ 40°C (32°F ~ 104°F)	
	Operating Humidity	5% ~ 90% non-condensing	
	Dimensions (W x L x H) (mm)	430 x 426 x 44.2	
	Weight	7kg	
OS and Certifications	Certification	CE / FCC / RoHS	
	Operating System	Linux Ubuntu 18.04.04 CentOS 7 / Red Hat / Fedora EPEL	
Indicators	LCM	LCM, 2 buttons	
	LED	1 x Power LED, 1 x Storage LED, 1 x Alert LED	

Ordering Information

Part No.	Description
PUZZLE-A001-SO2/16G/R-R10	1U Rackmount Network Appliance with AMD EPYC™ Embedded 3201 processor, two 8GB DDR4, two 256GB SSD, four 10 GbE SFP+, eight 1GbE, one PuIM module slot, two PCIe expansion, Redundant Power, RoHS
PUZZLE-A001-SO3/16G/R-R10	1U Rackmount Network Appliance with AMD EPYC™ Embedded 3151 processor, two 8GB DDR4, two 256GB SSD, four 10 GbE SFP+, eight 1GbE, one PuIM module slot, two PCIe expansion, Redundant Power, RoHS

Packing List

	PUZZLE-A001-SO2/16G/R	PUZZLE-A001-SO3/16G/R
Power cord	2	2
Rack mounting ears	2	2
Screws for rack mounting ears	6	6
USB to console cable	1	1
RS-232 to console cable	Option	Option
Slide rail	Option	Option

Options

Item	Part No.	Description
Slide rail	RAIL-B02	New rail kit for new 1U & 2U NAS: TVS-471U, 1253U, etc
USB to console cable	32013-004000-100-RS	ROUND CABLE; LAN CABLE; FTDI Console Cable; 2; 1800MM; (A)USB A TYPE 4P MALE+PCB:FTDI_FT232RL; (B)RJ45 8P8C; RoHS
RS-232 to console cable	32005-005100-100-RS	ROUND CABLE; RS-232/422/485; PUZZLE RS-232 Cable; 2; 500MM; 24AWG; (A) D-SUB 9P MALE+#4-40 Screw; (B)RJ45 PLUG 8P8C; ONE PCS PKG; TC&C; RoHS

IO Interface

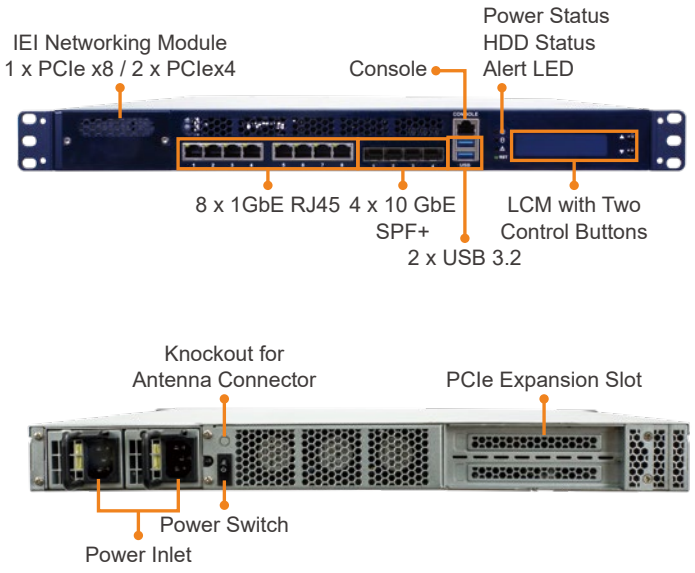

Dimensions (Unit: mm)

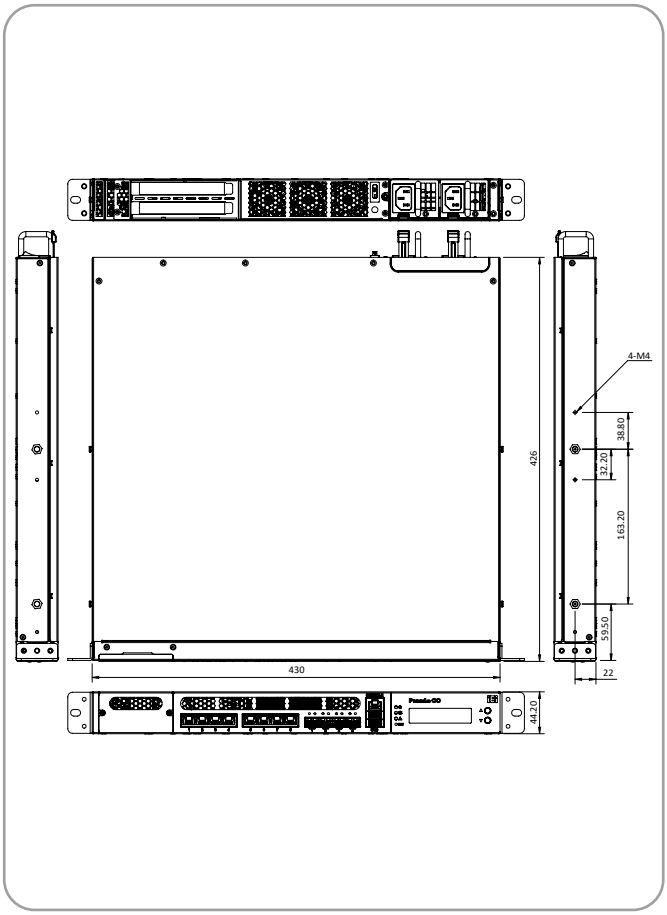

PUZZLE-A001A

1U Rackmount Network Appliance with AMD EPYC™ Embedded 3000 series processor, one PulM module slot & 2 PCIe x4 slots



Features

- AMD EPYC™ Embedded 3000 series processor, highperformance System-on-Chip
- Support 8 x GbE RJ45 via BCM 5720
- 4 x 288-pin DDR4 2666 MHz, UDIMM up to 64GB / RDIMM up to 128GB
- 1 x RJ45 Console, 2 x USB 3.2 Gen 1 (5Gb/s), LCM
- 2 x 2.5” SATA 3.0 drive bay, 1 x M.2 B-Key (SATA 3.0, USB 3.2 Gen 1 (5Gb/s)), 1 x PCIe Mini card (PCIe 3.0, USB 2.0)
- Support two PCIe x4 slots, one PulM module slot
- Redundant PSUs

Specifications

		PUZZLE-A001A-SO2	PUZZLE-A001A-SO3
Platform	Form Factor	1U	
	CPU	AMD EPYC™ Embedded 3201 processor, 8C/8T, up to 3.10 GHz	AMD EPYC™ Embedded 3151 processor, 4C/8T, up to 2.90 GHz
	Chipset	Integrated in CPU	
Memory	Memory Technology	4 x DDR4 2133/2666 MHz ECC or non-ECC UDIMM/RDIMM	
	Memory Capacity	UDIMM Up to 64GB / RDIMM Up to 128GB	
	Memory Socket	4 x 288-pin DIMM	
Network and Security	Network Acceleration and Security Function	• Secure Processor for Crypto Co-processing • Secure Memory Encryption (SME) • Secure Encrypted Virtualization (SEV) • Integrated crypto acceleration supporting the IPsec protocol	
	TPM	1 x TPM 2.0 pin header	
Networking	Ethernet IC	1 GbE NIC: Broadcom® BCM5720	
	Ethernet Port	8 x GbE RJ45 LAN ports	
	Network Module Slot	1 x PulM module slot	
Expansion Slot	PCIe Slot	2 x PCIe 3.0 x4 (FHHL) slots	
	PCIe Mini Card Slot	1 x PCIe Mini card (PCIe 3.0, USB 2.0)	
	M.2	1 x 2260/3042 B key (SATA and USB 3.2 Gen 1 (5Gb/s)) Support SATA SSD and 4G LTE module	
Storage	Storage	2 x 2.5" SATA HDD/SSD bay support SATA 3.0 (6 Gbps)	
	eMMC	N/A	
	SD Card	N/A	
External I/O	USB	2 x USB 3.2 Gen 1 (5Gb/s)	
	Console	1 x RJ45	
Internal I/O	HDMI	N/A	
	USB	1 x USB 3.2 Gen 1 (5Gb/s) 4 x USB 2.0	
Power and Mechanical	Power Switch	1 x Power switch	
	Reset Button	1 x Reset button	
	Power Input	100 V ~ 240 V	
	Type/Watt	Redundant power 300W	
		90V ~ 264V AC	
	Processor Cooling	1 x Passive CPU heatsink	
	System Cooling	4 x Cooling fans with smart fan	
	Antenna Hole	1 x Antenna hole	
Physical and Environmental	Storage Temperature	-20°C ~ 75°C (-4°F ~ 167°F)	
	Operating Temperature	0°C ~ 40°C (32°F ~ 104°F)	
	Operating Humidity	5% ~ 90% non-condensing	
	Dimensions (W x L x H) (mm)	430 x 426 x 44.2	
	Weight	7kg	
OS and Certifications	Certification	CE / FCC / RoHS	
	Operating System	Linux Ubuntu 18.04.04 CentOS 7 / Red Hat / Fedora EPEL	
Indicators	LCM	LCM, 2 buttons	
	LED	1 x Power LED, 1 x Storage LED, 1 x Alert LED	

Ordering Information

Part No.	Description
PUZZLE-A001A-SO2/R-R10	1U Rackmount Network Appliance with AMD EPYC™ Embedded 3201 processor, four DDR4 slots, and eight 1GbE , one PuIM slot, two PCIe expansion, Redundant Power, RoHS
PUZZLE-A001A-SO3/R-R10	1U Rackmount Network Appliance with AMD EPYC™ Embedded 3151 processor, four DDR4 slots, and eight 1GbE , one PuIM slot, two PCIe expansion, Redundant Power, RoHS

Packing List

	PUZZLE-A001A-SO2/R-R10	PUZZLE-A001A-SO3/R-R10
Power cord	2	2
Rack mounting ears	2	2
Screws for rack mounting ears	6	6
USB to console cable	Option	Option
RS-232 to console cable	1	1
Slide rail	Option	Option

Options

Item	Part No.	Description
Slide rail	RAIL-B02	New rail kit for new 1U & 2U NAS: TVS-471U, 1253U, etc
USB to console cable	32013-004000-100-RS	ROUND CABLE; LAN CABLE; FTDI Console Cable; 2; 1800MM; (A)USB A TYPE 4P MALE+PCB:FTDI_FT232RL; (B)RJ45 8P8C; RoHS
RS-232 to console cable	32005-005100-100-RS	ROUND CABLE; RS-232/422/485; PUZZLE RS-232 Cable; 2; 500MM; 24AWG; (A) D-SUB 9P MALE+#4-40 Screw; (B)RJ45 PLUG 8P8C; ONE PCS PKG; TC&C; RoHS

IO Interface

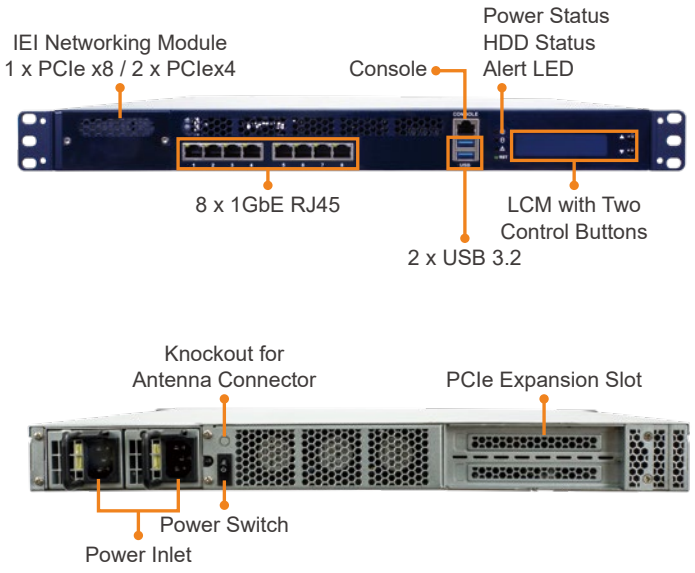

Dimensions (Unit: mm)

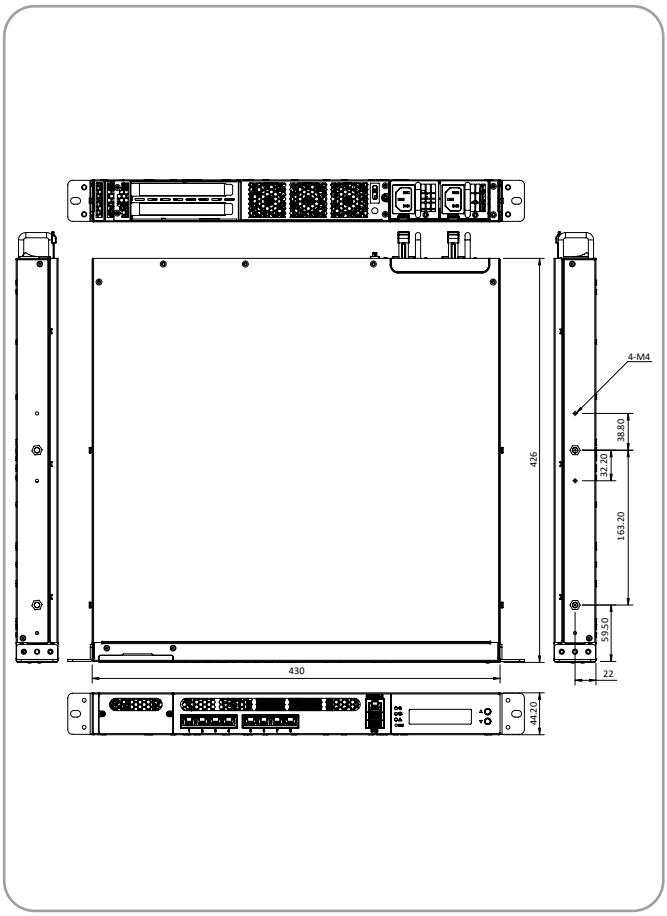

PUZZLE-A002

1U Rackmount Network Appliance with AMD R-Series RX-421ND Processor, Support Six GbE RJ45



Features

- AMD R-Series RX-421ND quad-core 2.1 GHz processor
- 2 x DDR4 2400MHz ECC/Non-ECC UDIMM, up to 32 GB
- Support six GbE RJ45 via BROADCOM BCM 5720
- 1 x RJ45 Console, 2 x USB 3.2 Gen 1 (5Gb/s), 2 x USB 2.0, LCM
- 2 x 2.5” SATA 3.0 drive bay, 1 x PCIe Mini card (PCIe 2.0, USB 2.0, Micro SIM slot)
- Support two PCIe x4

Specifications

		PUZZLE-A002
Platform	Form Factor	1U
	CPU	AMD R-Series RX-421ND processor, 4C, up to 3.4 GHz
	Chipset	Integrated in CPU
Memory	Memory Technology	2 x DDR4 2400MHz ECC/Non-ECC UDIMM
	Memory Capacity	Up to 32GB
	Memory Socket	2 x 288-pin DIMM
Network and Security	Network acceleration and Security function	• AES-NI encryption acceleration • AMD Secure Processor • Secure boot with AMD Hardware Validated Boot (HVB)
	TPM	1 x TPM 2.0 pin header
Networking	Ethernet IC	1 GbE NIC: Broadcom® BCM5720
	Ethernet Port	6 x 1GbE RJ45 LAN ports
	Network Module Slot	N/A
Expansion Slot	PCIe Slot	2 x PCIe 3.0 x4 (FHHL) slots
	PCIe Mini Card Slot	1 x PCIe Mini card (PCIe 2.0, USB 2.0, Micro SIM slot)
	M.2	1 x 2230 M.2 A key (PCIe 2.0/ USB 2.0)
Storage	Storage	2 x 2.5" SATA HDD/SSD bay support SATA 3.0 (6 Gbps)
	eMMC	8 GB
	SD Card	N/A
External I/O	USB	2 x USB 3.2 Gen 1 (5Gb/s)
	Console	1 x RJ45
Internal I/O	HDMI	N/A
	USB	1 x USB 3.2 Gen 1 (5Gb/s) 2 x USB 2.0
Power and Mechanical	Power Switch	1 x Power switch
	Reset Button	1 x Reset button
	Power Input	100 V ~ 240 V
	Type/Watt	ATX power 250W
		90V~264V AC
	Processor Cooling	1 x Passive CPU heatsink
	System Cooling	4 x Cooling fans with smart fan
	Antenna Hole	1 x Antenna hole
Physical and Environmental	Storage Temperature	-20°C ~ 75°C (-4°F ~ 167°F)
	Operating Temperature	0°C ~ 40°C (32°F ~ 104°F)
	Operating Humidity	5% ~ 90% non-condensing
	Dimensions (W x L x H) (mm)	430 x 320 x 44.2
	Weight	5kg
OS and Certifications	Certification	CE / FCC / RoHS
	Operating System	Linux Ubuntu 18.04.04 CentOS 7 / Red Hat / Fedora EPEL
Indicators	LCM	LCM, 2 buttons
	LED	1 x Power LED, 1 x Storage LED, 1 x Alert LED

Ordering Information

Part No.	Description
PUZZLE-A002-MF1-R10	1U Rackmount Network Appliance with AMD® RX-421ND processor, two DDR4 slots, and six 1GbE, two PCIe x4 expansion, RoHS
PUZZLE-A002-MF1/8G-R10	1U Rackmount Network Appliance with AMD® RX-421ND processor, one 8GB DDR4, one 256GB SSD, six 1GbE, two PCIe x4 expansion, RoHS

Packing List

	PUZZLE-A002-MF1	PUZZLE-A002-MF1/8G
Power cord	1	1
Rack mounting ears	2	2
Screws for rack mounting ears	6	6
USB to console cable	Option	1
RS-232 to console cable	1	Option
Slide rail	Option	Option

Options

Item	Part No.	Description
USB to console cable	32013-004000-100-RS	ROUND CABLE; LAN CABLE; FTDI Console Cable; 2; 1800MM; (A)USB A TYPE 4P MALE+PCB:FTDI_FT232RL; (B)RJ45 8P8C; RoHS
RS-232 to console cable	32005-005100-100-RS	ROUND CABLE; RS-232/422/485; PUZZLE RS-232 Cable; 2; 500MM; 24AWG; (A)D-SUB 9P MALE+#4-40 Screw; (B)RJ45 PLUG 8P8C; ONE PCS PKG; TC&C; RoHS

IO Interface

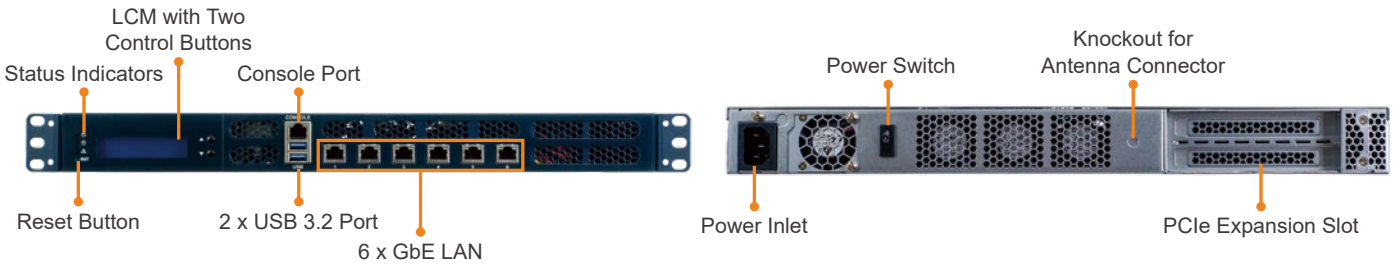

Dimensions (Unit: mm)

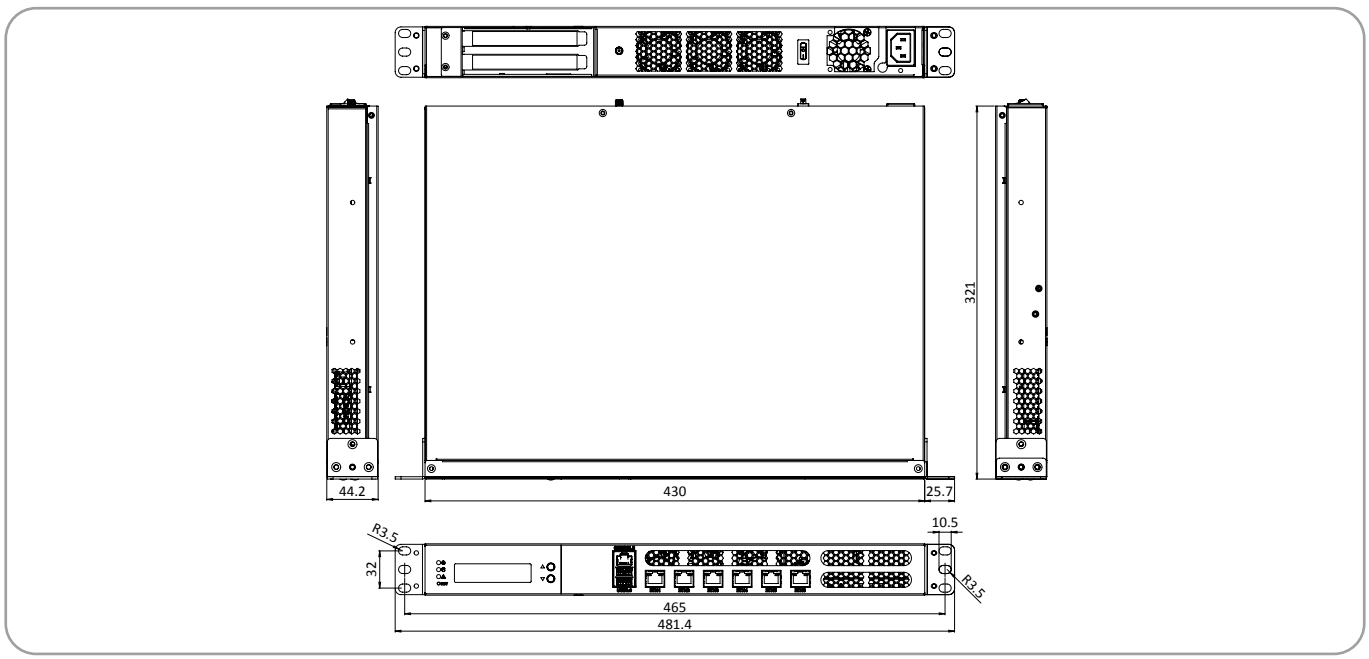

PUZZLE-M801

1U Rackmount Network Appliance with Marvell® ARMADA® 88F8040 High-Performance Quad-Core CPU



Features

- Marvell® ARMADA® 88F8040 high-performance quad-core System-on-Chip processor
- 1 x 288-pin DIMM, DDR4 2400MHz, 16GB (ECC)
- 2 x 10GbE SFP+ via Marvell® ARMADA® 88F8040, 4 x GbE RJ45 via Marvell 88E1512P
- 2 x USB 3.2 Gen 1 (5Gb/s), 1 x RJ45 console, 1 x M.2 B key (SATA & USB 3.2 Gen 1 (5Gb/s)) with SIM holder
- 1 x PCIe x16 slot (PCIe x2 signal)

Specifications

		PUZZLE-M801
Platform	Form Factor	1U
	CPU	Marvell® ARMADA® 88F8040 high-performance quad-core System-on-Chip processor, 1.6GHz
	Chipset	Integrated in CPU
Memory	Memory Technology	DDR4 2400MHz ECC/Non-ECC/RDIMM
	Memory Capacity	Up to 16GB
	Memory Socket	1 x 288-pin DIMM
Network and Security	Network Acceleration and Security Function	• Configurable packet processor • HW offload for networking • Acceleration engines for storage, networking and security • Public Key Processor (RSA/DH/ECC) • Secure Storage • Secure boot
	TPM	N/A
Networking	Ethernet IC	1 GbE PHY: Marvell 88E1512P
	Ethernet Port	2 x 10 GbE SFP+, 4 x 1GbE RJ45 LAN ports
	Network Module Slot	N/A
Expansion Slot	PCIe Slot	1 x PCIe x16 (FHHL) slot PCIe 3.0 x2 signal
	PCIe Mini Card Slot	N/A
	M.2	1 x M.2 B Key (3042/2260) (SATA 3.0 and USB 3.2 Gen 1) Support SATA SSD or 4G LTE module (USB signal)
Storage	Storage	1 x 2.5" SATA HDD/SSD bay support SATA 3.0 (6 Gbps)
	eMMC	32GB
	SD Card	N/A
External I/O	USB	2 x USB 3.2 Gen 1 (5Gb/s)
	Console	1 x RJ45
Internal I/O	HDMI	N/A
	USB	2 x USB 2.0
Power and Mechanical	Power Switch	1 x Power switch
	Reset Button	1 x Reset button
	Power Input	100 V ~ 240 V
	Type/Watt	ATX Power 250W
		90V~264V AC
	Processor Cooling	1 x Active CPU heatsink with fan
	System Cooling	2 x Cooling fans with smart fan
	Antenna Hole	1 x Antenna hole
Physical and Environmental	Storage Temperature	-20°C ~ 75°C (-4°F ~ 167°F)
	Operating Temperature	0°C ~ 40°C (32°F ~ 104°F)
	Operating Humidity	5% ~ 90% non-condensing
	Dimensions (W x L x H) (mm)	430 x 320 x 44.2
	Weight	5kg
OS and Certifications	Certification	CE / FCC / RoHS
	Operating System	Linux Ubuntu 16.04.04
Indicators	LCM	N/A
	LED	1 x Power LED, 1 x Storage LED, 1 x Alert LED

Ordering Information

Part No.	Description
PUZZLE-M801-A1-R10	1U Rackmount Network Appliance with Marvell Armada 8040 processor, one DDR4 slot, four 1GbE, two 10GbE via SFP+, one PCIe expansion, RoHS
PUZZLE-M801-A1/8G-R10	1U Rackmount Network Appliance with Marvell Armada 8040 processor, 8GB DDR4, one 256GB SSD, four 1GbE, two 10GbE via SFP+, one PCIe expansion, RoHS

Packing List

	PUZZLE-M801-A1	PUZZLE-M801-A1/8G
Power cord	1	1
Rack mounting ears	2	2
Screws for rack mounting ears	6	6
USB to console cable	Option	1
RS-232 to console cable	1	Option

Options

Item	Part No.	Description
USB to console cable	32013-004000-100-RS	ROUND CABLE; LAN CABLE; FTDI Console Cable; 2; 1800MM; (A)USB A TYPE 4P MALE+PCB:FTDI_FT232RL; (B)RJ45 8P8C; RoHS
RS-232 to console cable	32005-005100-100-RS	ROUND CABLE; RS-232/422/485; PUZZLE RS-232 Cable; 2; 500MM; 24AWG; (A) D-SUB 9P MALE+#4-40 Screw; (B)RJ45 PLUG 8P8C; ONE PCS PKG; TC&C; RoHS

IO Interface

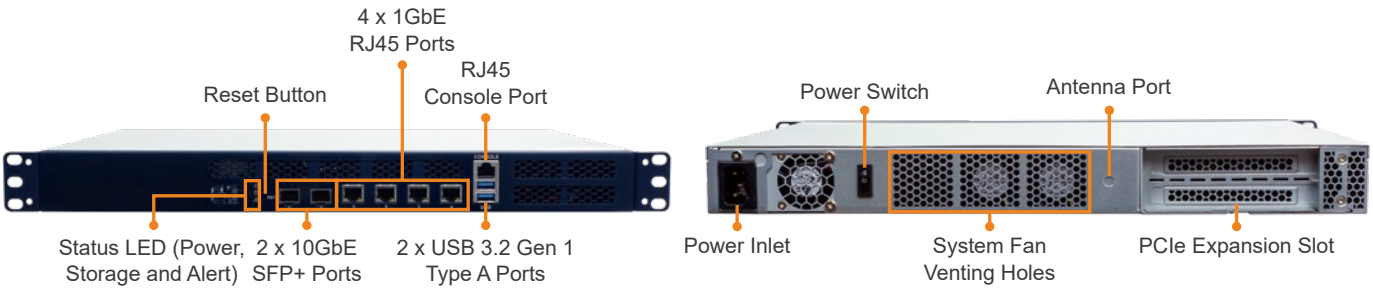

Dimensions *(Unit: mm)*

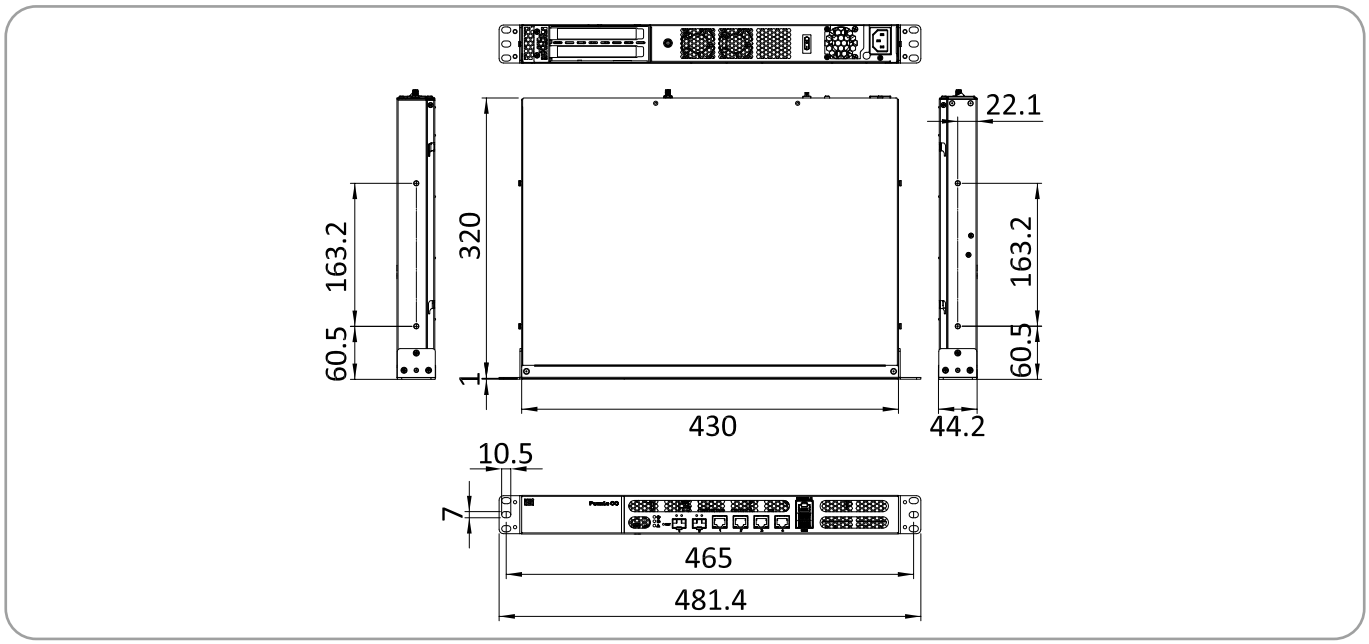

Diverse PulM Network Modules

Dual BIOS

Install the IEI PulM networking module into the slot of the PUZZLE series. The Slot A supports 8 lanes from CPU (one PCIe x8 or two PCIe x4); the Slot B supports two PCIe x4 or four PCIe x2 from PCH.

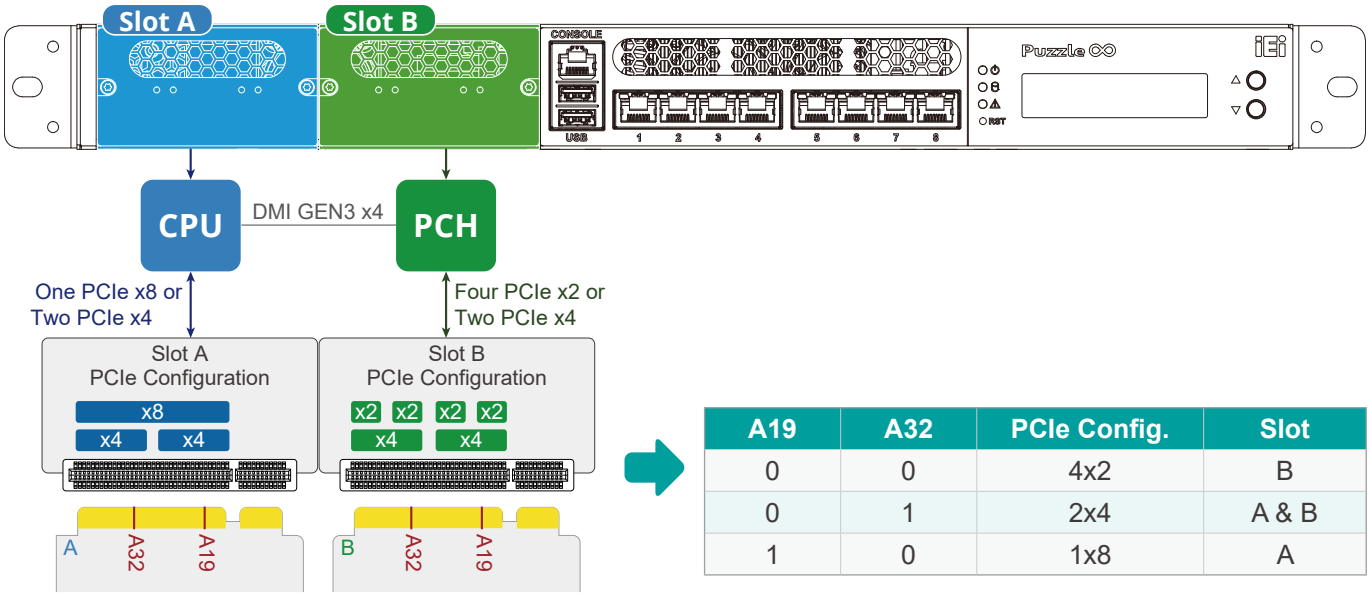

A19	A32	PCIe Config.	Slot
0	0	4x2	B
0	1	2x4	A & B
1	0	1x8	A

Uninterrupted Data Transmission - Bypass Function

With bypass function, the network connected to this device can be connected to each other when the network security device fails.

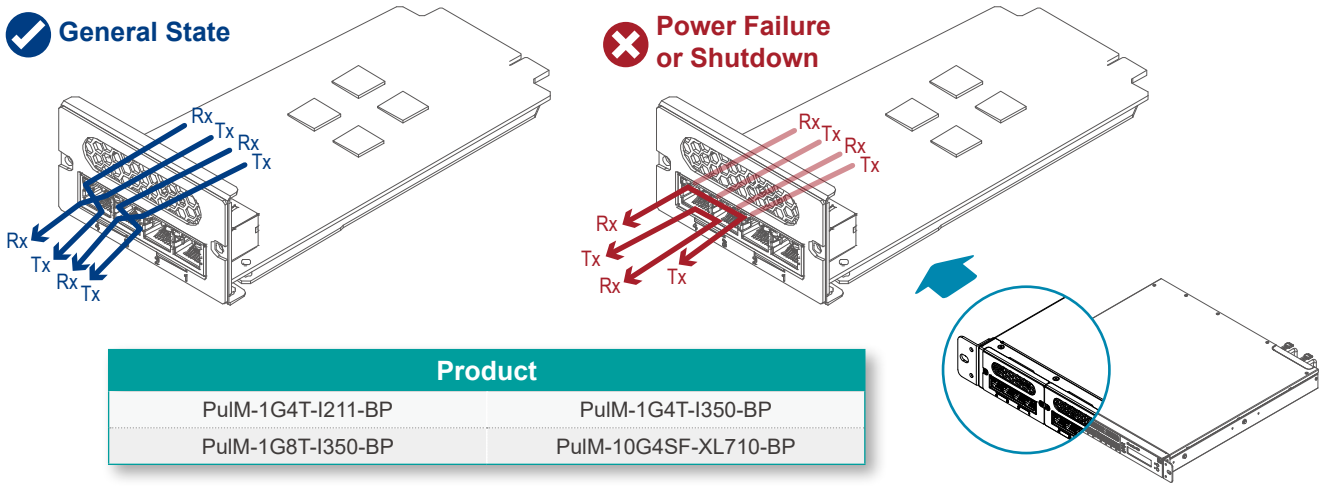

Product	
PulM-1G4T-I211-BP	PulM-1G4T-I350-BP
PulM-1G8T-I350-BP	PulM-10G4SF-XL710-BP

Bypass Configuration in BIOS

Some PulM modules support bypass. To enable/disable bypass function, configure the BIOS menu of the PUZZLE series as described below.

Step 1

Go to Chipset ➔ PCH - IO Configuration ➔ NETWORK Configuration (Bypass Setting)

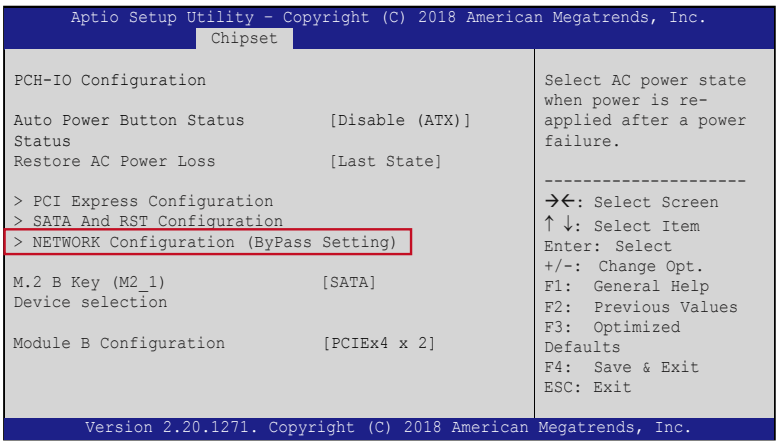

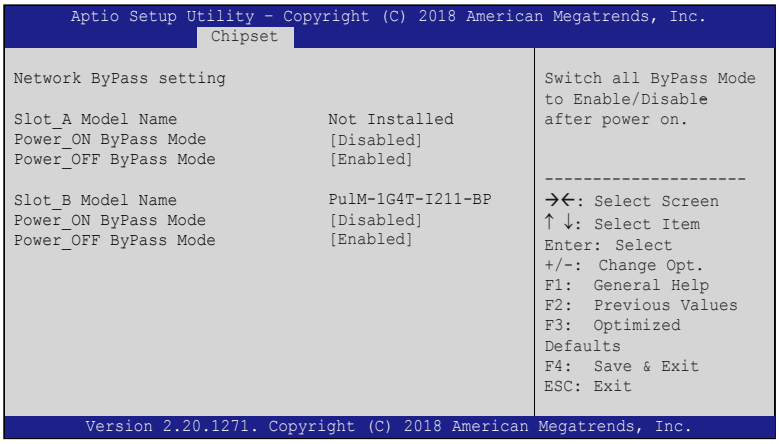

Step 2

The **Network ByPass Setting** menu appears. The model names of the PulM module installed in the PUZZLE series are shown.

Step 3

Configure the Power_ON ByPass Mode and the Power_OFF ByPass Mode BIOS options to enable/disable bypass function of the installed PulM modules.

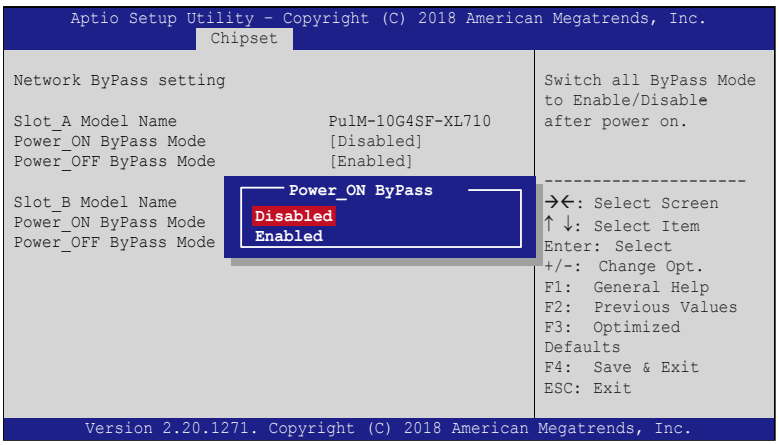

PUZZLE System	Power_ON Bypass Mode		Power_OFF Bypass Mode	
BIOS Setting	Disabled	Enabled	Disabled	Enabled
PulM Bypass Modules	Close	Open	Close	Open

Step 4

Press F4 to save and exit the BIOS menu. The PUZZLE series will reboot with the new settings.

2U PulM Series Selection Guide

	PulM-100G2SF-E810	PulM-25G2SF/T-MLX	PulM-10G2SF/T-X710	PulM-10G4SF/T-XL710
Chipset	Intel® E810	Mellanox ConnectX-4	Intel® X710	Intel® XL710
Bypass	No	No	No	No
Host Interface	PCIe 4.0 x8	PCIe 3.0 x8	PCIe 3.0 x8	PCIe 3.0 x8
LAN Interface	QSFP28	SFP+	SFP+	SFP+
Speed	1GbE / 10GbE / 25GbE / 50GbE / 100GbE	1GbE / 10GbE / 25GbE	1GbE/10GbE	1GbE/10GbE
LAN Port Number	2	2	2	4
Storage Temp.	-20°C ~ 75°C (-4°F ~ 167°F)			
Operating Temp.	0°C ~ 40°C (32°F ~ 104°F)			
Humidity	5% ~ 90% RH, non-condensing			
Dimensions (mm)	165.50 (L) x 77.8 (W) x 44.2 (H)			
Certification	CE / FCC / RoHS	CE / FCC / RoHS	RoHS	CE / FCC / RoHS

	PulM-10G4SF/T-XL710-BP	PulM-10G4SF/T-MLX	PulM-1G4SF/T-I350	PulM-1G8SF/T-I350
Chipset	Intel® XL710	Mellanox ConnectX-4	Intel® I350-AM4	Intel® I350-AM4
Bypass	Yes, two pairs	No	No	No
Host Interface	PCIe 3.0 x8	2 PCIe 3.0 x4	2 PCIe 2.0 x4	2 PCIe 2.0 x4
LAN Interface	SFP+	SFP+	SFP	SFP
Speed	1GbE/10GbE	1GbE/10GbE	GbE	GbE
LAN Port Number	4	4	4	8
Storage Temp.	-20°C ~ 75°C (-4°F ~ 167°F)			
Operating Temp.	0°C ~ 40°C (32°F ~ 104°F)			
Humidity	5% ~ 90% RH, non-condensing			
Dimensions (mm)	165.50 (L) x 77.8 (W) x 44.2 (H)			
Certification	RoHS	CE / FCC / RoHS	RoHS	RoHS

	PulM-1G4T/T-I350	PulM-1G4T/T-I350-BP	PulM-1G8T/T-I350	PulM-1G8T/T-I350-BP
Chipset	Intel® I350-AM4	Intel® I350-AM4	Intel® I350-AM4	Intel® I350-AM4
Bypass	No	Yes, two pairs	No	Yes, four pairs
Host Interface	2 PCIe 2.0 x4	2 PCIe 2.0 x4	2 PCIe 2.0 x4	2 PCIe 2.0 x4
LAN Interface	RJ45	RJ45	RJ45	RJ45
Speed	GbE	GbE	GbE	GbE
LAN Port Number	4	4	8	8
Storage Temp.	-20°C ~ 75°C (-4°F ~ 167°F)			
Operating Temp.	0°C ~ 40°C (32°F ~ 104°F)			
Humidity	5% ~ 90% RH, non-condensing			
Dimensions (mm)	165.50 (L) x 77.8 (W) x 44.2 (H)			
Certification	CE / FCC / RoHS	CE / FCC / RoHS	CE / FCC / RoHS	CE / FCC / RoHS

1U PulM Series Selection Guide

	PulM-25G2SF-MLX	PulM-10G2SF-X710	PulM-10G4SF-XL710	PulM-10G4SF-XL710-BP	PulM-10G4SF-MLX
Chipset	Mellanox ConnectX-4	Intel® X710	Intel® XL710	Intel® XL710	Mellanox ConnectX-4
Bypass	No	No	No	Yes, two pairs	No
Host Interface	PCIe 3.0 x8	PCIe 3.0 x8	PCIe 3.0 x8	PCIe 3.0 x8	2 PCIe 3.0 x4
LAN Interface	SFP+	SFP+	SFP+	SFP+	SFP+
Speed	1GbE/ 10GbE/ 25GbE	1GbE/ 10GbE	1GbE/10GbE	1GbE/10GbE	1GbE/10GbE
LAN Port Number	2	2	4	4	4
Storage Temp.	-20°C ~ 75°C (-4°F ~ 167°F)				
Operating Temp.	0°C ~ 40°C (32°F ~ 104°F)				
Humidity	5% ~ 90% RH, non-condensing				
Dimensions (mm)	165.50 (L) x 77.8 (W) x 44.2 (H)				
Certification	CE / FCC / RoHS	RoHS	CE / FCC / RoHS	RoHS	CE / FCC / RoHS

	PulM-10G4T-AQC107	PulM-1G4SF-I350	PulM-1G8SF-I350	PulM-1G4T-I211	PulM-1G4T-I211-BP
Chipset	Aquantia AQC107	Intel® I350-AM4	Intel® I350-AM4	Intel® I211	Intel® I211
Bypass	No	No	No	No	Yes, two pairs
Host Interface	4 PCIe 3.0 x2	2 PCIe 2.0 x4	2 PCIe 2.0 x4	4 PCIe 2.0 x2	4 PCIe 2.0 x2
LAN Interface	RJ45	SFP	SFP	RJ45	RJ45
Speed	10GBASE-T/ 5GBASE-T/ 2.5GBASE-T/ 1000BASE-T/ 100BASE-TX	GbE	GbE	GbE	GbE
LAN Port Number	2	4	8	4	4
Storage Temp.	-20°C ~ 75°C (-4°F ~ 167°F)				
Operating Temp.	0°C ~ 40°C (32°F ~ 104°F)				
Humidity	5% ~ 90% RH, non-condensing				
Dimensions (mm)	165.50 (L) x 77.8 (W) x 44.2 (H)				
Certification	RoHS	RoHS	RoHS	RoHS	RoHS

	PulM-1G4T-I350	PulM-1G4T-I350-BP	PulM-1G8T-I350	PulM-1G8T-I350-BP	PulM-1G8T-BCM5720
Chipset	Intel® I350-AM4	Intel® I350-AM4	Intel® I350-AM4	Intel® I350-AM4	Broadcom BCM5720
Bypass	No	Yes, two pairs	No	Yes, four pairs	No
Host Interface	2 PCIe 2.0 x4	2 PCIe 2.0 x4	2 PCIe 2.0 x4	2 PCIe 2.0 x4	4 PCIe 2.0 x2
LAN Interface	RJ45	RJ45	RJ45	RJ45	RJ45
Speed	GbE	GbE	GbE	GbE	GbE
LAN Port Number	4	4	8	8	8
Storage Temp.	-20°C ~ 75°C (-4°F ~ 167°F)				
Operating Temp.	0°C ~ 40°C (32°F ~ 104°F)				
Humidity	5% ~ 90% RH, non-condensing				
Dimensions (mm)	165.50 (L) x 77.8 (W) x 44.2 (H)				
Certification	CE / FCC / RoHS	CE / FCC / RoHS	CE / FCC / RoHS	CE / FCC / RoHS	RoHS

	PulM-2P1M	PulM-M2-2S
Interface	1 PCIe 3.0 x4	2 PCIe 3.0 x4
Onboard IC	ASM1812 (PCIe Gen2x4) FL1100EX (PCI-E To USB 3.0 (4 Port))	N/A
M.2	1 x 2230/2242 M.2 B key (PCIe 2.0, USB 3.2 Gen1) with SIM card slot	2 x M key 2260/2280/22110 (PCIe 3.0 x4/NVMe)
PCIe	2 x PCIe Mini (PCIe 2.0, USB 2.0) with SIM card slot	N/A
Storage Temp.	-20°C ~ 75°C (-4°F ~ 167°F)	
Operating Temp.	0°C ~ 40°C (32°F ~ 104°F)	
Humidity	5% ~ 90% RH, non-condensing	
Dimensions (mm)	165.50 (L) x 77.8 (W) x 44.2 (H)	
Certification	RoHS	RoHS

PuIM-100G2SF-E810

Intel® Ethernet Controller EZE810CAM2 based Network Interface Card with 2 x QSFP28 by PCIe 4.0 x8 interface



Features

- 1 x Intel® E810 Ethernet controller
- 2 ports 100GbE QSFP28 connector
- PCIe 4.0 x8 interface
- RoHS compliant

Specifications

	PuIM-100G2SF-E810
Form Factor	IEI Networking Module - PuIM
NIC	Intel® E810
LAN Bypass	N/A
LAN Interface	QSFP28
Speed	100GbE
Ports	2
Host Interface	PCIe 4.0 x8
Storage Temp.	-20°C ~ 75°C (-4°F ~ 167°F)
Operating Temp.	0°C ~ 40°C (32°F ~ 104°F)
Humidity	5% ~ 90% RH, Non-condensing
Dimensions (mm)	165.50 (L) x 77.8 (W) x 44.2 (H)
Compliance	RoHS

Dimensions *(Unit: mm)*

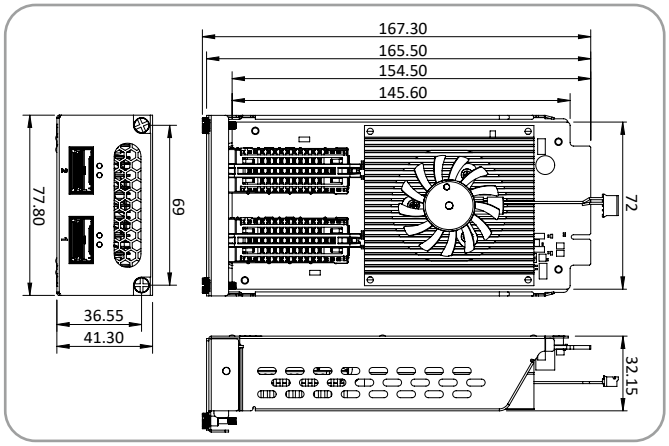

Ordering Information

Part No.	Description
PuIM-100G2SF-E810-R10	Intel® Ethernet Controller EZE810CAM2 based Network Interface Card with 2 x QSFP28 by PCIe 4.0 x8 interface

Packing List

1 x PuIM-100G2SF-E810 module	1 x QIG

Block Diagram

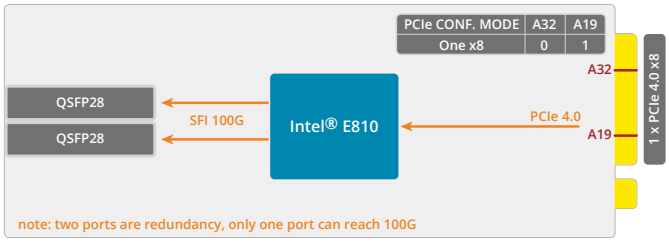

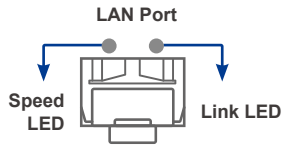

LED	State	Description
Link (Right)	Yellow	Active
Speed (Left)	Green	100Gbps data rate
	Orange	other data rate

Hardware Installation

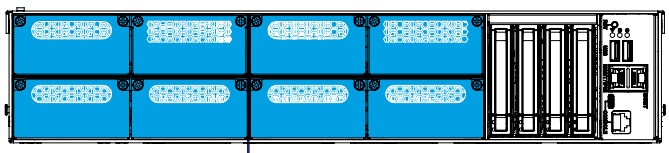

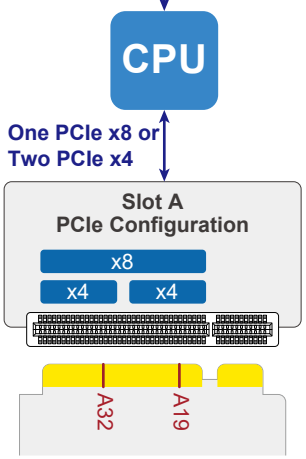

Install the IEI PuIM-100G2SF-E810 networking module into the slot of the PUZZLE-IN005. All slots support 8 lanes of PCIe gen4 signal from CPU (one PCIe x8 or two PCIe x4).

A19	A32	PCIe Config.
0	1	2x4
1	0	1x8

PuIM-25G2SF-MLX

Mellanox ConnectX-4 Lx based Network Interface Card support Dual 25GbE with 2 x SFP28 and PCIe 3.0 x8 Interface



Features

- 1 x Mellanox ConnectX-4 Lx EN
- 2 x 25 GbE SFP28 connectors
- PCIe 3.0 x8
- RoHS / CE / FCC compliant

Specifications

Model Name	PuIM-25G2SF-MLX	PuIM-25G2SF/T-MLX
Form Factor	IEI Networking Module	
NIC	Mellanox ConnectX-4 Lx EN	
LAN Interface	SFP28	
Speed	1GbE/10GbE/25GbE	
Ports	2	
Host Interface	PCIe 3.0 x8	
Storage Temp.	-20°C ~ 75°C (-4°F ~ 167°F)	
Operating Temp.	0°C ~ 40°C (32°F ~ 104°F)	
Humidity	5% ~ 90% RH, Non-condensing	
Dimensions (mm)	165.50 (L) x 77.8 (W) x 44.2 (H)	
Compliance	CE / FCC / RoHS	
Support Davice	PUZZLE-IN001 PUZZLE-IN001A PUZZLE-IN004 PUZZLE-A001 PUZZLE-A001A	PUZZLE-IN005

Ordering Information

Part No.	Description
PuIM-25G2SF-MLX-R10	Mellanox ConnectX-4 Lx based Network Interface Card support Dual 25GbE with 2 x SFP28 by 1 PCIe 3.0 x 8 Interface, RoHS
PuIM-25G2SF/T-MLX-R10	Mellanox ConnectX-4 Lx based Network Interface Card support Dual 25GbE with 2 x SFP28 by 1 PCIe 3.0 x 8 Interface, RoHS

Packing List

Part No.	L-shaped T10 PuIM Wrench	Torx Screws	QIG
PuIM-25G2SF-MLX-R10	1	2	1
PuIM-25G2SF/T-MLX-R10	N/A	N/A	1

Dimensions *(Unit: mm)*

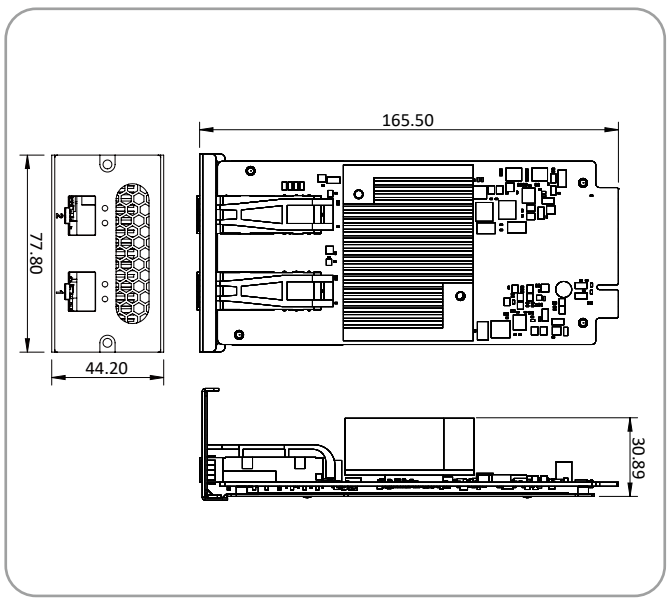

Block Diagram

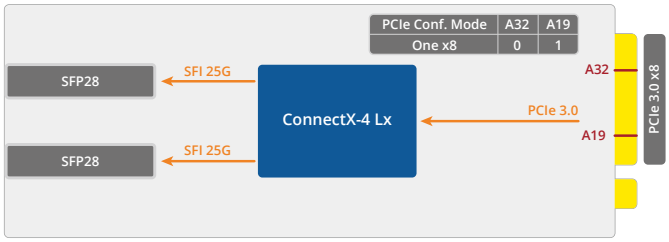

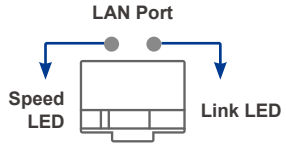

LED	State	Description
Link (Right)	Yellow	Active
Speed (Left)	Green	25 Gbps data rate
	Yellow	10 Gbps/1 Gbps data rate

PuIM-10G2SF-X710

Intel® Ethernet Controller X710-BM2 based Network Interface Card with 2 x SFP+ by 1 PCIe 3.0 x8 interface



Features

- 1 x Intel® Ethernet Controller X710-BM2
- 2 x 10 GbE SFP+ connectors
- PCIe 3.0 x8
- RoHS compliant

Specifications

Model Name	PuIM-10G2SF-X710	PuIM-10G2SF/T-X710
Form Factor	IEI Networking Module	
NIC	Intel® Ethernet Controller X710-BM2	
LAN Interface	SFP+	
Speed	1GbE/ 10GbE	
Ports	2	
Host Interface	PCIe 3.0 x8	
Storage Temp.	-20°C ~ 75°C (-4°F ~ 167°F)	
Operating Temp.	0°C ~ 40°C (32°F ~ 104°F)	
Humidity	5% ~ 90% RH, Non-condensing	
Dimensions (mm)	165.50 (L) x 77.8 (W) x 44.2 (H)	
Compliance	RoHS	
Support Davice	PUZZLE-IN001 PUZZLE-IN001A PUZZLE-IN004	PUZZLE-A001 PUZZLE-A001A PUZZLE-IN005

Ordering Information

Part No.	Description
PuIM-10G2SF-X710-R10	Intel® Ethernet Controller X710-BM2 based Network Interface Card with 2 x SFP+ by 1 PCIe 3.0 x8 interface, RoHS
PuIM-10G2SF/T-X710-R10	Intel® Ethernet Controller X710-BM2 based Network Interface Card with 2 x SFP+ by 1 PCIe 3.0 x8 interface, RoHS

Packing List

Part No.	L-shaped T10 PuIM Wrench	Torx Screws	QIG
PuIM-10G2SF-X710-R10	1	2	1
PuIM-10G2SF/T-X710-R10	N/A	N/A	1

Dimensions *(Unit: mm)*

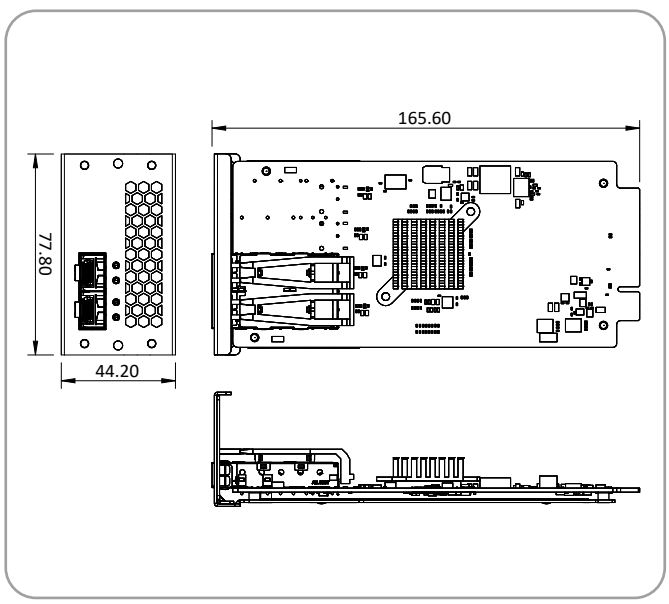

Block Diagram

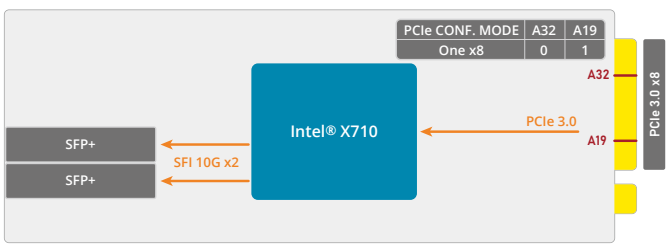

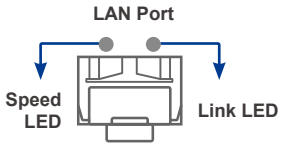

LED	State	Description
Link (Right)	Yellow	Active
Speed (Left)	Green	10 Gbps data rate
	Off	1 Gbps/100Mbps data rate

PuIM-10G4SF-XL710

Intel® Ethernet Controller XL710-BM1 based Network Interface Card with 4 x SFP+ by PCIe 3.0 x8 interface



Features

- 1 x Intel® Ethernet Controller XL710-BM1
- 4 x 10 GbE SFP+ connectors
- PCIe 3.0 x8
- RoHS / CE / FCC compliant

Specifications

Model Name	PuIM-10G4SF-XL710	PuIM-10G4SF/T-XL710
Form Factor	IEI Networking Module	
NIC	Intel® XL710-BM1 Ethernet Controller	
LAN Interface	SFP+	
Speed	1GbE/ 10GbE	
Ports	4	
Host Interface	PCIe 3.0 x8	
Storage Temp.	-20°C ~ 75°C (-4°F ~ 167°F)	
Operating Temp.	0°C ~ 40°C (32°F ~ 104°F)	
Humidity	5% ~ 90% RH, Non-condensing	
Dimensions (mm)	165.50 (L) x 77.8 (W) x 44.2 (H)	
Compliance	CE / FCC / RoHS	
Support Davice	PUZZLE-IN001 PUZZLE-IN001A PUZZLE-IN004 PUZZLE-A001 PUZZLE-A001A	PUZZLE-IN005

Ordering Information

Part No.	Description
PuIM-10G4SF-XL710-R10	Intel® Ethernet Controller XL710-BM1 based Network Interface Card with 4 x SFP+ by 1 PCIe 3.0 x 8 interface,RoHS
PuIM-10G4SF/T-XL710-R10	Intel® Ethernet Controller XL710-BM1 based Network Interface Card with 4 x SFP+ by 1 PCIe 3.0 x 8 interface,RoHS

Packing List

Part No.	L-shaped T10 PuIM Wrench	Torx Screws	QIG
PuIM-10G4SF-XL710-R10	1	2	1
PuIM-10G4SF/T-XL710-R10	N/A	N/A	1

Dimensions *(Unit: mm)*

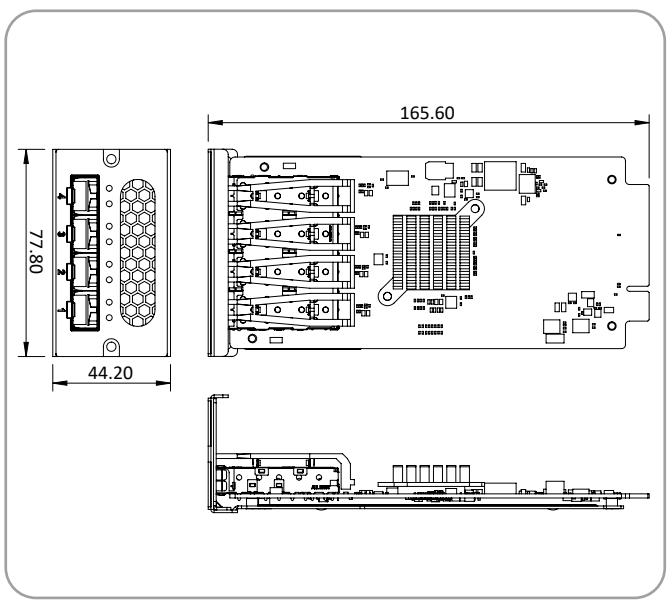

Block Diagram

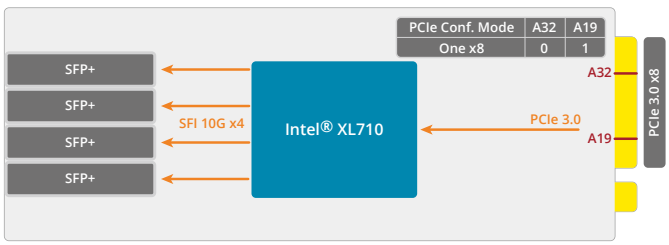

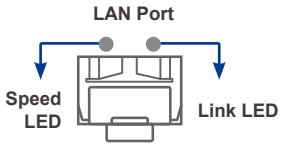

LED	State	Description
Link (Right)	Yellow	Active
Speed (Left)	Green	10 Gbps data rate

PuIM-10G4SF-XL710-BP

Intel® Ethernet Controller XL710-BM1 based Network Interface Card with four 10GbE Fiber ports, two pair Bypass

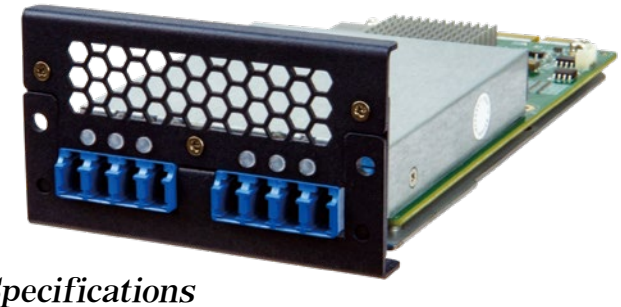

Features

- 1 x Intel® Ethernet Controller XL710-BM1
- 4 x Fiber LC (SR or LR) interface
- PCIe 3.0 x8
- Two LAN bypass model available

Specifications

Model Name	PuIM-10G4SF-XL710-BP	PuIM-10G4SF/T-XL710-BP
Form Factor	IEI Networking Module	
NIC	Intel® XL710-BM1 Ethernet Controller	
Bypass	Yes, two pairs	
LAN Interface	10 GbE fiber LC (SR & LR)	
Speed	10GbE	
Ports	4	
Host Interface	PCIe 3.0 x8	
Storage Temp.	-20°C ~ 75°C (-4°F ~ 167°F)	
Operating Temp.	0°C ~ 40°C (32°F ~ 104°F)	
Humidity	5% ~ 90% RH, Non-condensing	
Dimensions (mm)	165.50 (L) x 77.8 (W) x 44.2 (H)	
Compliance	CE / FCC / RoHS	
Support Davice	PUZZLE-IN001 PUZZLE-IN001A PUZZLE-IN004 PUZZLE-A001 PUZZLE-A001A	PUZZLE-IN005

Ordering Information

Part No.	Description
PuIM-10G4SF-XL710-BP-R10	Intel® Ethernet Controller XL710-BM1 based Network Interface Card with four 10GbE Fiber ports, two pair Bypass, RoHS.
PuIM-10G4SF/T-XL710-BP-R10	Intel® Ethernet Controller XL710-BM1 based Network Interface Card with four 10GbE Fiber ports, two pair Bypass, RoHS.

Packing List

Part No.	L-shaped T10 PuIM Wrench	Torx Screws	QIG
PuIM-10G4SF-XL710-BP-R10	1	2	1
PuIM-10G4SF/T-XL710-BP-R10	N/A	N/A	1

Dimensions *(Unit: mm)*

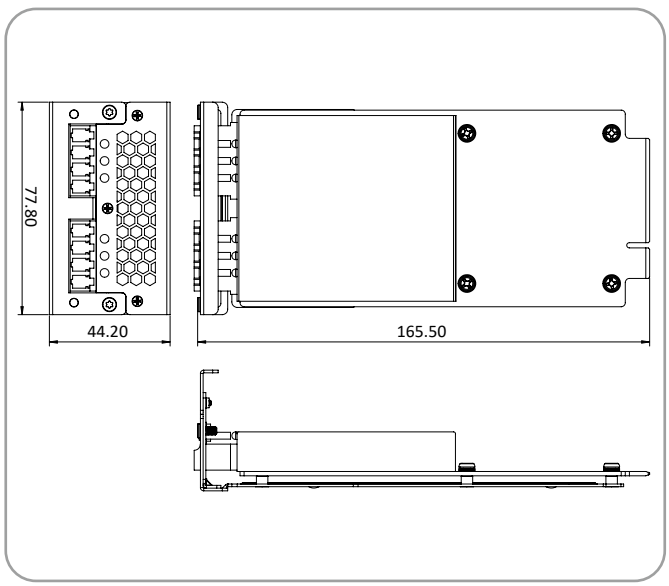

Block Diagram

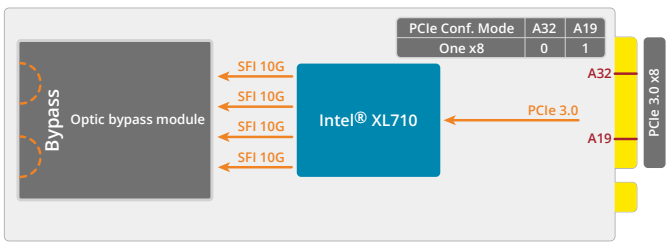

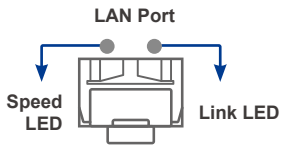

LED	State	Description
Link (Right)	Yellow	Active
Speed (Left)	Green	10 Gbps data rate

PuIM-10G4SF-MLX

Mellanox ConnectX-4 Lx based Network Interface Card support Quad 10GbE with 4 x SFP+ by 2 PCIe 3.0 x4 Interface.



Features

- 2 x Mellanox ConnectX-4
- 4 x 10 GbE SFP+ connectors
- 2 PCIe 3.0 x4
- RoHS compliant

Specifications

Model Name	PuIM-10G4SF-MLX	PuIM-10G4SF/T-MLX
Form Factor	IEI Networking Module	
NIC	Mellanox ConnectX-4	
LAN Interface	SFP+	
Speed	1GbE/ 10GbE	
Ports	4	
Host Interface	2 PCIe 3.0 x4	
Storage Temp.	-20°C ~ 75°C (-4°F ~ 167°F)	
Operating Temp.	0°C ~ 40°C (32°F ~ 104°F)	
Humidity	5% ~ 90% RH, Non-condensing	
Dimensions (mm)	165.50 (L) x 77.8 (W) x 44.2 (H)	
Compliance	RoHS	
Support Davice	PUZZLE-IN001 PUZZLE-IN001A PUZZLE-IN004	PUZZLE-A001 PUZZLE-A001A PUZZLE-IN005

Ordering Information

Part No.	Description
PuIM-10G4SF-MLX-R10	Mellanox ConnectX-4 Lx based Network Interface Card support Quad 10GbE with 4 x SFP+ by 2 PCIe 3.0 x 4 Interface, RoHS.
PuIM-10G4SF/T-MLX-R10	Mellanox ConnectX-4 Lx based Network Interface Card support Quad 10GbE with 4 x SFP+ by 2 PCIe 3.0 x 4 Interface, RoHS.

Packing List

Part No.	L-shaped T10 PuIM Wrench	Torx Screws	QIG
PuIM-10G4SF-MLX-R10	1	2	1
PuIM-10G4SF/T-MLX-R10	N/A	N/A	1

Dimensions *(Unit: mm)*

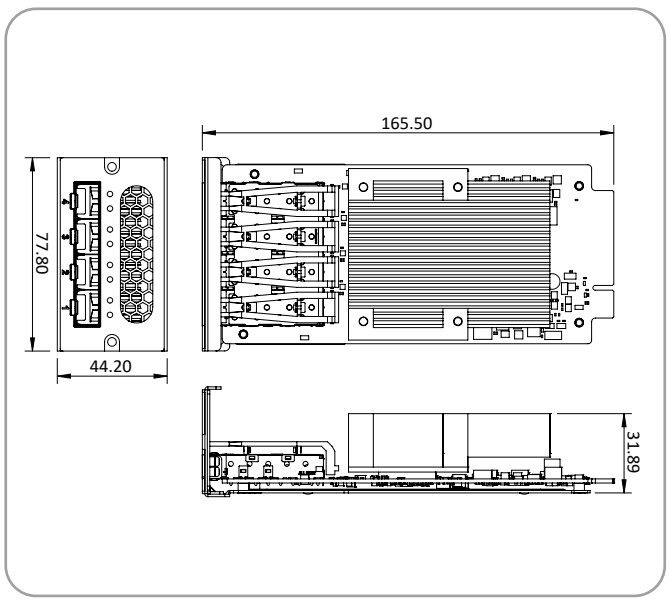

Block Diagram

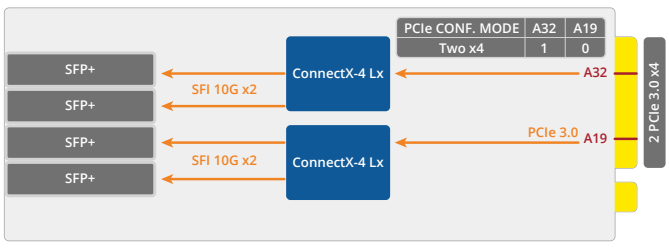

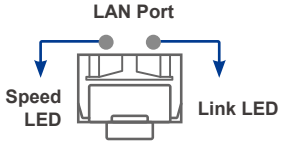

LED	State	Description
Link (Right)	Yellow	Active
Speed (Left)	Green	10 Gbps data rate
	Off	1 Gbps/100 Mbps data rate

PuIM-10G4T-AQC107

Aquantia AQC107 based Network Interface Card with 4 x 10GBASE-T by 4 PCIe 3.0 x2 Interface

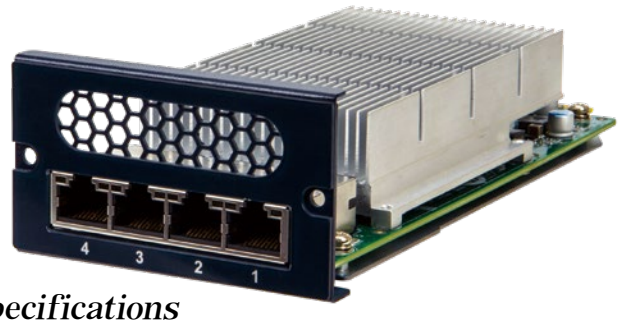

Features

- 4 x Aquantia AQC107
- 4 x 10GBASE-T connectors
- 4 PCIe 3.0 x2
- RoHS compliant

Specifications

Model Name	PuIM-10G4T-AQC107	PuIM-10G4T/T-AQC107
Form Factor	IEI Networking Module	
NIC	Aquantia AQC107	
LAN Interface	10GBASE-T (RJ45)	
Speed	10GBASE-T/ 5GBASE-T/ 2.5GBASE-T/ 1000BASE-T/ 100BASE-TX	
Ports	4	
Host Interface	4 PCIe 3.0 x2	
Storage Temp.	-20°C ~ 75°C (-4°F ~ 167°F)	
Operating Temp.	0°C ~ 40°C (32°F ~ 104°F)	
Humidity	5% ~ 90% RH, Non-condensing	
Dimensions (mm)	165.50 (L) x 77.8 (W) x 44.2 (H)	
Compliance	RoHS	
Support Davice	PUZZLE-IN001 PUZZLE-IN001A PUZZLE-IN004	PUZZLE-A001 PUZZLE-A001A PUZZLE-IN005

Ordering Information

Part No.	Description
PuIM-10G4T-AQC107-R10	Aquantia AQC107 based Network Interface Card with 4 x 10GBASE-T by 4 PCIe 3.0 x2 Interface, RoHS
PuIM-10G4T/T-AQC107-R10	Aquantia AQC107 based Network Interface Card with 4 x 10GBASE-T by 4 PCIe 3.0 x2 Interface, RoHS

Packing List

Part No.	L-shaped T10 PuIM Wrench	Torx Screws	QIG
PuIM-10G4T-AQC107-R10	1	2	1
PuIM-10G4T/T-AQC107-R10	N/A	N/A	1

Dimensions *(Unit: mm)*

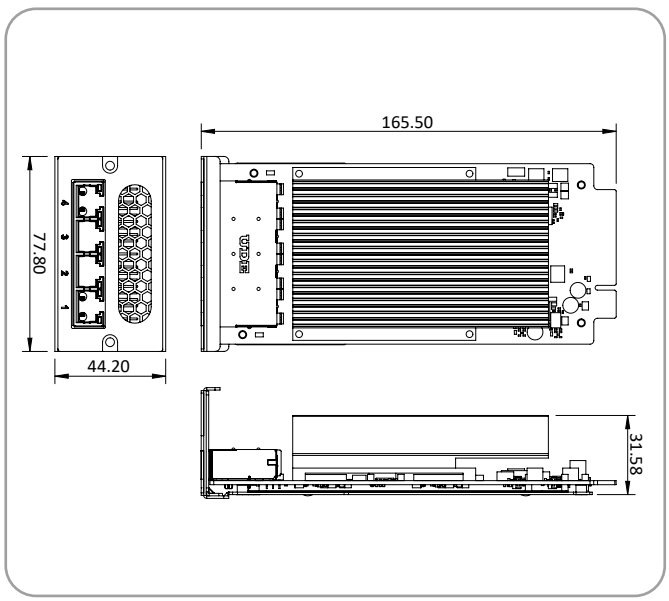

Block Diagram

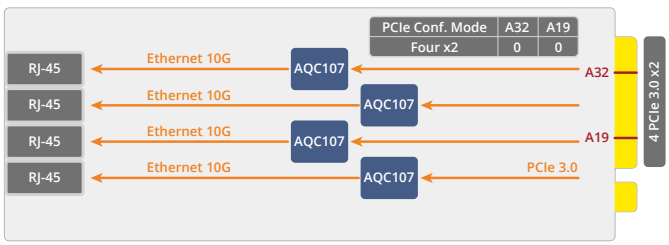

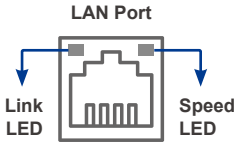

LED	State	Description
Link (Left)	Yellow	Active
Speed (Right)	Green	10 Gbps date rate
	Orange	5 Gbps/1 Gbps/ 100 Mbps data rate

PuIM-1G4SF-I350

Intel® Ethernet Controller I350-AM4 based Network Interface Card with 4 x SFP by 2 PCIe 2.0 x4 interface



Features

- 1 x Intel® Ethernet Controller I350-AM4
- 4 x GbE SFP connectors
- 2 PCIe2.0 x4
- RoHS compliant

Specifications

Model Name	PuIM-1G4SF-I350	PuIM-1G4SF/T-I350
Form Factor	IEI Networking Module	
NIC	Intel® Ethernet Controller I350-AM4	
LAN Interface	SFP	
Speed	1GbE	
Ports	4	
Host Interface	2 PCIe 2.0 x4	
Storage Temp.	-20°C ~ 75°C (-4°F ~ 167°F)	
Operating Temp.	0°C ~ 40°C (32°F ~ 104°F)	
Humidity	5% ~ 90% RH, Non-condensing	
Dimensions (mm)	165.50 (L) x 77.8 (W) x 44.2 (H)	
Compliance	RoHS	
Support Davice	PUZZLE-IN001 PUZZLE-IN001A PUZZLE-IN004	PUZZLE-A001 PUZZLE-A001A PUZZLE-IN005

Ordering Information

Part No.	Description
PuIM-1G4SF-I350-R10	Intel® Ethernet Controller I350-AM4 based Network Interface Card with 4 x SFP by 2 PCIe 2.0 x4 interface, RoHS
PuIM-1G4SF/T-I350-R10	Intel® Ethernet Controller I350-AM4 based Network Interface Card with 4 x SFP by 2 PCIe 2.0 x4 interface, RoHS

Packing List

Part No.	L-shaped T10 PuIM Wrench	Torx Screws	QIG
PuIM-1G4SF-I350-R10	1	2	1
PuIM-1G4SF/T-I350-R10	N/A	N/A	1

Dimensions *(Unit: mm)*

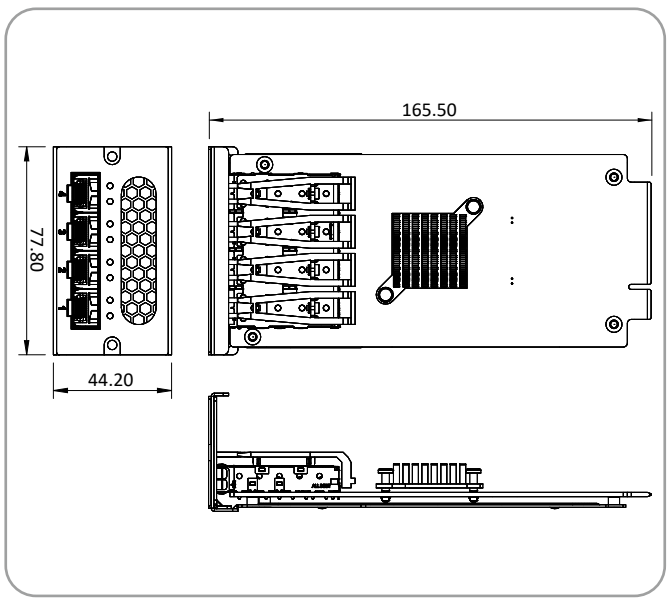

Block Diagram

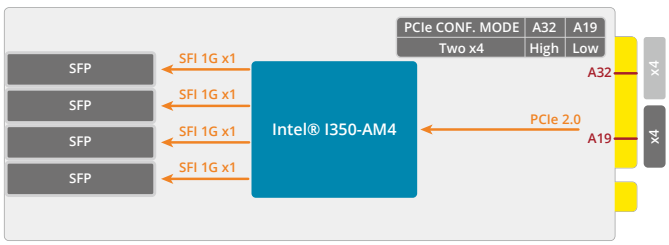

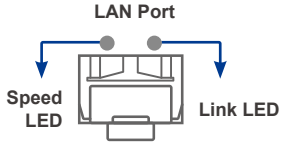

LED	State	Description
Link (Right)	Yellow	Active
Speed (Left)	Green	1 Gbps data rate

PuIM-1G8SF-I350

Intel® Ethernet Controller I350-AM4 based Network Interface Card with 8 x SFP by 2 PCIe 2.0 x4 interface



Features

- 2 x Intel® Ethernet Controller I350-AM4
- 8 x GbE SFP connectors
- 2 PCIe2.0 x4
- RoHS compliant

Specifications

Model Name	PuIM-1G8SF-I350	PuIM-1G8SF/T-I350
Form Factor	IEI Networking Module	
NIC	Intel® Ethernet Controller I350-AM4	
LAN Interface	SFP	
Speed	1GbE	
Ports	8	
Host Interface	2 PCIe 2.0 x4	
Storage Temp.	-20°C ~ 75°C (-4°F ~ 167°F)	
Operating Temp.	0°C ~ 40°C (32°F ~ 104°F)	
Humidity	5% ~ 90% RH, Non-condensing	
Dimensions (mm)	165.50 (L) x 77.8 (W) x 44.2 (H)	
Compliance	RoHS	
Support Davice	PUZZLE-IN001 PUZZLE-IN001A PUZZLE-IN004	PUZZLE-A001 PUZZLE-A001A PUZZLE-IN005

Ordering Information

Part No.	Description
PuIM-1G8SF-I350-R10	Intel® Ethernet Controller I350-AM4 based Network Interface Card with 8 x SFP by 2 PCIe 2.0 x4 interface.
PuIM-1G8SF/T-I350-R10	Intel® Ethernet Controller I350-AM4 based Network Interface Card with 8 x SFP by 2 PCIe 2.0 x4 interface.

Packing List

Part No.	L-shaped T10 PuIM Wrench	Torx Screws	QIG
PuIM-1G8SF-I350-R10	1	2	1
PuIM-1G8SF/T-I350-R10	N/A	N/A	1

Dimensions *(Unit: mm)*

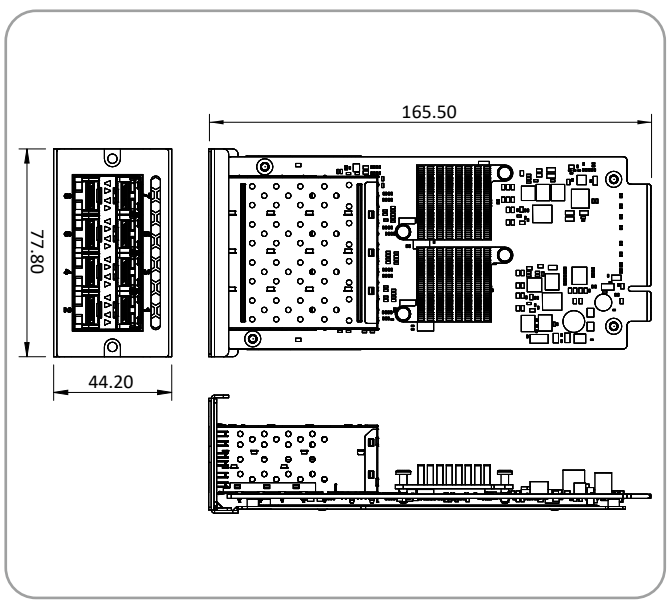

Block Diagram

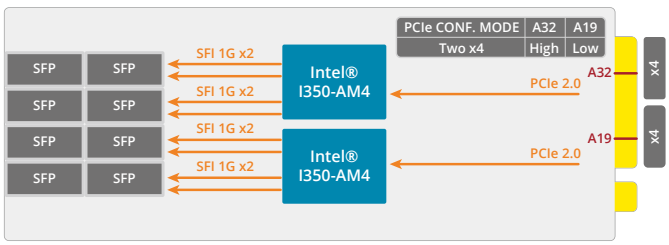

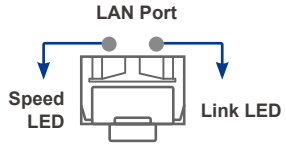

LED	State	Description
Link (Right)	Yellow	Active
Speed (Left)	Green	1 Gbps data rate

PuIM-1G4T-I211

Intel® I211 Ethernet Controller based Network Interface Card with Four 1GbE RJ-45 by 4 PCIe 2.0 x2 Interface



▲ PuIM-1G4T-I211

▲ PuIM-1G4T-I211-BP

Features

- 4 x Intel® I211-AT Ethernet Controller
- 4 x RJ-45 connector
- 4 PCIe 2.0 x2
- LAN bypass (PuIM-1G4T-I211-BP)
- RoHS compliant

Specifications

Model Name	PuIM-1G4T-I211	PuIM-1G4T-I211-BP
Form Factor	IEI Networking Module - PuIM	
NIC	Intel® I211-AT Ethernet Controller	
LAN Bypass	No	Yes, two pairs
LAN Interface	4 x Intel® I211-AT Ethernet Controller	
Speed	GbE	
Ports	4	
Host Interface	4 PCIe 2.0 x2	
Storage Temp.	-20°C ~ 75°C (-4°F ~ 167°F)	
Operating Temp.	0°C ~ 40°C (32°F ~ 104°F)	
Humidity	5% ~ 90% RH, Non-condensing	
Dimensions (mm)	165.50 (L) x 77.8 (W) x 44.2 (H)	
Compliance	RoHS	
Support Davice	PUZZLE-IN001 / PUZZLE-IN001A	

Ordering Information

Part No.	Description
PuIM-1G4T-I211-R10	Intel® I211 Ethernet controller based network interface card with four 1GbE RJ-45 without bypass, four PCIe 2.0x2 interfaces, RoHS
PuIM-1G4T-I211-BP-R10	Intel® I211 Ethernet controller based network interface card with four 1GbE RJ-45 with bypass function, four PCIe 2.0 x2 interfaces, RoHS

Packing List

Part No.	L-shaped T10 PuIM Wrench	Torx Screws	QIG
PuIM-1G4T-I211-R10	1	2	1
PuIM-1G4T-I211-BP-R10	1	2	1

Dimensions *(Unit: mm)*

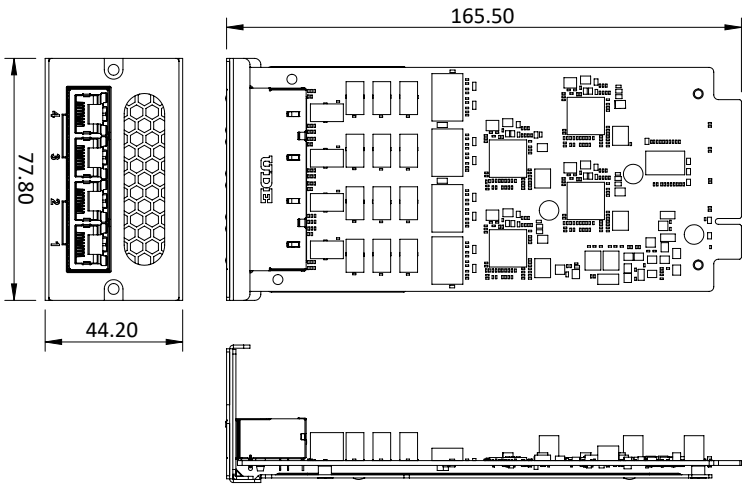

Block Diagram

PuIM-1G4T-I211 Block Diagram

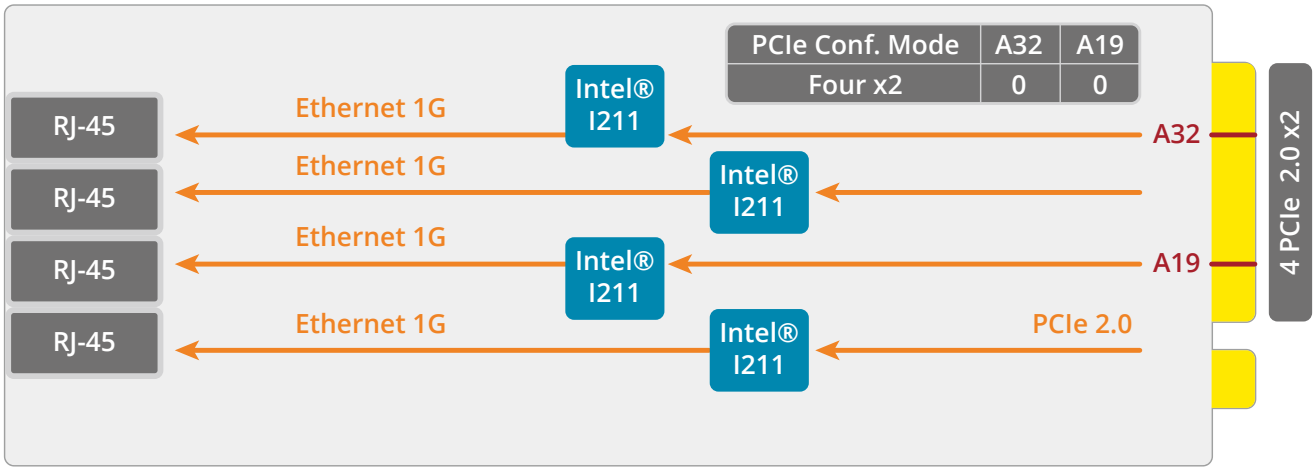

PuIM-1G4T-I211-BP Block Diagram

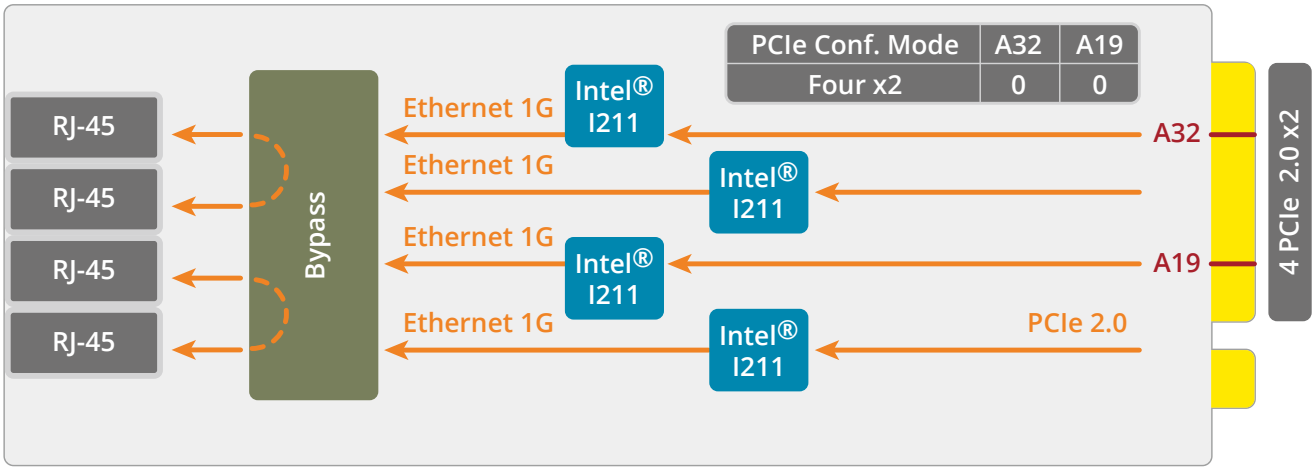

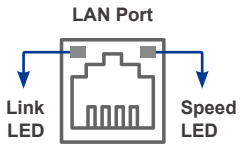

LED	State	Description
Link (Left)	Yellow	Active
Speed (Right)	Green	1 Gbps data rate
	Orange	100 Mbps data rate
Off (Left/Right)	Off	Bypass function (PuIM-1G4T-I211-BP)

PulM-1G4T-I350

Intel® Ethernet Controller I350-AM4 based Network Interface Card with 4 x RJ45 by 2 PCIe 2.0 x4 interface, RoHS



Features

- 1 x Intel® Ethernet Controller I350-AM4
- 4 x GbE RJ45 connectors
- 2 PCIe2.0 x4
- CE / FCC / RoHS compliant

Specifications

Model Name	PulM-1G4T-I350	PulM-1G4T/T-I350
Form Factor	IEI Networking Module	
NIC	Intel® Ethernet Controller I350-AM4	
LAN Interface	RJ45	
Speed	1GbE	
Ports	4	
Host Interface	2 PCIe 2.0 x4	
Storage Temp.	-20°C ~ 75°C (-4°F ~ 167°F)	
Operating Temp.	0°C ~ 40°C (32°F ~ 104°F)	
Humidity	5% ~ 90% RH, Non-condensing	
Dimensions (mm)	165.50 (L) x 77.8 (W) x 44.2 (H)	
Compliance	CE / FCC / RoHS	
Support Davice	PUZZLE-IN001 PUZZLE-IN001A PUZZLE-IN004 PUZZLE-A001 PUZZLE-A001A	PUZZLE-IN005

Ordering Information

Part No.	Description
PulM-1G4T-I350-R10	Intel® Ethernet Controller I350-AM4 based Network Interface Card with 4 x RJ45 by 2 PCIe 2.0 x4 interface, RoHS.
PulM-1G4T/T-I350-R10	Intel® Ethernet Controller I350-AM4 based Network Interface Card with 4 x RJ45 by 2 PCIe 2.0 x4 interface, RoHS.

Packing List

Part No.	L-shaped T10 PulM Wrench	Torx Screws	QIG
PulM-1G4T-I350-R10	1	2	1
PulM-1G4T/T-I350-R10	N/A	N/A	1

Dimensions *(Unit: mm)*

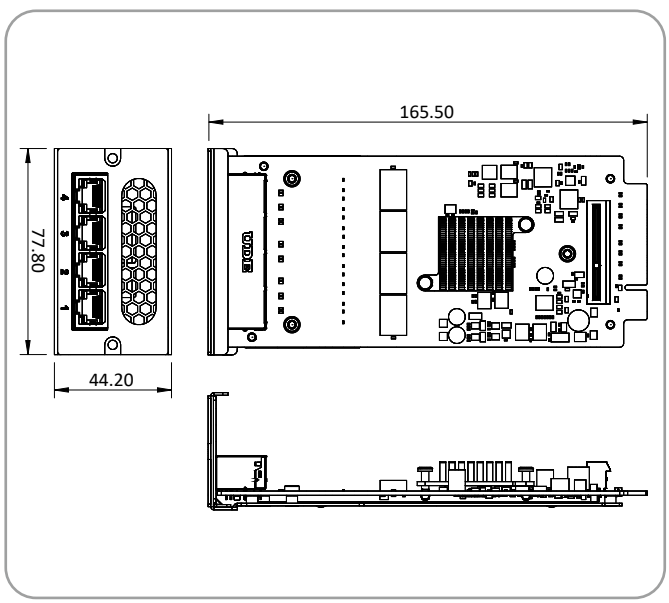

Block Diagram

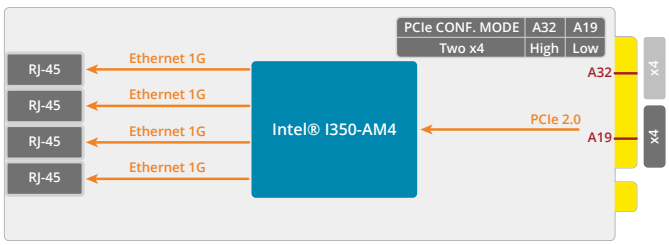

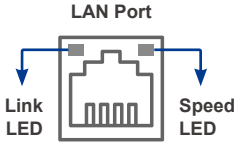

LED	State	Description
Link (Left)	Yellow	Active
Speed (Right)	Green	1 Gbps data rate
	Orange	100 Mbps data rate

PuIM-1G4T-I350-BP

Intel® Ethernet Controller I350-AM4 based Network Interface Card with 4 x RJ45 by 2 PCIe 2.0 x4 interface, RoHS



Features

- 1 x Intel® Ethernet Controller I350-AM4
- 4 x GbE RJ45 connectors
- 2 PCIe2.0 x4
- LAN Bypass
- CE / FCC / RoHS compliant

Specifications

Model Name	PuIM-1G4T-I350-BP	PuIM-1G4T/T-I350-BP
Form Factor	IEI Networking Module	
NIC	Intel® Ethernet Controller I350-AM4	
Bypass	Yes, two pairs	
LAN Interface	RJ45	
Speed	1GbE	
Ports	4	
Host Interface	2 PCIe 2.0 x4	
Storage Temp.	-20°C ~ 75°C (-4°F ~ 167°F)	
Operating Temp.	0°C ~ 40°C (32°F ~ 104°F)	
Humidity	5% ~ 90% RH, Non-condensing	
Dimensions (mm)	165.50 (L) x 77.8 (W) x 44.2 (H)	
Compliance	CE / FCC / RoHS	
Support Davice	PUZZLE-IN001 PUZZLE-IN001A PUZZLE-IN004 PUZZLE-A001 PUZZLE-A001A	PUZZLE-IN005

Ordering Information

Part No.	Description
PuIM-1G4T-I350-BP-R10	Intel® Ethernet Controller I350-AM4 based Network Interface Card with 4 x RJ45 by 2 PCIe 2.0 x4 interface, RoHS.
PuIM-1G4T/T-I350-BP-R10	Intel® Ethernet Controller I350-AM4 based Network Interface Card with 4 x RJ45 by 2 PCIe 2.0 x4 interface, RoHS.

Packing List

Part No.	L-shaped T10 PuIM Wrench	Torx Screws	QIG
PuIM-1G4T-I350-BP-R10	1	2	1
PuIM-1G4T/T-I350-BP-R10	N/A	N/A	1

Dimensions *(Unit: mm)*

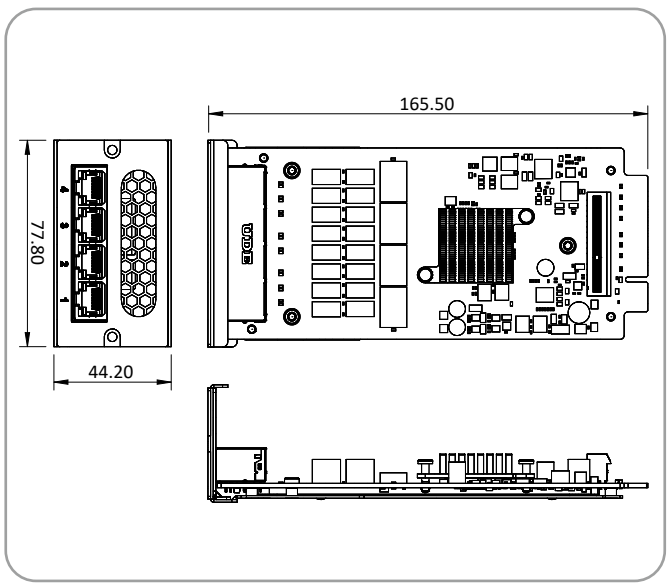

Block Diagram

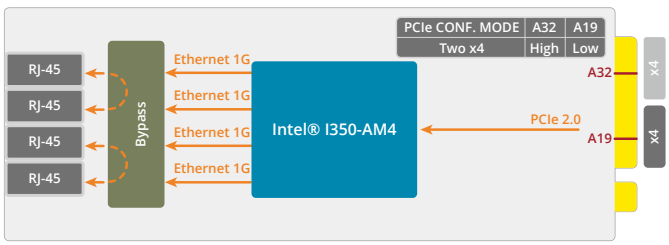

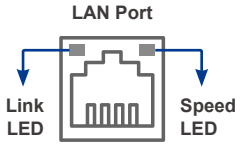

LED	State	Description
Link (Left)	Yellow	Active
Speed (Right)	Green	1 Gbps data rate
	Orange	100 Mbps data rate
Off	Off	Bypass functio

PuIM-1G8T-I350

2 x Intel® Ethernet Controller I350-AM4 based Network Interface Card with 8 x RJ45 by 2 PCIe 2.0 x4 interface, RoHS



Features

- 2 x Intel® Ethernet Controller I350-AM4
- 8 x GbE RJ45 connectors
- 2 PCIe2.0 x4
- CE / FCC / RoHS compliant

Specifications

Model Name	PuIM-1G8T-I350	PuIM-1G8T/T-I350
Form Factor	IEI Networking Module	
NIC	Intel® Ethernet Controller I350-AM4	
LAN Interface	RJ45	
Speed	1GbE	
Ports	8	
Host Interface	2 PCIe 2.0 x4	
Storage Temp.	-20°C ~ 75°C (-4°F ~ 167°F)	
Operating Temp.	0°C ~ 40°C (32°F ~ 104°F)	
Humidity	5% ~ 90% RH, Non-condensing	
Dimensions (mm)	165.50 (L) x 77.8 (W) x 44.2 (H)	
Compliance	CE / FCC / RoHS	
Support Davice	PUZZLE-IN001 PUZZLE-IN001A PUZZLE-IN004	PUZZLE-A001 PUZZLE-A001A PUZZLE-IN005

Ordering Information

Part No.	Description
PuIM-1G8T-I350-R10	Intel® Ethernet Controller I350-AM4 based Network Interface Card with 8 x RJ45 by 2 PCIe 2.0 x4 interface, RoHS.
PuIM-1G8T/T-I350-R10	Intel® Ethernet Controller I350-AM4 based Network Interface Card with 8 x RJ45 by 2 PCIe 2.0 x4 interface, RoHS.

Packing List

Part No.	L-shaped T10 PuIM Wrench	Torx Screws	QIG
PuIM-1G8T-I350-R10	1	2	1
PuIM-1G8T/T-I350-R10	N/A	N/A	1

Dimensions (Unit: mm)

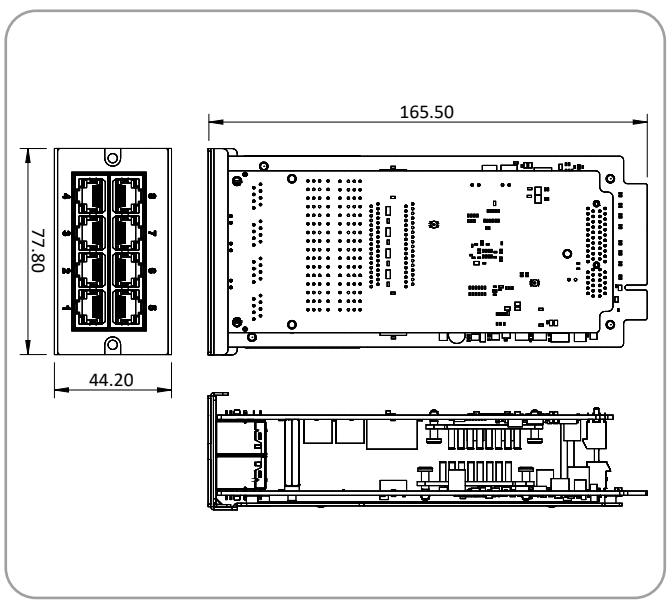

Block Diagram

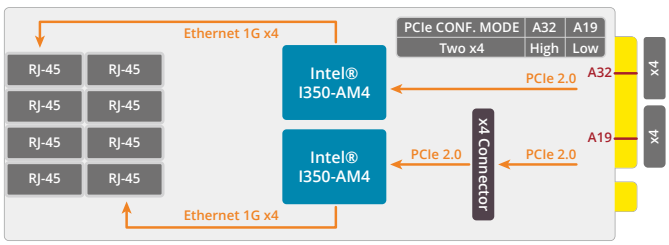

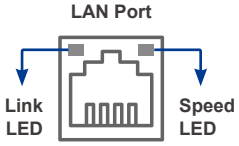

LED	State	Description
Link (Left)	Yellow	Active
Speed (Right)	Green	1 Gbps data rate
	Orange	100 Mbps data rate

PulM-1G8T-I350-BP

Intel® Ethernet Controller I350-AM4 based Network Interface Card with 4 x RJ45 by 2 PCIe 2.0 x4 interface, RoHS



Features

- 2 x Intel® Ethernet Controller I350-AM4
- 8 x GbE RJ45 connectors
- 2 PCIe2.0 x4
- LAN Bypass (by sku)
- CE / FCC / RoHS compliant

Specifications

Model Name	PulM-1G8T-I350-BP	PulM-1G8T/T-I350-BP
Form Factor	IEI Networking Module	
NIC	Intel® Ethernet Controller I350-AM4	
Bypass	Yes, four pairs	
LAN Interface	RJ45	
Speed	1GbE	
Ports	8	
Host Interface	2 PCIe 2.0 x4	
Storage Temp.	-20°C ~ 75°C (-4°F ~ 167°F)	
Operating Temp.	0°C ~ 40°C (32°F ~ 104°F)	
Humidity	5% ~ 90% RH, Non-condensing	
Dimensions (mm)	165.50 (L) x 77.8 (W) x 44.2 (H)	
Compliance	CE / FCC / RoHS	
Support Davice	PUZZLE-IN001 PUZZLE-IN001A PUZZLE-IN004 PUZZLE-A001 PUZZLE-A001A	PUZZLE-IN005

Ordering Information

Part No.	Description
PulM-1G8T-I350-BP-R10	Intel® Ethernet Controller I350-AM4 based Network Interface Card with 8 x RJ45 by 2 PCIe 2.0 x4 with bypass interface, RoHS
PulM-1G8T/T-I350-BP-R10	Intel® Ethernet Controller I350-AM4 based Network Interface Card with 8 x RJ45 by 2 PCIe 2.0 x4 with bypass interface, RoHS

Packing List

Part No.	L-shaped T10 PulM Wrench	Torx Screws	QIG
PulM-1G8T-I350-BP-R10	1	2	1
PulM-1G8T/T-I350-BP-R10	N/A	N/A	1

Dimensions *(Unit: mm)*

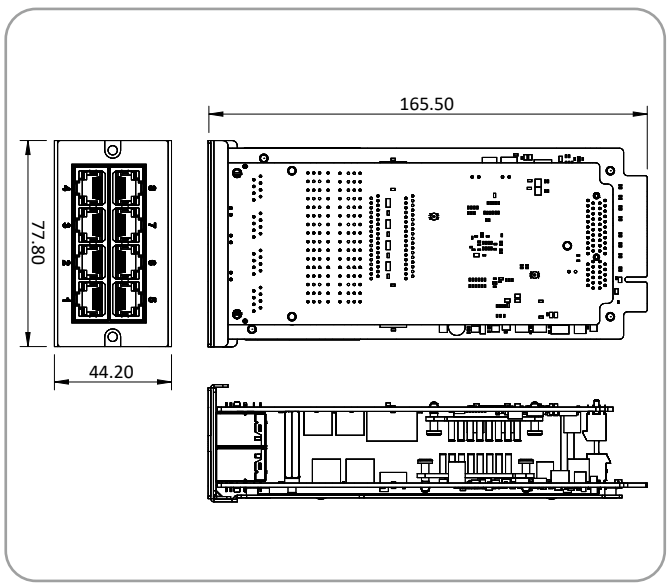

Block Diagram

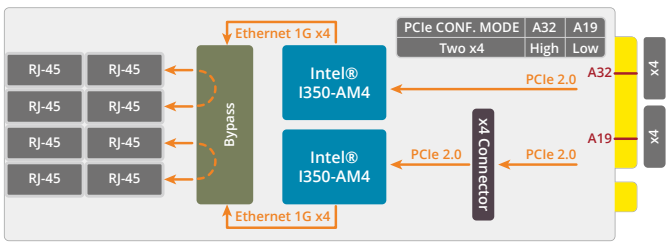

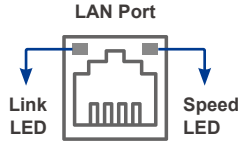

LED	State	Description
Link (Left)	Yellow	Active
Speed (Right)	Green	1 Gbps data rate
	Orange	100 Mbps data rate
Off	Off	Bypass function

PuIM-2P1M

Two Mini-PCIe and One M.2 Expansion Card Support the Wi-Fi or LTE Module, RoHS

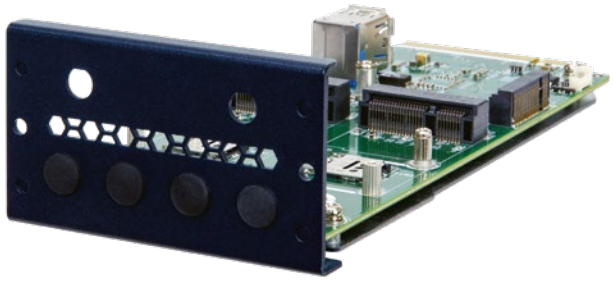

Features

- Supports 2 x PCIe mini and 1 x 2230/2242 M.2 B key
- Mini PCIe and M.2 with SIM card slots
- 2 PCIe 3.0 x4
- RoHS compliant

Specifications

Model Name	PuIM-2P1M
Interface	IEI Networking Module - PuIM
Onboard IC	ASM1812 (PCIe Gen2x4) FL1100EX (PCI-E To USB 3.0 (4 Port))
M.2	1 x 2230/2242 M.2 B key (PCIe 2.0, USB 3.2 Gen1) with SIM card slot
PCIe	2 x PCIe Mini (PCIe, USB 2.0) with SIM card slots
Storage Temp.	-20°C ~ 75°C (-4°F ~ 167°F)
Operating Temp.	0°C ~ 40°C (32°F ~ 104°F)
Humidity	5% ~ 90% RH, Non-condensing
Dimensions (mm)	165.50 (L) x 77.8 (W) x 44.2 (H)
Compliance	RoHS
Support Davice	PUZZLE-IN001 PUZZLE-IN001A PUZZLE-IN004 PUZZLE-A001 PUZZLE-A001A

Ordering Information

Part No.	Description
PuIM-2P1M-R10	Two Mini-PCIe and One M.2 Expansion Card Support the Wi-Fi or LTE Module, RoHS

Packing List

Part No.	L-shaped T10 PuIM Wrench	Torx Screws	QIG
PuIM-2P1M-R10	1	2	1

Dimensions *(Unit: mm)*

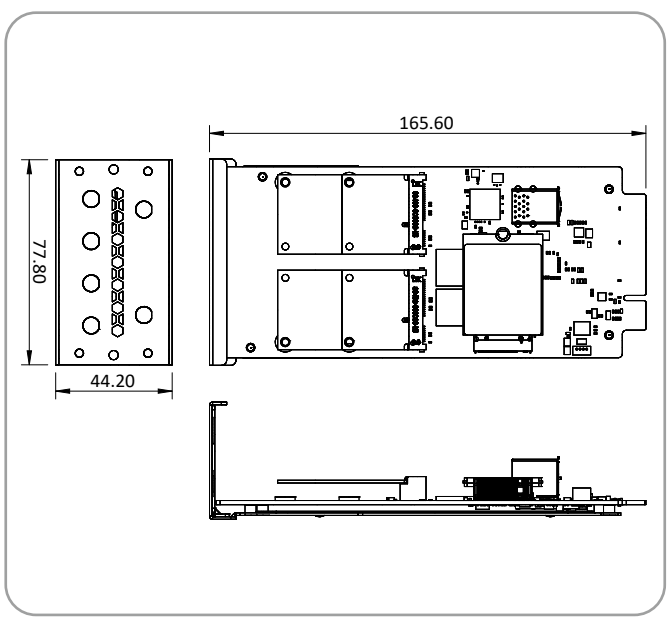

Block Diagram

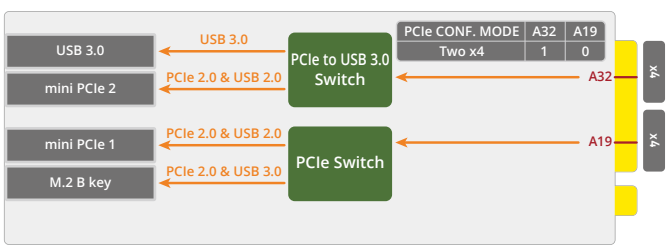

PuIM-M2-2S

M.2 PCIe SSD expansion card supports two M.2 2280 PCIe NVMe (3.0 x4) SSDs, two PCIe 3.0 x4 host interface



Features

- Supports two M.2 2280 PCIe NVMe (3.0 x4) SSDs
- M.2 SSD temperature is monitored in real time by sensor IC
- 2 PCIe 3.0 x4
- LED indicator shows the M.2 status
- RoHS compliant

Specifications

Model Name	PuIM-M2-2S
Interface	IEI Networking Module - PuIM
Onboard IC	N/A
M.2	2 x M key 2260/2280/22110 (PCIe 3.0 x4/NVMe)
PCIe	N/A
Storage Temp.	-20°C ~ 75°C (-4°F ~ 167°F)
Operating Temp.	0°C ~ 40°C (32°F ~ 104°F)
Humidity	5% ~ 90% RH, Non-condensing
Dimensions (mm)	165.50 (L) x 77.8 (W) x 44.2 (H)
Compliance	RoHS
Support Davice	PUZZLE-IN001 PUZZLE-IN001A PUZZLE-IN004 PUZZLE-A001 PUZZLE-A001A

Ordering Information

Part No.	Description
PuIM-M2-2S-R10	M.2 PCIe SSD expansion card supports two M.2 2280 PCIe NVMe (3.0 x4) SSDs; two PCIe 3.0 x4 host interface, RoHS

Packing List

Part No.	L-shaped T10 PuIM Wrench	Thermal Pad kit	Torx Screws	M.2 SSD Screw	QIG
PuIM-M2-2S-R10	1	2	2	4	1

Dimensions *(Unit: mm)*

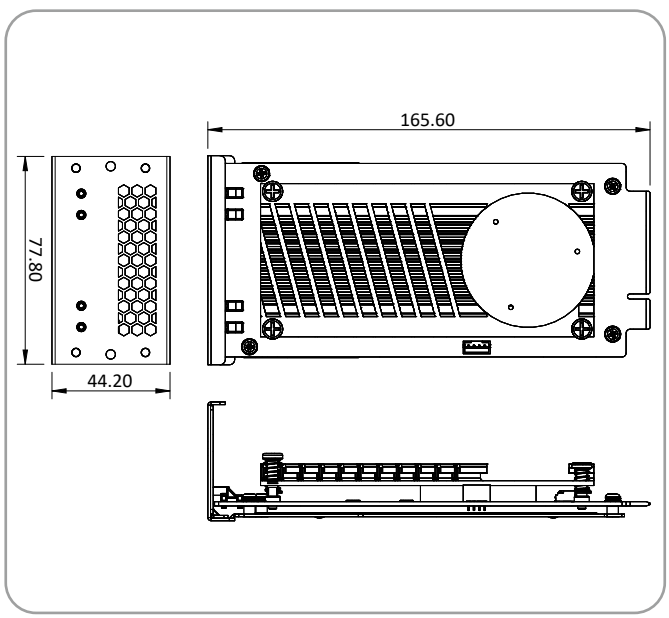

Block Diagram

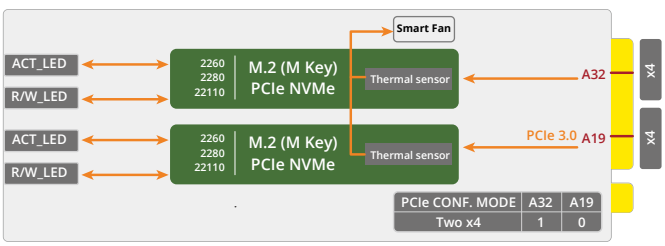

LED	State	Description
Left	Red	Active
Right	Green	Read/Write

Mustang-QA100-C627

Intel® QAT accelerator for Crypto and Compression with lewisburg chipset, PCIe Gen3 x16, RoHS



Features

- 1 x Intel® Lewisburg chipset C627
- Asymmetric and Symmetric encryption and authentication
- Digital signatures
- RSA, DH, and ECC
- Lossless data compression

Specifications

Throughput	
SSL/IPSec	100Gbps
Compression Deflate	100Gbps
Decompression Deflate	100Gbps
RSA Decrypt 1k-bit	550K Ops/sec
RSA Decrypt 2k-bit	100 Ops/Sec

Specifications	
Main Chip	Intel® C627 Chipset
Cooling	Active cooling
Interface	PCIe Gen3 x16
Operating Humidity	0% ~ 90%, non-condensing
Operating Temperature	0°C ~ 40°C
Storage Temperature	-40°C ~ 75°C (-40°F ~ 167°F)
Dimension	144.27 x 68.9 x 15.43 (L x W x H mm)
Regulation	RoHS
Operating system support	Linux

Ordering Information

Part No.	Description
Mustang-QA100-C627-R10	Intel® QAT accelerator for Crypto and Compression with lewisburg chipset, PCIe Gen3 x16, RoHS

Packing List

Mustang-QA100-C627-R10	1 x QIG

Dimensions *(Unit: mm)*

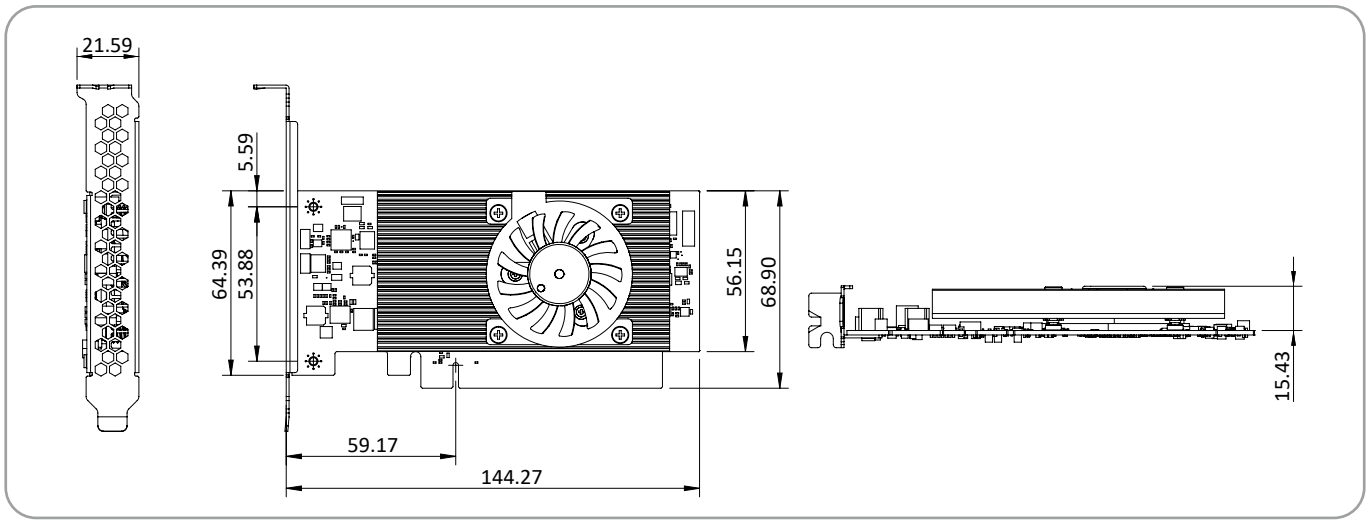

High Reliability Storage Server



QNAP Certified

GRAND Series

Barebone

Software RAID Support



Grand Series is using pure software RAID created by operating system. Software RAID is default built-in function in Windows storage system and Windows 10. And it is also easy to access open source support from Linux operating system. The benefit of Software RAID is RAID array can be moved to a new computer with newer, faster CPU without capability constraint. Our powerful storage server system can enhance the read and write speeds incredibly.

Storage Expandable for Enterprise

The GRAND series storage server is a complete product line. The GRAND series created for enterprise storage supports processors with Celeron J4125, AMD steppe eagle and Ryzen embedded, and all servers are compliant with standard rackmount from 1U to 2U. This product line can meet various storage needs and enterprise applications. Storage capacity options from 4 bays to 12 bays are available to achieve your demands. All of our servers are expandable, allowing you to expand storage via SAS 12Gbps expansion card or USB 3.2 Gen 1 (5Gb/s) connector depending on different product lines.

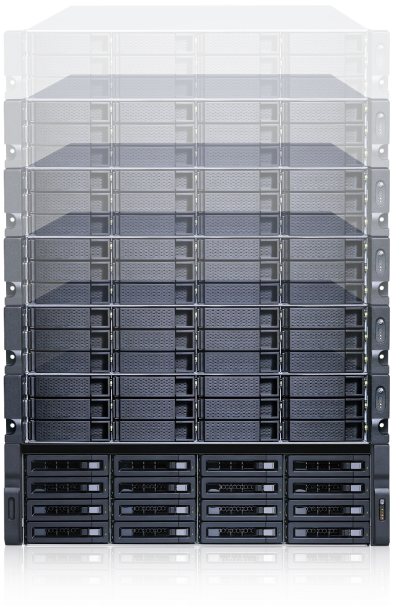

GRAND-RE

With its powerful AMD Ryzen™ V1000 series V1500B Quad-core processor, the GRAND-RE is capable of boosting virtual machine performance with up to 4 cores/8 threads at 2.2GHz. The GRAND-RE includes two 2.5GbE ports and a PCIe Gen 3 slot, providing you with fast network connectivity and the ability to add extra functionality and additional application potential. The GRAND-RE also features a redundant power supply to ensure maximum system uptime. Cutting-edge hardware integrated with comprehensive software solutions makes the GRAND-RE the preeminent choice to tackle resource-demanding applications and tasks.



Features

- AMD Ryzen™ Embedded V1500B quad-core 2.2 GHz processor
- 2 x DIMM Slots, up to 32 GB memory (2 x 16GB)
- Support one PCIe Gen3 x8 slot
- Storage expandable via USB port or HBA expansion card

Upgrade to 2.5GbE networking

The GRAND-RE comes with two 2.5GbE RJ45 LAN ports that allow you to use existing CAT5e cables to upgrade network speeds from 1 Gigabit to 2.5 Gigabit. 5GbE speeds can also be attained by using Port Trunking. To upgrade your laptops and desktops to take advantage of high-speed network.

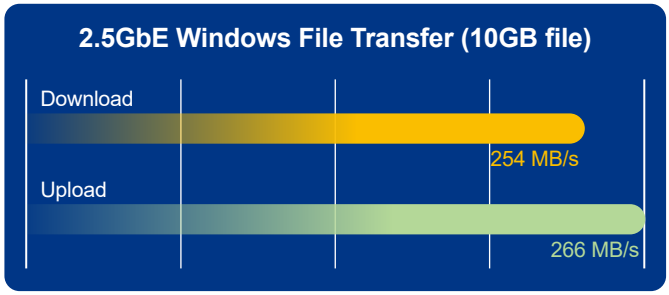

Extend Functionality with a PCIe Card

The GRAND-GL has a PCIe expansion slot, providing flexibility in extending storage server functionality and potential applications. Install a QNAP QM2 card to provide M.2 SSD caching/10GbE connectivity, or use the GRAND-GL as a wireless access point by installing a compatible wireless network card, or boost the USB connectivity of the GRAND-GL by installing a USB 3.2 Gen2 10Gbps card.

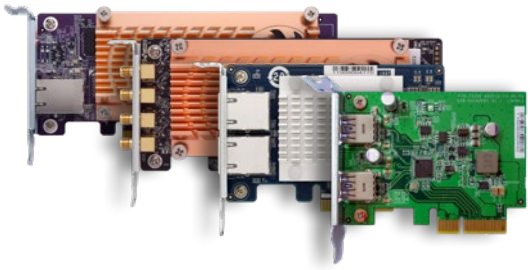

Specifications

Model	GRAND-RE-08B-RP	GRAND-RE-08B
CPU	AMD Ryzen™ Embedded V1500B quad-core 2.2 GHz processor	
Encryption Acceleration	AES-NI	
Memory	Maximum 32GB (2 x 16GB) 2 x Long-DIMM DDR4 For dual-DIMM configuration, you must use a pair of identical DDR4 modules.	
Drive Types	8 x 3.5"/2.5" SATA 6Gb/s HDDs/SSDs	
Gigabit LAN Port	2 x 2.5GbE LAN port	
PCIe Slot	1 x PCIe Gen 3 x8	
USB Ports	1 x USB 3.2 Gen1 Type-A port 2 x USB 3.2 Gen2 Type-C port 1 x USB 3.2 Gen2 Type-A port	
LED Indicator	Status/Power, LAN, USB, Drive 1 - 8	
Button	Power/Status, Reset	
Form Factor	2U Rackmount	
Dimension (H x W X D)	89 x 482 x 425 mm	
Net Weight	9.15 kg	8.04 kg
Operating temperature& Relative Humidity	0 to 40°C (32 to 104°F), 5 ~ 95% RH non-condensing, wet bulb: 27°C	
Power Supply	300W (x2), 100-240V AC, 50/60 Hz	250W, 100-240V AC, 50/60 Hz
Fan	2 x 80 mm, 12V DC	

Ordering Information

Part No.	Description
GRAND-RE-08B-R10	2U 8Bay front 3.5" HDD or SSD support, rackmount storage server system (Barebone), AMD Ryzen V1500B 4C 2.2GHz, 2x 2.5GbE, PCIe slots, 250W PSU
GRAND-RE-08B-RP-R10	2U 8Bay front 3.5" HDD or SSD support, rackmount storage server system (Barebone), AMD Ryzen V1500B 4C 2.2GHz, 2x 2.5GbE, PCIe slots, 2x 300W PSU

Options

Item	Order P/N	Description
RAM	79E00-G004-003-RS	4GB DDR4 RAM, 2400 MHZ, U-DIMM, 288-PIN
	79E00-G008-015-RS	8GB DDR4 RAM, 2400 MHZ, U-DIMM, 288-PIN
	79E00-G016-009-RS	16GB DDR4 RAM, 2400 MHZ, U-DIMM, 288-PIN
Rail kit	RAIL-B02	B02 series slide for 1U,2U chassis

Packing List

- Ethernet cable x 1
- Power cord x 2 (non RP model only one power cord)
- Flat head screws (for 2.5" HDD)
- Flat head screws (for 3.5" HDD)

GRAND-GL

Powered by an Intel® Celeron® J4125, quad-core 2.0 GHz processor, the GRAND-GL features two 2.5GbE RJ45 ports, providing up to 2.5 times the speed of Gigabit Ethernet and enabling smoother multimedia playback and everyday usage. With a PCIe Gen 2.0 x 2 slot, the GRAND-GL provides flexibility in extending NAS functionality, allowing you to install various cards for extra network ports, M.2 SSD caching/tiering, or Wi-Fi connectivity. The GRAND-GL ensures data security with AES 256-bit encryption, boosting system performance while ensuring the safety of sensitive business data stored.



Features

- Intel® Celeron® J4125 quad-core 2.0 GHz processor with AES-NI Encryption
- 2 x SODIMM Slots, up to 8GB memory with 2 x 4GB DIMMs
- 1 x PCIe x2 slot can support PCIe expansion card
- Storage expandable via USB 3.2 Gen1 port

Use the existing wiring infrastructure to support 2.5GbE

	CAT 5e	CAT 6	CAT 6A
100M	✓	✓	✓
1G	✓	✓	✓
2.5G	✓	✓	✓
5G	✓	✓	✓
10G	✗	✓ (55m)	✓



No more bandwidth restriction by 1GbE interface! No more DIY to install the 2.5GbE driver to your system from other venders!! GRAND-GL is equipped with 2 independent 2.5GbE NICs for faster and smoother multi-device networking experience. The available PCIe expansion slot is ready for the future business growth.

Accelerate IOPS performance with SSD Caching

Adding an SSD cache to the GRAND-RE is an easy way to increase IOPS performance and reducing storage volume latency. It is perfect for IOPS-demanding applications (including databases and virtualization) and can significantly improve overall workflows.



Specifications

Model	GRAND-GL-04A	GRAND-GL-04A-RP
CPU	Intel® Celeron® J4125 quad-core 2.0 GHz processor (burst up to 2.7 GHz)	
System memory	Memory Slots SODIMM x 2 (MAX. 8GB)	
PCIe Slot	1 x PCIe Gen 2 x2 slot	
Drive Trays	4	
Drive Types	SATA 6Gb/s, 3Gb/s HDD or SSD; Hot-swappable	
USB	2 x USB 2.0 (Rear) / 2 x USB 3.2 Gen 1	
LAN Ports	2 x 2.5GbE	
HDMI Output	1 x HDMI 1.4b	
LED Indicators	System Status, HDD, Expansion, LAN	
Buttons	Power, Reset	
Form Factor	1U, rack mountable	
Dimensions	43.3 (H) x 482.6 (W) x 483.9 (D) mm	
Net Weight	6.6 kg	8.12 kg
Temperature	0-40°C	
Relative Humidity	5~95% R.H.	
Power Supply	ATX 250W (single)	2 x ATX 250W (redundant)
Fan	2 x 40mm, 12V	

Ordering Information

Part No.	Description
GRAND-GL-04A-R10	1U 4Bay front 3.5" HDD or SSD support, rackmount storage server system (Barebone) with Intel® Celeron® J4125 4C 2.0GHz, 250W PSU
GRAND-GL-04A-RP-R10	1U 4Bay front 3.5" HDD or SSD support, rackmount storage server system (Barebone) with Intel® Celeron® J4125 4C 2.0GHz, 2 x 300W PSU

Options

Item	Order P/N	Description
RAM	79F00-G004-014-RS	4GB DDR4-2666, SO-DIMM, 260 PIN
Rail kit	RAIL-B02	B02 series slide for 1U,2U chassis

Packing List

- Ethernet cable x 1
- Power cord x 2 (non RP model only one power cord)
- Flat head screws (for 2.5" HDD)
- Flat head screws (for 3.5" HDD)

GRAND-SE

The GRAND-SE is a powerful network storage system powered by a high-performance AMD quad-core processor. It can support 10GbE network card, and doubles the encrypted file transfer performance with the AES-NI hardware-accelerated encryption engine to over 800 MB/s. The GRAND-SE is designed for small and medium-sized businesses looking for backup, restoration, private cloud, storage for virtualization, and to future-proof their IT infrastructure for 10GbE networks.



AMD EMBEDDED SOLUTIONS G SERIES X Quad-Core 2.0GHz

Features

- The power of 64-bit quad-core processor with AES-NI support
- 2 x SODIMM Slots, up to 16 GB memory with 2 x 8GB DIMMs
- Ready to support 10GbE network card
- Storage expandable via USB 3.2 Gen 1 (5Gb/s), up to 200TB

4GB DDR3L Max. 16GB RAM | 2.5" 3.5" SATA 6Gb/s | x4 Quad Gbe Ports | 10GbE SFP+ Port SFP+ 10GbE | AES-NI | Storage Expansion | Redundant Single PSU

Speedy transfer and hardware-accelerated encryption with AES-NI

The GRAND-SE is equipped with an energy-efficient 64-bit AMD quad-core 2.0GHz processor with maximum 16GB, SATA 6Gb/s, support one SFP+ 10GbE and four Gigabit LAN ports for lightning-fast multi-tasking performance with SSD cache support. The GRAND-SE is a powerful storage server that delivers up to 1,059 MB/s sequential read throughput with expanding one 10GbE configuration. The GRAND-SE's hardware-accelerated encryption engine provides unmatched encryption performance in its class, up to 822 MB/s with AES-256 bit full storage server volume encryption, boosting system performance & security while ensuring the safety of sensitive business data stored in the GRAND-SE.

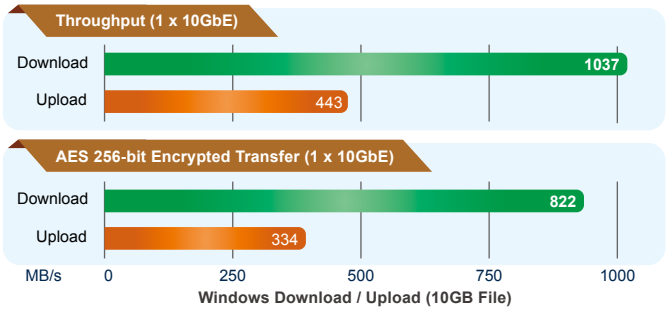

Specifications





Model	GRAND-SE-04A	GRAND-SE-04A-RP	GRAND-SE-08B	GRAND-SE-08B-RP	GRAND-SE-12B	GRAND-SE-12B-RP
CPU	64-Bit Quad-Core AMD® G-Series 2.0GHz					
Memory	Total memory slots: 2 SODIMM; Memory expandable up to 16GB DDDR3L (8GB x 2)					
Max. HDDs/SSDs	4		8		12	
HDDs/SSDs Type	2.5" or 3.5" SATA 6Gb/s, 3Gb/s; hot-swappable					
Expansion Unit Support	Max. 1 expansion unit					
LAN Ports	4 x GbE ports					
USB Ports	USB 3.2 Gen 1 (5Gb/s): 2, USB 2.0: 3		USB 3.2 Gen 1 (5Gb/s): 2, USB 2.0: 2		USB 3.2 Gen 1 (5Gb/s): 2, USB 2.0: 2	
PCIe Slot	1 x PCIe 2.0 x 4 slot					
LED Indicators	Status, LAN, USB, HDD1-4		Power, Status, LAN, USB, HDD1-8		Power, Status, LAN, USB, HDD1-12	
Buttons	Power, Reset, USB Auto Copy		Power, Reset		Power, Reset	
Form Factor	1U Rackmount		2U Rackmount		2U Rackmount	
Dimensions (HxWxD)	1.73 x 17.28 x 19.65 inch		89 x 482 x 534 mm / 3.50 x 18.97 x 21.02 inch			
Weight (Net/Gross)	7.63 / 11.60 kg 16.82 / 25.57 lb		11.02 / 19.26 kg 24.29 / 42.46 lb		16.14 / 19.41kg 35.58 / 41.84 lb	
Temperature and Humidity	0-40°C, 5~95% RH non-condensing, wet bulb: 27°C					
Power Supply Specification	Input: 100-240V AC, 50/60Hz; Output: 250W					
	250W	2 x 250W	250W	2 x 250W	250W	2 x 250W

Ordering Information

Part No.	Description
GRAND-SE-04A-R10	1U 4Bay front 3.5" HDD or SSD support, rackmount storage server system (Barebone) with AMD GX-424CC, 250W single PSU, RoHS
GRAND-SE-04A-RP-R10	1U 4Bay front 3.5" HDD or SSD support, rackmount storage server system (Barebone) with AMD GX-424CC, 250W redundant PSU, RoHS
GRAND-SE-08B-R10	2U 8Bay front 3.5" HDD or SSD support, rackmount storage server system (Barebone) with AMD GX-424CC, 250W single PSU, RoHS
GRAND-SE-08B-RP-R10	2U 8Bay front 3.5" HDD or SSD support, rackmount storage server system (Barebone) with AMD GX-424CC, 250W redundant PSU, RoHS
GRAND-SE-12B-R10	2U 12Bay front 3.5" HDD or SSD support, rackmount storage server system (Barebone) with AMD GX-424CC, 250W single PSU, RoHS
GRAND-SE-12B-RP-R10	2U 12Bay front 3.5" HDD or SSD support, rackmount storage server system (Barebone) with AMD GX-424CC, 250W redundant PSU, RoHS

*Pre-install Memory by Request

Options

Item	Order P/N	Description
Network card	LAN-10G2SF-MLX	Dual-port 10GbE SFP+ network expansion card
Network card	LAN-10G2T-X550	Dual-port 10GbE 10GBASE-T network expansion card
Rail kit	RAIL-B02	B02 series slide for 1U,2U chassis

Packing List

Ethernet Cable x 2	Flat head screws (for 2.5" HDD)
Power cord x 2 (non RP model only one power cord)	Flat head screws (for 3.5" HDD)

Automatic Identification and Data Capture (AIDC) Technology

Near Field Communication (NFC) Technology



■ Comparison of Short-range Communication Technologies

Technology	Standard	Frequency	Range	Data Rate
RFID	ISO 10536	13.56 MHz	0~2 mm	9.6 Kbps
	ISO 14443	13.56 MHz	0~10 cm	106, 212, 424 Kbps
	ISO 15693	13.56 MHz	0~70 cm	26 Kpbs
NFC	ECMA-340, 352, 356, ISO/IEC 18092, 2148, 1ETSI TS 102 190	13.56 MHz	0~20 cm	106, 212, 424 Kbps
Infrared	IrFM	405 THz-300 GHz	20 cm~30 cm low power to 1 m~2 m	9.6 Kbps~4 Mbps
Bluetooth	Bluetooth V4.0	2.4 GHz	10 m-100 m	720 Kbps

- NFC, as an open platform technology, is standardized in the NFC Forum, which was found by Philips (MIFARE®), Sony (FeliCa™), Samsung and Nokia.
- NFC is based on and the extension of RFID. It operates on 13.56 MHz frequency and is compatible with today's field proven contactless MIFARE® and FeliCa™ smart cards
- NFC communication range is up to 10 cm.
- NFC standard supports different data transmission rates such as 106 kbps, 212 kbps, and 424 kbps.

■ Three NFC Application Families

The Near Field Communication (NFC) extends the RFID technology, and utilizes the 13.56MHz frequency to communicate and exchange data between devices which are in close proximity (less than 10cm) to each other. Popular applications include payment, gaming, and social networking (e.g. mobile gaming and device-to-device communication).



Radio Frequency Identification (RFID)

The RFID technology uses radio frequency as a data transmission intermediary. It can be classified by the frequency band the RFID system adopts since different frequencies will result in different physical attributes.

Frequency band	Operating range*	Applications	Benefits	Drawbacks
LF, < 135KHz	< 0.5m	• Access control • Product authentication • Animal tracking	Works well around water and metal	• Short read range • Slower read rate
HF, 13.56MHz	< 1m	• Smart cards • Airline baggage • Library books	Low cost	Higher read rate than LF
UHF 860MHZ to 930MHz	< 4m	• Pallet tracking • Parking lot access • Carton tracking	EPC standard built around this frequency	Does not work with items of high water or metal content
Microwave 2.4GHZ	< 1m	• Airline baggage • Electronic toll collection	Most expensive	Fastest read rates

* The operating range depends on reader power and operating environment

■ HF RFID and NFC Supported Models






	AFOKAR-08A	IOVU-210AD-RK39	IOVU-210AR-RK39	MODAT-550A
Size	8”	10.1”	10.1”	5.5”
Protocols supported	•Supports ISO/IEC 14443A Reader/Writer mode up to 848 kbit/s •Supports ISO/IEC 14443B Reader/Writer mode up to 848 kbit/s •Supports contactless communication according to the FeliCa™ protocol at 212 kbit/s and 424 kbit/s •Supports MIFARE® encryption •Typical operating distance in Read/Write mode for communication to ISO/IEC 14443A/MIFARE®, ISO/IEC 14443B cards up to 50 mm depending on antenna size and tuning			•Reader Features (106k-848Kbits/s) -Support ISO 15693-Support ISO14443A -Support NFC Forum Type 1-4 Tag •Card Emulation Mode (106K-848Kbits/s) (optional) -Support ISO 14443A -Support NFC Forum Type 1-4 Tag -Support MIFARE® via CLT •Near Field Communication (106K-424Kbits/s) -Peer to Peer Active/Passive mode -ISO 18092 compliant




	AFL3 Series	POCi-W22C-ULT5
Size	7” ~ 22”	22”
Protocols supported	• ISO/IEC 14443-A and B, MIFARE • JIS X 6319-4 (comparable with FeliCa scheme) • ISO/IEC 15693, ICODE, ISO/IEC 18000-3 mode 3	• NFC protocols - tag reader/writer, P2P • ISO/IEC 14443- type A card emulation • EMVCo compliance

1D/2D Barcode Capability

■ Mobile Barcode Reading

The embedded Honeywell or Motorola scan engine, which is a decoded miniature area imaging scan engine designed to scan 1D and 2D barcodes, features a megapixel imaging sensor, a wide angle lens design, the integration of illumination and aiming function, and an industrial leading decoding software to deliver fast and aggressive scanning performance.

- Accurately decodes all 1D and 2D codes, even wrinkled, damaged or poorly printed
- Large scanning area
- Fast scan rate




Technology	1D Barcode	2D Barcode
Reading Condition	20 to 25 characters	100 to about 2,000 characters
Symbologies	EAN/UPC, RSS, Code 39, Code 128, UCC/EAN 128, ISBN, ISBT, Interleaved, Matrix, Industrial and Standard 2 of 5, Codabar, Code 93/93i, Code 11, MSI, Plessey, Telepen, postal codes.	Data Matrix, PDF417, Micro PDF 417, Maxicode, QR, Aztec, EAN.UCC composite

MODAT-550A

Mobile Data Collector



Features

- 1.5m drop survival and IP 65 protection
- Octa-core 64-bit Cortex-A53 1.5 GHz processor
- 5.5” display PDA
- Optional GSM (850, 900, 1800, 1900)
  WCDMA (Band 1, 2, 5, 8)
  TDS-CDMA (Band 34, 39)
  LTE FDD (Band 1, 2, 3, 4, 5, 7, 8, 20)
  TDD (Band 38, 39, 40, 41b)
- Micro USB port and microSD card slot (max. 64 GB) for maximum connectivity
- Android 7.0 OS
- 1D/2D imager scan engine
- NFC (device to device communication, card reader).



Specifications

Model		MODAT-550A-OA53-R10	MODAT-550A-OA53-ET-R10
Display	LCD size	5.5”	
	Brightness (cd/m²)	300 cd/m²	
	Max. Resolution	1080 x 1920 (Full HD)	
	Viewing Angle	80/80/80/80 Deg.	
	Touchscreen	5-point capacitive	
System	CPU	Octa-core 64-bit Cortex-A53 1.5 GHz processor	
	Operating System	Android 7.0	
	Memory	16GB eMMC 2GB LPDDR3	
	Storage	microSD slot up tp 64GB	
Communication	Wi-Fi	802.11a/b/g/n	
	Bluetooth	4.0 LE	
	Modem (Optional)	GSM (850, 900, 1800, 1900) WCDMA (Band 1, 2, 5, 8) TDS-CDMA (Band 34, 39) LTE FDD (Band 1, 2, 3, 4, 5, 7, 8, 20) TDD (Band 38, 39, 40, 41b)	
	GPS	GPS/Glonass	
Data Collection	NFC	Yes	
	Barcode	1D/2D imager scan engine	N/A
	Camera	13-megapixel AF rear camera	
Indicators & Buttons	LED Indicators	Green/Red	
I/O Interface	Audio	1 x 0.5W speaker 1 x Headset/Mic-in	
	USB	1x High-speed Micro USB 2.0 OTG	
Power	Power Adapter	5V/3A	
	Battery	4000 mAh	
Enviroments	Operating Temperature	-10°C ~ 50°C	
	Storage Temperature	-20°C ~ 60°C	
	Humidity	10% ~ 95%, non condensing	
	Drop Survival	1.5m	
	Environmental Protection	IP 65	
Physical	Dimensions (L x W x H)	160.9 mm x 85.4 mm x 28.85 mm	
	Weight	Under 380g	

Ordering Information

Part No.	Description
MODAT-550A-OA53-R10-TW	5.5" Android 7.0 PDA with Octa-Core Cortex-A53 1.5GHz, 802.11 a/b/g/n WiFi, 4.0 LE Bluetooth, (GSM, 3G, LTE), GPS, 13M pixel camera, 1D/2D barcode, 2GB LPDDR3, 16GB eMMC, NFC, TW reg, RoHS
MODAT-550A-OA53-R10-CN	5.5" Android 7.0 PDA with Octa-Core Cortex-A53 1.5GHz, 802.11 a/b/g/n WiFi, 4.0 LE Bluetooth, (GSM, 3G, LTE), GPS, 13M pixel camera, 1D/2D barcode, 2GB LPDDR3, 16GB eMMC, NFC, CN reg, RoHS
MODAT-550A-OA53-R10-EU	5.5" Android 7.0 PDA with Octa-Core Cortex-A53 1.5GHz, 802.11 a/b/g/n WiFi, 4.0 LE Bluetooth, (GSM, 3G, LTE), GPS, 13M pixel camera, 1D/2D barcode, 2GB LPDDR3, 16GB eMMC, NFC, EU reg, RoHS
MODAT-550A-OA53-R10-US	5.5" Android 7.0 PDA with Octa-Core Cortex-A53 1.5GHz, 802.11 a/b/g/n WiFi, 4.0 LE Bluetooth, (GSM, 3G, LTE), GPS, 13M pixel camera, 1D/2D barcode, 2GB LPDDR3, 16GB eMMC, NFC, US reg, RoHS
MODAT-550A-OA53-ET-R10-TW	5.5" Android 7.0 PDA with Octa-Core Cortex-A53 1.5GHz, 802.11 a/b/g/n WiFi, 4.0 LE Bluetooth, (GSM, 3G, LTE), GPS, 13M pixel camera, 2GB LPDDR3, 16GB eMMC, NFC, TW reg, RoHS
MODAT-550A-OA53-ET-R10-CN	5.5" Android 7.0 PDA with Octa-Core Cortex-A53 1.5GHz, 802.11 a/b/g/n WiFi, 4.0 LE Bluetooth, (GSM, 3G, LTE), GPS, 13M pixel camera, 2GB LPDDR3, 16GB eMMC, NFC, CN reg, RoHS
MODAT-550A-OA53-ET-R10-EU	5.5" Android 7.0 PDA with Octa-Core Cortex-A53 1.5GHz, 802.11 a/b/g/n WiFi, 4.0 LE Bluetooth, (GSM, 3G, LTE), GPS, 13M pixel camera, 2GB LPDDR3, 16GB eMMC, NFC, EU reg, RoHS
MODAT-550A-OA53-ET-R10-US	5.5" Android 7.0 PDA with Octa-Core Cortex-A53 1.5GHz, 802.11 a/b/g/n WiFi, 4.0 LE Bluetooth, (GSM, 3G, LTE), GPS, 13M pixel camera, 2GB LPDDR3, 16GB eMMC, NFC, US reg, RoHS

Optional Accessory List

Item	Part No.	Description
Cradle	MODAT-531A-CR01-R10	charging cradle
Standard Pouch	7Z000-MODAT531APOUCH	pouch, black

Packing List

Item	Part No.	Q'ty
USB Cable	32001-014300-100-RS	1
AC-DC Adapter	63040-480015-001-RS	1
Hand Strap	46035-000300-RS	1

Cradle Specification

Model		Description
I/O Interface	DC Input	1 x Micro USB jack
Power	Power Supply	5V/3A
Environment	Operating Temperature	-10°C ~ 50°C
	Storage Temperature	-20°C ~ 60°C
	Humidity	10% ~ 95% non condensing
Physical Characteristics	Dimensions (LxWxH) (mm)	115.0 x 66.0 x 50.4
	Weight	194 g



Standard Pouch



Cradle



Light Industrial Panel Solution



Today, more and more customers are looking for advanced services such as round-the-clock service or just-in-time delivery. Service automation enables the exchange of information and communication between administrators and clients through the thin, low power consumption portable devices that fit with many circumstances. Upgrade your service platform with IEI service automation solutions, which have advanced communication functions and solid mechanical characteristics. These solutions help you keep up with your customers while staying a step ahead of the competition.

Light Industrial Panel PC Product Line

AFOLUX GEN III Panel PC with PoE PD module

Size	W7”	W10.1”	12.1”	W15.6”	18.5”	21.5”
Intel® Apollo lake	ALF3-W07A-AL AFL3-W07A-AL2	AFL3-W10A-AL	AFL3-12A-AL	AFL3-W15A-AL		
Intel® Whiskey Lake				AFL3-W15C-ULT5	AFL3-W19C-ULT5	AFL3-W22C-ULT5

AFOLUX GEN III Panel PC

Size	W7”	8.4”	W10.1”	12.1”	W15”	W19”	W22”
Intel® Dual Core Celeron® N2807	AFL3-W07A-BT						
Intel® Quad Core Celeron® J1900		AFL3-08A-BT	AFL3-W10A-BT	AFL3-12A-BT	AFL3-W15A-BT		
6th generation Intel® mobile ULT				AFL3-12C-ULT3	AFL3-W15C-ULT3	AFL3-W19C-ULT3	AFL3-W22C-ULT3
Intel® Apollo lake						AFL3-W19A-AL	

AFOLUX GEN II Panel PC

Size	12.1”
Intel® Atom™ HM65	AFL2-12A-HM65

Intelligent PoE Management System



AFL3 Series Products support up to IEEE 802.3bt standard and IEI offer PoE PD bt standard module to option install to AFL3 series panel pc.

Type	Standard	PSE minimum input power	PD minimum input power guaranteed	Cable category	Cable length	Power over
Type 1	IEEE802.3af	15.4 W	12.95 W	Cat5e	100 m	2 pairs
Type 2	IEEE802.3at	30 W	25.5 W	Cat5e	100 m	2 pairs
Type3	IEEE802.3bt	60 W	51 W – 60 W	Cat5e	100 m	2 pairs class 0-4 4 pairs class 0-4 4 pairs class 5-6
Type4	IEEE802.3bt	90 W	71 W – 90 W	Cat5e	100 m	4 pairs class 7-8

Application

PoE Scenario (Delivery Data and Power Together Thru Ethernet cable) PoE allows electronic devices to receive both power and data through one Ethernet plug-in. The ability to receive both power and data through one cord means less cabling and less cost for the factory automation

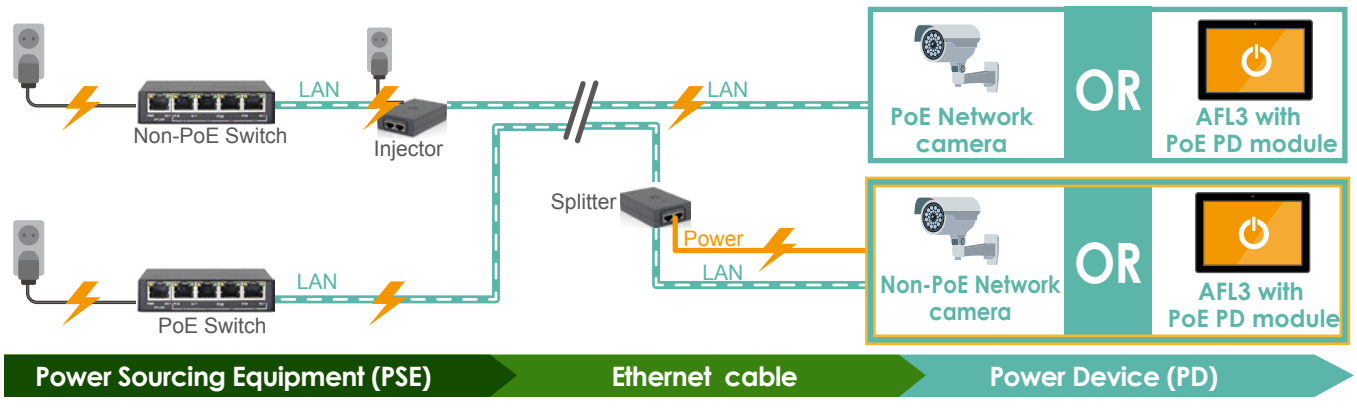

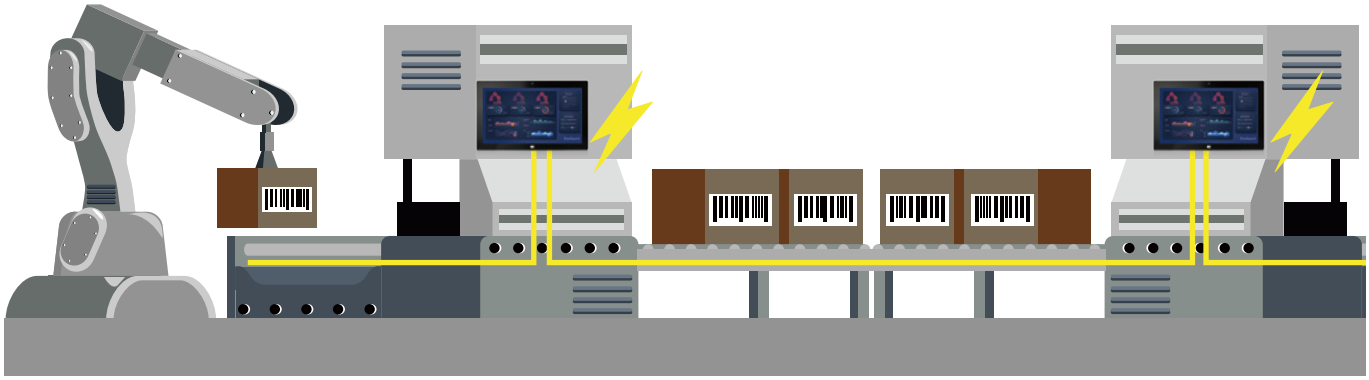

Setup Intelligent PoE Management System

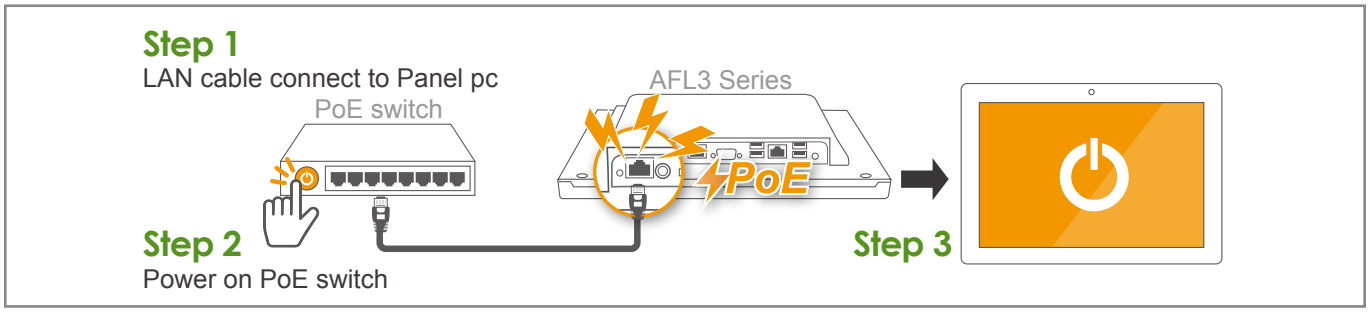

IEI AFL3 PoE Product Support List

The AFL3 series uses DC adapter as a default to connect with power source. The following PoE PD modules provide additional options for powering up the system.

Item	System power consumption (Watts)		IEEE802.3 PD module (Power device)			IEEE802.3 PSE switch (Power sourcing equipment)	
	MAX Load	Idle	AFL3-PD-BT01-KIT01 input power 71~90W	GPOE-PD-AT01 input power 25.5W	GPOE-PD-BT01 input power 71~90W	IEEE802.3at switch Output power 30W	IEEE802.3bt switch Output power 90W
AFL3-W07A-AL*	32.35	12.28	n/a	on board	n/a	V	V
AFL3-W07A-AL2*	32.35	12.28	n/a	on board	n/a	V	V
AFL3-W10A-AL*	33.66	16.37	V	n/a	n/a	V	V
AFL3-12A-AL	43.1	25.57	V	n/a	n/a	n/a	V
AFL3-W15A-AL	42.59	24.46	V	n/a	n/a	n/a	V
AFL3-W15C-ULT5*	60.9	19.72	n/a	V	V	V	V
AFL3-W19C-ULT5*	58.67	17.93	n/a	V	V	V	V
AFL3-W22C-ULT5*	58.92	20.495	n/a	V	V	V	V

*The maximum load power consumption of the system exceeds the output power range of the PSE at switch; therefore, it is suggested to connect only lower-power devices (such as keyboard, mouse, UFD or card reader) to the USB ports.



Two PoE PD module to do power Load sharing 25.5W + 25.5W = 51W

Customers who is unable to upgrade their PSE switch to IEEE802.3bt standard can simply upgrade the WHL-U panel PC by installing IEI's GPOE-PD-AT01 module, and power the device with two IEEE802.3at standard PSE ports

AFL3 Apollo Lake with PoE Selection Guide

New



LCD Size		7”		10.1”	12.1”	15.6”
Model		AFL3-W07A-AL	AFL3-W07A-AL2	AFL3-W10A-AL	AFL3-12A-AL	AFL3-W15A-AL
LCD	Size	7”		10.1"	12.1"	15.6"
	Resolution	1024 x 600 (16:9)		1280 x 800 (16:10)	1024 x 768 (4:3)	1366 x 768 (16:9)
	Brightness (cd/m²)	500		350	500	300
	Contrast Ratio	700:1		800:1	700:1	500:1
	Viewing Angle (H-V)	150 / 145		170 / 170	160 / 160	170 / 160
	Backlight MTBF	20000		15000	50000	50000
Touch	Touch Screen	PCAP with USB interface (anti-UV/AG coating)		PCAP with USB interface (anti-UV/anti-glare coating)		
	Touch Controller	EETI 80H60		EXC3146	EXC3146	EXC3160
Mainboard	CPU	Intel® Celeron N3350 (2M Cache, up to 2.4 GHz) TDP 6W		Apollo lake Intel® Celeron® Processor J3455 (2M Cache, up to 2.3 GHz) TDP 10W		
	RAM	one 204-pin 1866MHz DDR3L DIMMs support up to 8GB				
	Ethernet	LAN1: Intel® I211 + LAN2: Intel® I211	LAN1: Intel® I211	LAN1: Intel® I211 + LAN2: Intel® I211		
	Audio Codec	ALC888S				
Storage		1 x M.2 B+M key 2242 slot (USB/SATA signal)		1 x M.2 B+M key 2242 slot (USB/SATA signal)	*1 x 2.5” SATA 3Gb/s HDD bay (optional one of the two) 1 x M.2 B+M key 2242 slot (USB/SATA signal)	
I/O Ports & Switch		2 x GbE LAN 2 x USB 3.2 Gen 1 (5Gb/s) 1 x 12V DC Jack 1 x power switch 1 x Reset button 1 x Clear CMOS button 1 x AT/ATX switch			1 x RS-232/422/485 by RJ45 1 x RS-232 by DP9 2 x GbE LAN 2 x USB 3.2 Gen 1 (5Gb/s) 2 x USB 2.0 1 x HDMI output 1 x 9V~30V DC Jcak 1 x power switch 1 x Line out 1 x Reset button 1 x Clear CMOS button 1 x AT/ATX switch	
E-Window expanasion		N/A		N/A	Yes (option)	Yes (option)
PoE IEEE802.3bt		On board PoE at		Yes (option single channel)		
Audio		AMP 2W (internal speaker)		AMP 2W + 2W	AMP 3W + 3W (internal speaker)	AMP 3W + 3W (internal speaker)
Camera / Microphone		N/A		2-megapixel with low light function, digital microphone		
Wireless & Bluetooth		IEEE 802.11 a/b/g/n/ac, Bluetooth V4.2 (1 x M.2 A + E key 2230)				
Physical	Construction Front Panel	PC + ABS Plastic				
	Mounting	Panel, Wall, Stand and Arm VESA 75mm x 75mm			Panel, Wall, Stand and Arm VESA 75mm x 75mm, 100mm x 100mm	
	Color	Black C				
	Dimensions (W x H x D)(mm)	191 x 127 x 43		262 x 181 x 42	304 x 243 x 44	396 x 250 x 53
	Cut-out Dimensions (W x H)	182 x 111		236 x 149	243 x 205	273 x 226
	Net/Gross Weight (kgs)	0.73/1.81		1.06/2.58	1.92/3.95	3.3/5.6
Environment	Operating Temperature (°C) (Ambient with air flow)	minus -20°C~50°C				
	Storage Temperature (°C)	minus -20°C~60°C				
	Humidity	10% to 95% (non-condensing)				
	IP Level	IP 65 compliant front panel		IP 64 compliant front panel		
	Safety&EMC	CE / FCC class A				
	Thermal Solution	Fanless				
Power	Power Requirement	12V only		9V~30V		
ErP		ErP 2009/125/EC				

AFL3 Apollo Lake with PoE

Intelligent PoE Management System

Features

- W7” light industrial interactive panel PC
- 12V DC input with lockable DC jack
- Selectable AT/ATX power mode
- Built-in speakers
- Support PoE PD IEEE803.2 af/at
- IP65 compliant front panel
- Touch screen with anti-UV / anti-glare coating
- Support Auto Flow Control over RS-485



Intel® Apollo lake | Fanless | PoE | Touchscreen | Anti-glare Coating

Specifications

New

Model		AFL3-W07A-AL	AFL3-W07A-AL2
LCD	Size	7”	
	Resolution	1024 x 600 (16:9)	
	Brightness (cd/m²)	500	
	Contrast Ratio	700:1	
	Viewing Angle (H-V)	150 / 145	
	Backlight MTBF	20000	
Touch	Touch Screen	PCAP with USB interface (anti-UV/AG coating)	
	Touch Controller	EETI 80H60	
Mainboard	CPU	Intel® Celeron N3350 (2M Cache, up to 2.4 GHz) TDP 6W	
	RAM	one 204-pin 1866MHz DDR3L DIMMs support up to 8GB	
	Ethernet	LAN1: Intel® I211 + LAN2: Intel® I211	LAN1: Intel® I211
	Audio Codec	ALC888S	
Storage		1 x M.2 B+M key 2242 slot (USB/SATA signal)	
I/O Ports & Switch		2 x GbE LAN 2 x USB 3.2 Gen 1 (5Gb/s) 2 x USB 2.0 1 x 12V DC Jack 1 x power switch 1 x Reset button 1 x Clear CMOS button 1 x AT/ATX switch	1 x GbE LAN 2 x USB 3.2 Gen1 (5Gb/s) 1 x RS232/422/485 (by DB9) 1 x HDMI 1 x 12 DC Jack 1 x power switch 1 x Reset button 1 x Clear CMOS button 1 x AT/ATX switch
PoE IEEE802.3 standard		On board PoE at	
Audio		AMP 2W (internal speaker)	
Wireless & Bluetooth		IEEE 802.11 a/b/g/n/ac, Bluetooth V4.1 M.2 slot A+E key 2230 slot (PCIe/USB signal)	
Physical	Construction Front Panel	PC + ABS Plastic	
	Mounting	Panel, Wall, Stand and Arm VESA 75mm x 75mm	
	Color	Black C	
	Dimensions (W x H x D)(mm)	191 x 127 x 43	
	Cut-out Dimensions (W x H)	182 x 111	
	Net/Gross Weight (kgs)	0.73/1.81	
Environment	Operating Temperature (°C) (Ambient with air flow)	minus -20˚C~50˚C	
	Storage Temperature (°C)	minus -20˚C~60˚C	
	Humidity	10% to 95% (non-condensing)	
	IP Level	IP 65 compliant front panel	
	Safety&EMC	CE / FCC class A	
	Thermal Solution	Fanless	
Power	Power Requirement	12V/3A	
ErP		ErP 2009/125/EC	

AFL3 Apollo Lake with PoE

Intelligent PoE Management System

Features

- W7"~ W15.6" light industrial interactive panel PC
- 9 V ~ 30 V wide range DC input with lockable DC jack
- Selectable AT/ATX power mode
- Built-in speakers
- Support PoE PD IEEE803.2 af/at/bt
- IP64/IP65 compliant front panel
- Touch screen wth anti-UV / anti-glare coating
- Support Auto Flow Control over RS-485



Intel® Apollo lake | Fanless | PoE | Touchscreen | Anti-glare Coating | 9V~30V DC

Specifications

Model		AFL3-W10A-AL	AFL3-12A-AL	AFL3-W15A-AL
LCD	Size	10.1"	12.1"	15.6"
	Resolution	1280 x 800 (16:10)	1024 x 768 (4:3)	1366 x 768 (16:9)
	Brightness (cd/m²)	350	500	300
	Contrast Ratio	800:1	700:1	500:1
	Viewing Angle (H-V)	170 / 170	160 / 160	170 / 160
	Backlight MTBF	15000	50000	50000
Touch	Touch Screen	PCAP with USB interface (anti-UV/anti-glare coating)		
	Touch Controller	EXC3146	EXC3146	EXC3160
Mainboard	CPU	Apollo lake Intel® Celeron® Processor J3455 (2M Cache, up to 2.3 GHz) TDP 10W		
	RAM	one 204-pin 1866MHz DDR3L DIMMs support up to 8GB		
	Ethernet	LAN1: Intel® I211 + LAN2: Intel® I211		
	Audio Codec	ALC888S		
Storage		1 x M.2 B+M key 2242 slot (USB/SATA signal)	*1 x 2.5" SATA 3Gb/s HDD bay (optional one of the two) 1 x M.2 B+M key 2242 slot (USB/SATA signal)	
I/O Ports & Switch		1 x RS-232/422/485 by RJ45 (Support Auto Flow Control over RS-485) 1 x RS-232 by DP9 2 x GbE LAN 2 x USB 3.2 Gen 1 (5Gb/s) 2 x USB 2.0 1 x HDMI output 1 x 9V~30V DC Jack 1 x power switch 1 x Line out 1 x Reset button 1 x Clear CMOS button 1 x AT/ATX switch		
E-Window expanasion		N/A	Yes , optional 1 x M.2 B+M key 2242 slot (USB/SATA signal)	
PoE IEEE802.3 standard		Yes (option single channel)		
Audio		AMP 2W + 2W	AMP 3W + 3W (internal speaker)	
Camera / Microphone		2-megapixel with low light function, digital microphone		
Wireless & Bluetooth		IEEE 802.11 a/b/g/n/ac, Bluetooth V4.1 M.2 slot A+E key 2230 slot (PCIe/USB signal)		
Physical	Construction Front Panel	PC + ABS Plastic		
	Mounting	Panel, Wall, Stand and Arm VESA 75mm x 75mm	Panel, Wall, Stand and Arm VESA 75mm x 75mm, 100mm x 100mm	
	Color	Black C		
	Dimensions (W x H x D)(mm)	262 x 181 x 42	304 x 243 x 44	396 x 250 x 53
	Cut-out Dimensions (W x H)	236 x 149	243 x 205	273 x 226
	Net/Gross Weight (kgs)	1.06/2.58	1.92/3.95	3.3/5.6
Environment	Operating Temperature (°C) (Ambient with air flow)	minus -20˚C~50˚C		
	Storage Temperature (°C)	minus -20˚C~60˚C		
	Humidity	10% to 95% (non-condensing)		
	IP Level	IP 64 compliant front panel		
	Safety&EMC	CE / FCC class A		
	Thermal Solution	Fanless		
Power	Power Requirement	9~30V , 4~1,2A	9~30V , 6.67~2A	9~30V , 6.67~2A
ErP		ErP 2009/125/EC		

*the 2.5" HDD bay must be removed if one chooses to install the PoE PD module, and vice versa

Ordering Information

Part No.	Description
AFL3-W07A-AL-N1/P/PC/4G-R10	7" 500cd/m² 1024 x 600 Panel PC with Intel® Celeron® Processor N3350 (6W) on-board Processor , on-baord POE at, 1*4GB DDR3L , 802.11a/b/g/n/ac WiFi module, PCAP touch, R10
AFL3-W07A-AL2-N1/P/PC/4G-R10	7" 500cd/m² 1024 x 600 Panel PC with Intel® Celeron® Processor N3350 (6W) on-board Processor , w/COM , on-baord POE at, 1*4GB DDR3L , WiFi module, PCAP touch, R10
AFL3-W10A-AL-J2/P/PC/4G-R10	10.1" 350cd/m² 1280 x 800 Panel PC with Intel® Celeron® Processor J3455 (10W) on-board Processor, POE option, 1*4GB DDR3L , 802.11a/b/g/n/ac WiFi module, PCAP touch, 2M camera, microphone, R10
*AFL3-12A-AL-J2/P/PC/4G-R10	12.1"500 cd/m² 1024 x 768 Panel PC with Intel® Celeron® Processor J3455 (10W) on-board Processor, POE option, 1*4GB DDR3L , 802.11a/b/g/n/ac WiFi module, PCAP touch, 2M camera, microphone, R10
*AFL3-W15A-AL-J2/P/PC/4G-R10	Wide 15.6" 300 cd/m² 1366 x 768 Panel PC with Intel® Celeron® Processor J3455 (10W) on-board Processor, POE option, 1*4GB DDR3L , 802.11a/b/g/n/ac WiFi module, PCAP touch, 2M camera, microphone, R10
AFL3-PD-BT01-KIT01-R10	PoE PD IEEE802.3 af/at/bt module kit , only for AFL3-xxx-AL optional (W10A/12A/W15A), R10

*the 2.5" HDD bay must be removed if one chooses to install the PoE PD module, and vice versa

Options

Item	AFL3-W07A-AL	AFL3-W07A-AL2	AFL3-W10A-AL	AFL3-12A-AL	AFL3-W15A-AL
Panel Mounting Kit	AFL3PK-W07A-R11	AFL3PK-W07A-R11	AFL3PK-08A-R10	AFL3PK-08A-R10	AFL3PK-W15A-R10
Wall Mounting Kit	AFLWK-12	AFLWK-12	AFLWK-12	AFLWK-19B	AFLWK-19B
Rack Mounting Kit	AFL3RK-W07A-R11	AFL3RK-W07A-R11	AFL3RK-W10A-R10	AFL3RK-12A-R10	AFL3RK-W15A-R11
Arm	ARM-11-RS/ARM-31-RS	ARM-11-RS/ARM-31-RS	ARM-11-RS/ARM-31-RS	ARM-11-RS/ARM-31-RS	ARM-11-RS/ARM-31-RS
Stand	STAND-B08/STAND-100-RS	STAND-B08/STAND-100-RS	STAND-C12-R10	STAND-A12-RS/STAND-C12-R10/ STAND-100-RS	STAND-A12-RS/STAND-C12-R10/ STAND-100-RS
V-Stand	VSTAND-A07-R1	VSTAND-A07-R1	VSTAND-A10-R11	VSTAND-A12-R11	
Magnetic Card Reader	AFL3P-W7MSR-U-R10	AFL3P-W7MSR-U-R10	AFL3P-W10MSR-U-R10	AFL3P-W10MSR-U-R10	AFL3P-W10MSR-U-R10
Barcode Scanner	N/A	N/A	AFL3-2D-R11	AFL3-2D-R11	AFL3-2D-R11
RFID Reader (13.56 MHz Mifare Type)	N/A	N/A	AFL3-MF-RFID-KIT03-R10	AFL3-MF-RFID-KIT03-R10	AFL3-MF-RFID-KIT03-R10
OS: Win 10 IOT Enterprise (64-bit)	AFL3-W07A-AL-W10E64-E-R10				
PoE PD module	N/A	N/A	AFL3-PD-BT01-KIT01-R10	AFL3-PD-BT01-KIT01-R10	AFL3-PD-BT01-KIT01-R10

Packing List

Item	Part No.	Q'ty	Remark
Setting kit	46003-002600-RS	2	
Round head machine screw	44003-020041-RS	2	M2*4 round head machine screw
	44003-020041-RS	4	M2*4 round head machine screw
Pan head machine screw	44403-040061-RS	4	M4*6 pan head machine screw
Fix holder	46003-009500-RS	2	
Power cord	32702-000400-200-RS	1	
Power adapter	63040-010036-210-RS	1	Vin:90~264VAC;36W , Vout:12VDC;Φ2.5/Φ5.5/lock (AFL3-W07A-AL / AFL3-W07A-AL2 / AFL3-W10A-AL)
	63040-010060-211-RS	1	Vin:90~264VAC;36W , Vout:12VDC;Φ2.5/Φ5.5/lock (AFL3-12A-AL / AFL3-W15A-AL)
RJ-45 to DB-9 COM port transfer cable	32005-004600-100-RS	1	300mm, 26AWG, (A) D-SUB 9 male, (B) RJ-45

AFL3-W07A-AL
Fully Integrated I/O

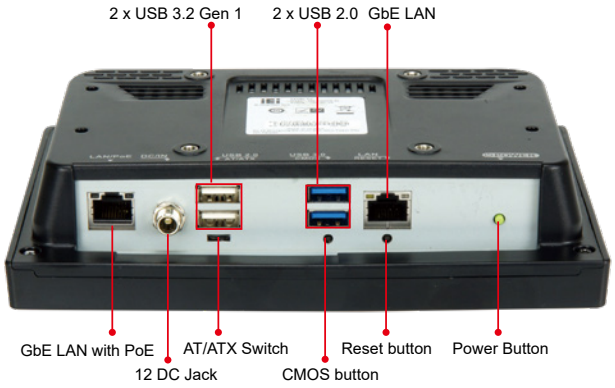

AFL3-W07A-AL2
Fully Integrated I/O

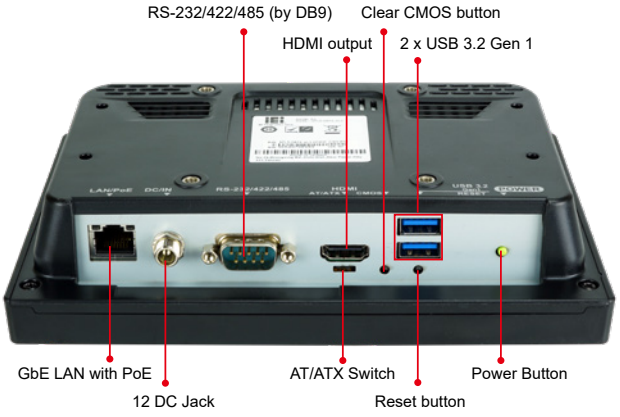

AFL3-W10A-AL
Fully Integrated I/O

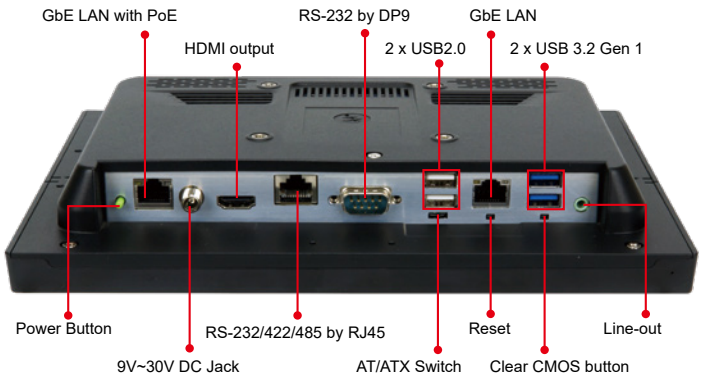

AFL3-12A-AL
Fully Integrated I/O

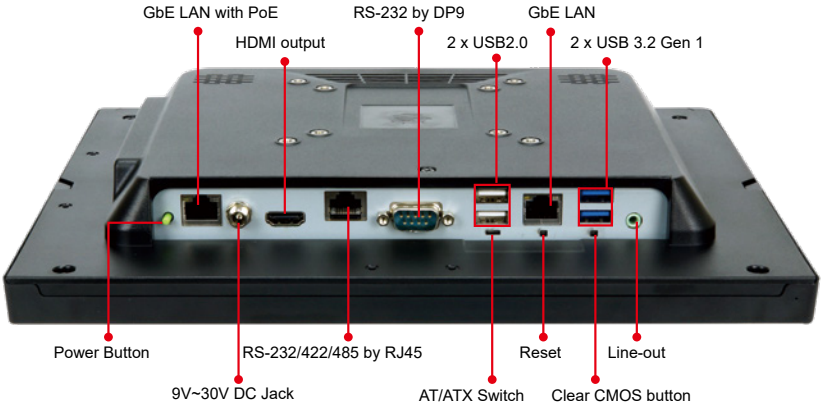

AFL3-W15A-AL
Fully Integrated I/O

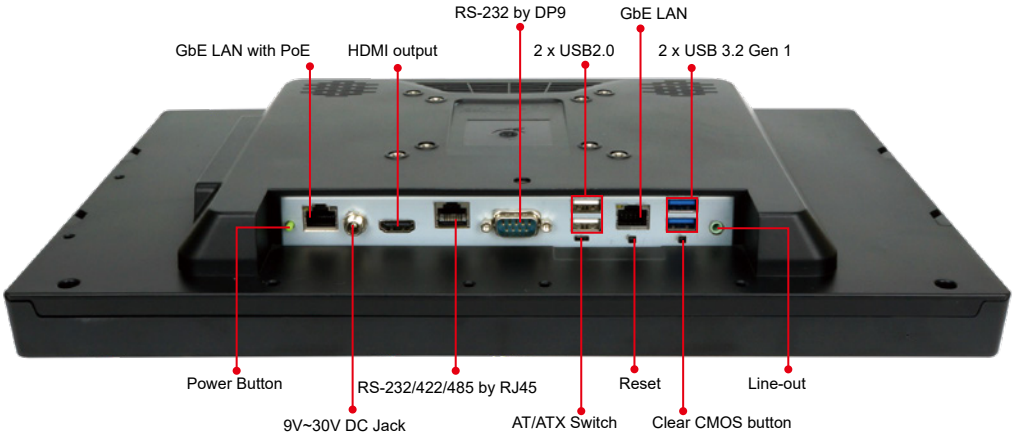

AFL3-W07A-AL Dimensions (Unit: mm)

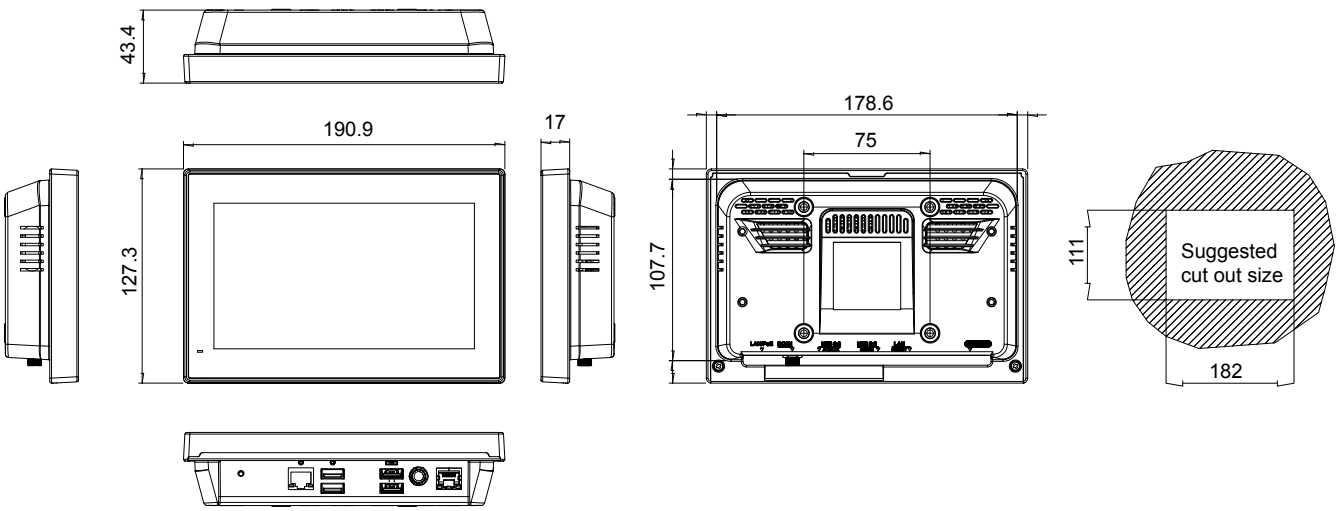

AFL3-W07A-AL2 Dimensions (Unit: mm)

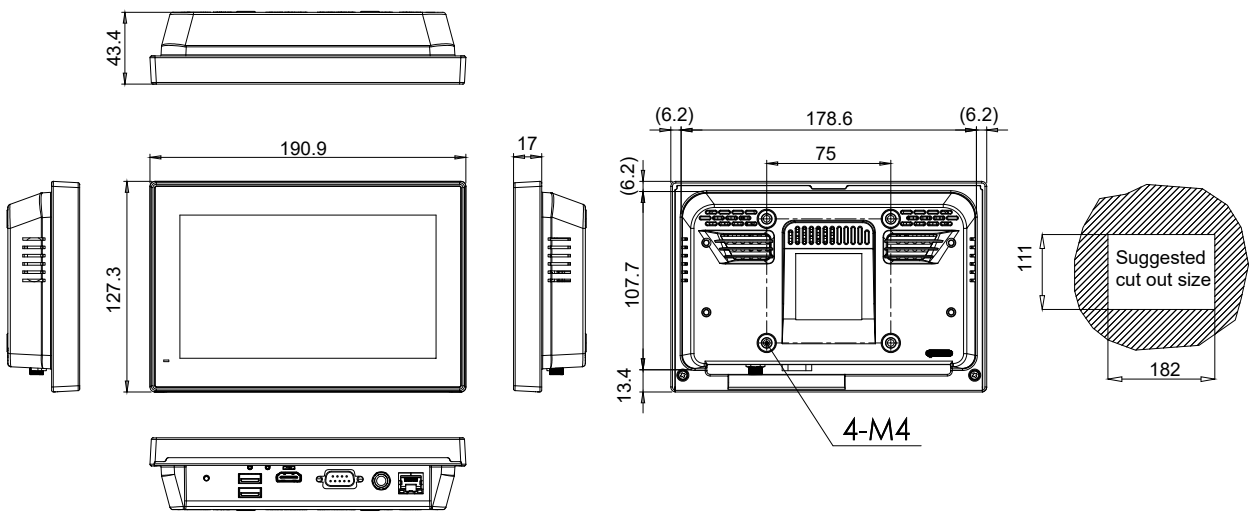

AFL3-W10A-AL Dimensions (Unit: mm)

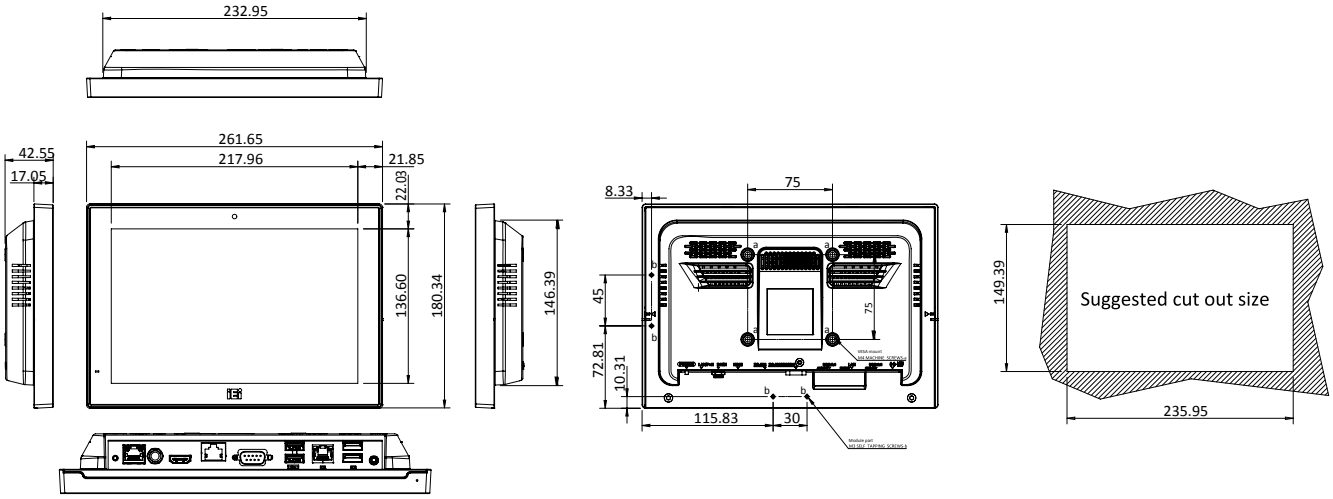

AFL3-12A-AL Dimensions (Unit: mm)

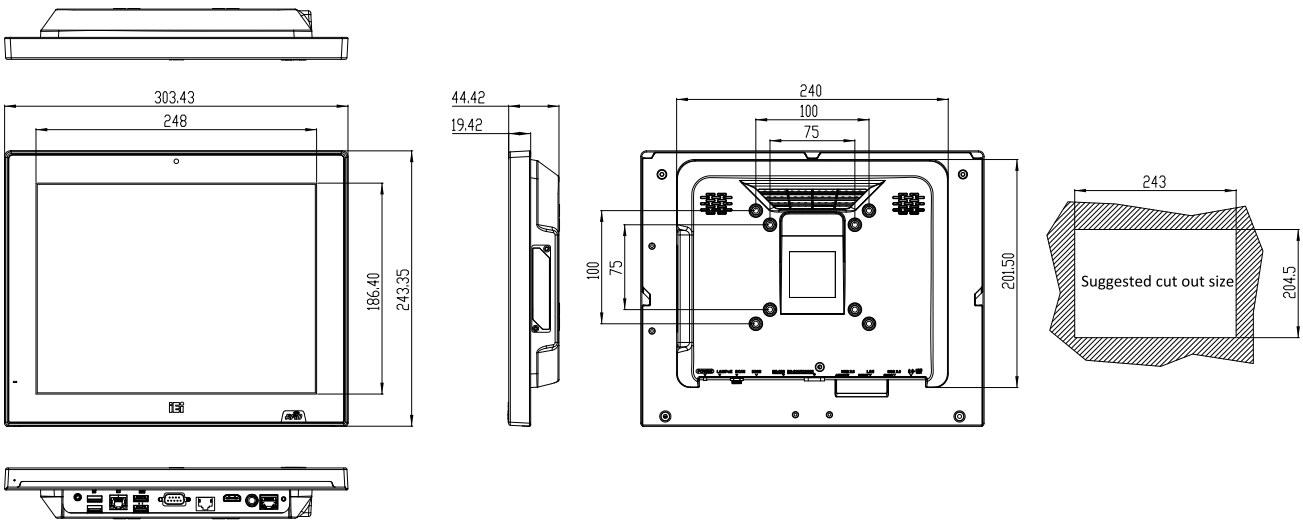

AFL3-W15A-AL Dimensions (Unit: mm)

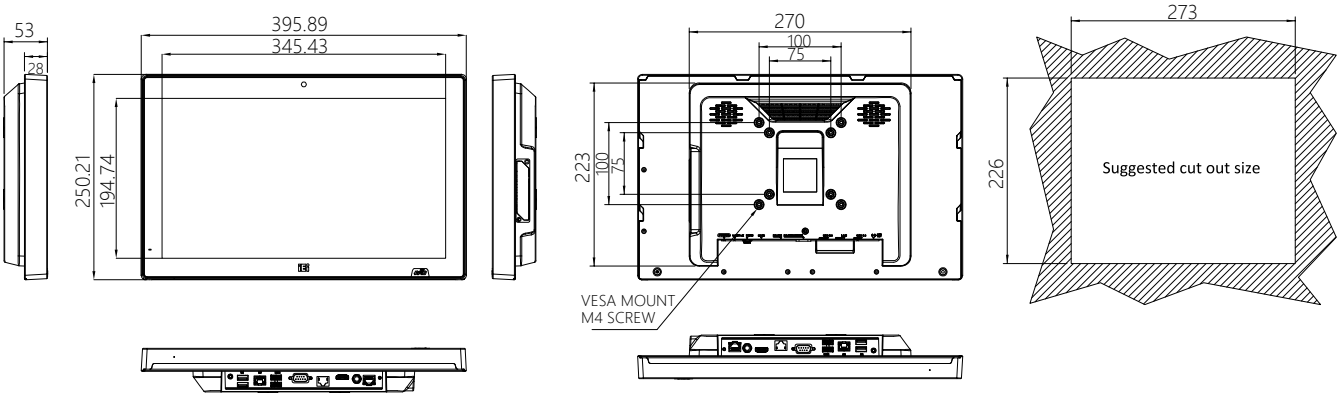

AFL3 Whiskey Lake with PoE Selection Guide







LCD Size		15.6”	18.5”	21.5”
Model		AFL3-W15C-ULT5	AFL3-W19C-ULT5	AFL3-W22C-ULT5
LCD	Size	15.6”	18.5”	21.5”
	Resolution	1366 x 768 (16:9)	1366 x 768 (16:9)	1920 x 1080 (16:9)
	Brightness (cd/m²)	300	250	250
	Contrast Ratio	500:1	1000:1	1000:1
	Viewing Angle (H-V)	170º/160º	170º/160º	170º/160º
	Backlight MTBF (hrs)	50000	30000	30000
Touch Screen		PCAP with USB interface (anti-UV/AG coating)		
Touch Controller		EXC3160		
Mainboard	CPU	Intel® Whiskey Lake-U quad-core processor		
	Memory	Two 260-pin 2400MHz dual-channel DDR4 SO-DIMMs supporting up to 32 GB		
	Ethernet	LAN1 & LAN2: Intel® I211; LAN3: Intel® I219		
	Audio Codec	ALC888S		
Storage		1 x M.2 M-key 2280 PCIe 3.0 x4 (PCIe/SATA Signal)		
		1 x 2.5” SATA 3Gb/s HDD bay		
I/O Ports & Switch		2 x PoE GbE LAN (optioal IEEE802.3af/at/bt) 1 x GbE LAN 4 x USB 3.2 Gen.2 1 x HDMI output 1 x RS-232/422/485 1 x RS-232 1 x 12V DC jack 1 x Power switch 1 x AT/ATX switch		
E-Window Expansion		PCIe Mini slot (PCIe+USB)		
Audio		AMP 3W + 3W (internal speaker)		
Camera / Microphone		2-megapixel with low light function, digital microphone		
Wireless & Bluetooth		IEEE 802.11 a/b/g/n/ac, Bluetooth V4.1 M.2 A+E key 2230 slot (PCIe/USB signal)		
Physical	Construction Front Panel	PC + ABS Plastic		
	Mounting	Panel, Wall, Stand and Arm VESA 75mm x 75mm , 100mm x 100mm		
	Color	Black C		
	Dimensions (W x H x D) (mm)	396 x 250 x 64	470 x 290 x 70	528 x 336 x 68
	Cut-out Dimensions (W x H)	369 x 226	443 x 261	502 x 303
	Net/Gross Weight (kgs)	4.5/6.5	7.3/10	8.27/11.27
Environment	Operating Temperature (°C) (Ambient with air flow)	-20°C~50°C		
	Storage Temperature (°C)	-20°C~60°C		
	Humidity	10% to 95% (non-condensing)		
	IP Level	IP 64 compliant front panel		
	Safety & EMC	CE / FCC class A		
	Thermal Solution	Fanless		
Power	Power Requirement	12V, 8A		
		PoE IEEE802.3af/at/bt (redundancy, power load-sharing)		
ErP		ErP 2009/125/EC		

Thermal solution

AFL3 Whiskey Lake with PoE

NEW

Intelligent PoE Management System

Features

- W15.6"~ W21.5" light industrial interactive panel PC
- 8th Generation Intel® Core™ i5 on-board Whiskey Lake-U processor
- Selectable AT/ATX power mode
- Built-in speakers
- Support PoE PD IEEE803.2 af/at/bt (optional)
- IP64 compliant front panel
- Touch screen wth anti-UV / anti-glare coating
- Support Auto Flow Control over RS-485



Intel® Whiskey lake | Fanless | PoE | Touchscreen | Anti-glare Coating | AT/ATX

Specifications

Model		AFL3-W15C-ULT5	AFL3-W19C-ULT5	AFL3-W22C-ULT5
LCD	Size	15.6"	18.5"	21.5"
	Resolution	1366 x 768 (16:9)	1366 x 768 (16:9)	1920 x 1080 (16:9)
	Brightness (cd/m²)	300	250	250
	Contrast Ratio	500:1	1000:1	1000:1
	Viewing Angle (H-V)	170°/160°	170°/160°	170°/160°
	Backlight MTBF (hrs)	50000	30000	30000
Touch Screen		PCAP with USB interface (anti-UV/AG coating)		
Touch Controller		EXC3160		
Mainboard	CPU	Intel® Whiskey Lake-U quad-core processor		
	Memory	Two 260-pin 2400MHz dual-channel DDR4 SO-DIMMs supporting up to 32 GB		
	Ethernet	LAN1 & LAN2: Intel® I211; LAN3: Intel® I219		
	Audio Codec	ALC888S		
Storage		1 x M.2 M-key 2280 PCIe 3.0 x4 (PCIe/SATA Signal) 1 x 2.5" SATA 3Gb/s HDD bay		
I/O Ports & Switch		2 x PoE GbE LAN (optioal IEEE802.3af/at/bt) 1 x GbE LAN 4 x USB 3.2 Gen.2 1 x HDMI output 1 x RS-232/422/485 1 x RS-232 1 x 12V DC jack 1 x Power switch 1 x AT/ATX switch		
E-Window Expansion		Full size mini-PCIe slot (PCIe/USB)		
Audio		AMP 3W + 3W (internal speaker)		
Camera / Microphone		2-megapixel with low light function, digital microphone		
Wireless & Bluetooth		IEEE 802.11 a/b/g/n/ac, Bluetooth V4.1 M.2 A+E key 2230 slot (PCIe/USB signal)		
Physical	Construction Front Panel	PC + ABS Plastic		
	Mounting	Panel, Wall, Stand and Arm VESA 75mm x 75mm , 100mm x 100mm		
	Color	Black C		
	Dimensions (W x H x D) (mm)	396 x 250 x 64	470 x 290 x 70	528 x 336 x 68
	Cut-out Dimensions (W x H)	369 x 226	443 x 261	502 x 303
	Net/Gross Weight (kgs)	4.5/6.5	7.3/10	8.27/11.27
Environment	Operating Temperature (°C) (Ambient with air flow)	-20°C~50°C		
	Storage Temperature (°C)	-20°C~60°C		
	Humidity	10% to 95% (non-condensing)		
	IP Level	IP 64 compliant front panel		
	Safety & EMC	CE / FCC class A		
	Thermal Solution	Fanless		
Power	Power Requirement	12V, 8A PoE IEEE802.3af/at/bt (redundancy, power load-sharing)		
ErP		ErP 2009/125/EC		

Rich Interface

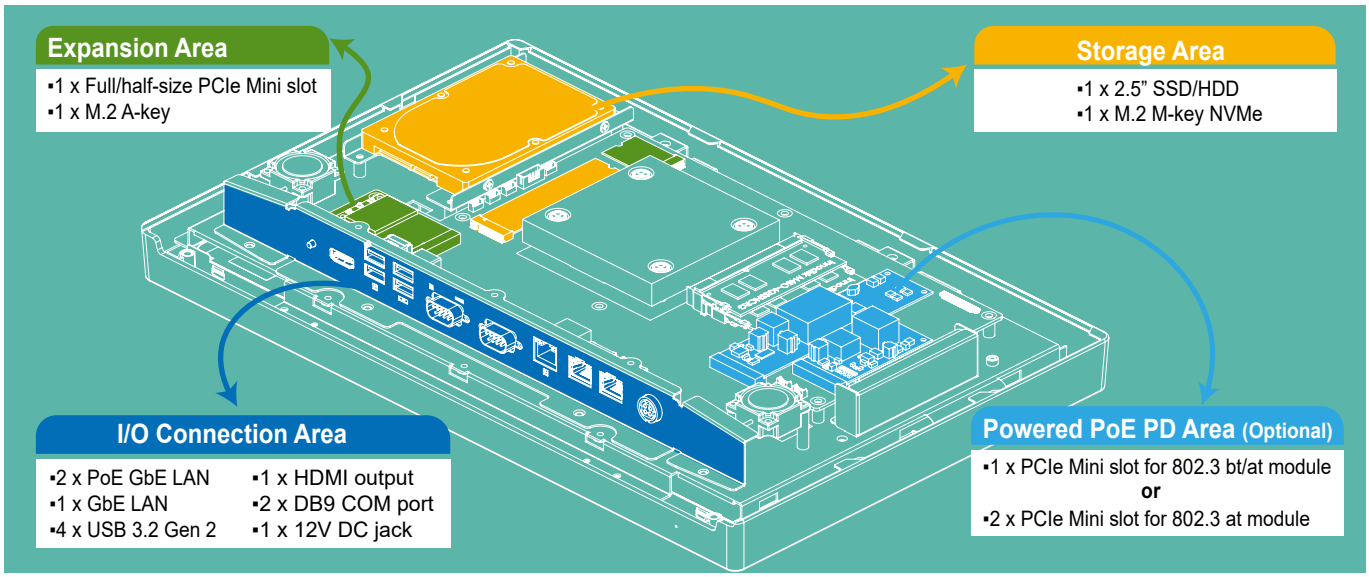

IEEE802.3 PD Module



GPOE-PD-BT01-R10

- Support PoE IEEE802.3 af/at/bt
- Support up to 71watt PD
- PCIe Mini form factor (IEI defined pin)
- Operating temperature: -10°C~60°C
- Operating humidity: 5% ~ 95%



GPOE-PD-AT01-R10

- Support PoE IEEE802.3 af/at
- Support up to 25.5watt PD
- PCIe Mini form factor (IEI defined pin)
- Operating temperature: 0°C~60°C
- Operating humidity: 5% ~ 95%

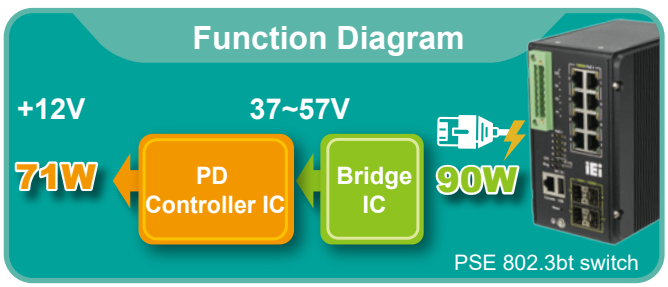

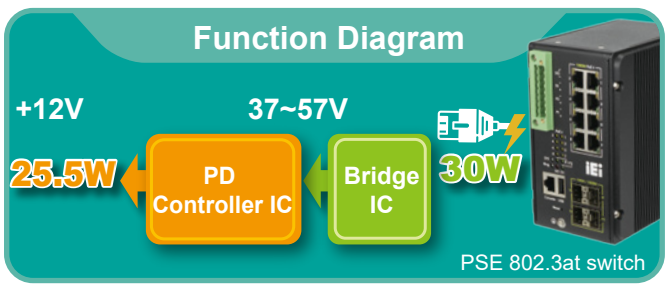

IEEE802.3at Load-sharing

Customers who is unable to upgrade their PSE switch to IEEE802.3bt standard can, simply upgrade the WHL-U panel PC by installing IEI's GPOE-PD-AT01 module, and power the device with two IEEE802.3at standard PSE ports

AFL3-WxxC-ULT5 + 2 x IEEE802.3at card (GPOE-PD-AT01-R10)

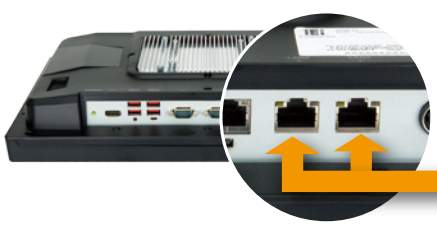

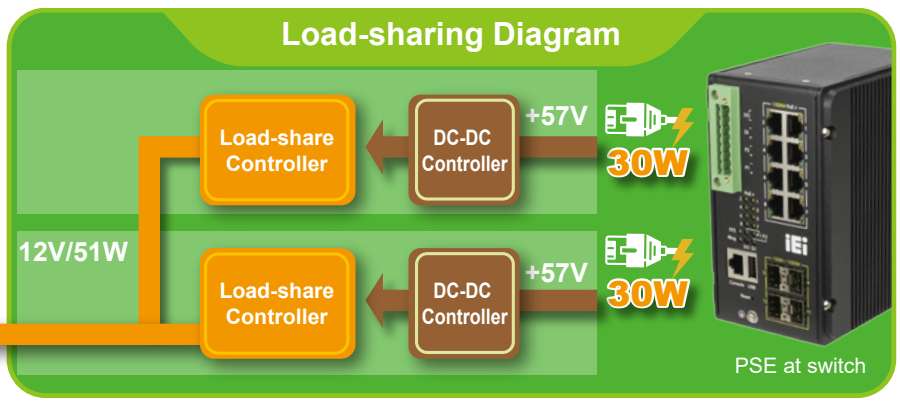

Ordering Information

Part No.	Description
AFL3-W15C-ULT5-i5/P/PC/4G-R10	Wide 15.6" 300cd/m² 1366x768 Panel PC with 8th generation 14nm Intel® Whiskey Lake Core™ i5-8365UE (15W) on-board processor (ULT), PoE option, 802.11a/b/g/n/ac Wi-Fi module, PCAP touch, 2M camera, microphone, 1*4GB DDR4 RAM, with AG, R10
AFL3-W19C-ULT5-i5/P/PC/4G-R10	Wide 18.5" 250cd/m² 1366x768 Panel PC with 8th generation 14nm Intel® Whiskey Lake Core™ i5-8365UE (15W) on-board processor (ULT), PoE option, 802.11a/b/g/n/ac Wi-Fi module, PCAP touch, 2M camera, microphone, 1*4GB DDR4 RAM, with AG, R10
AFL3-W22C-ULT5-i5/P/PC/4G-R10	Wide 21.5" 250cd/m² 1920x1080 Panel PC with 8th generation 14nm Intel® Whiskey Lake Core™ i5-8365UE (15W) on-board processor (ULT), PoE option, 802.11a/b/g/n/ac Wi-Fi module, PCAP touch, 2M camera, microphone, 1*4GB DDR4 RAM, with AG, R10
GPOE-PD-AT01-R10	PoE PD IEEE802.3af/at with PCIe Mini form factor, supports AFL3-W15C/W19C/W22C-ULT5, R10
GPOE-PD-BT01-R10	PoE PD IEEE802.3af/at/bt with PCIe Mini form factor, supports AFL3-W15C/W19C/W22C-ULT5, R10

Options

Item	AFL3-W15C-ULT5	AFL3-W19C-ULT5	AFL3-W22C-ULT5
Panel Mounting Kit	AFL3PK-W15A-R10	AFL3PK-W19C-R10	AFL3PK-W19C-R10
Wall Mounting Kit	AFLWK-19B		
Rack Mounting Kit	AFL3RK-W15B-R10	N/A	N/A
Arm	ARM-11-RS/ARM-31-RS		
Stand	STAND-A21-R10/ STAND-210-R11/STAND-A19-RS/STAND-C19-R10		
Magnetic Card Reader	AFL3P-W10MSR-U-R10		
Barcode Scanner	AFL3-2D-R11		
RFID Reader (13.56 MHz Mifare Type For ATO assembly)	AFL3-MF-RFID-KIT03-R10	AFL3-MF-RFID-KIT03-R10	AFL3-MF-RFID-KIT03-R10
*OS: Win 10 IOT Enterprise (64-bit)	AFL3-W15C-ULT5-W10E64-V-R10		

Packing List

Item	Part No.	Q'ty	Remark
Round head machine screw	44003-020041-RS	2	M2*4 round head machine screw
	44003-020041-RS	4	M2*4 round head machine screw
Pan head machine screw	44403-040061-RS	4	M4*6 pan head machine screw
Fix holder	46003-009500-RS	2	
Power cord	32702-000400-200-RS	1	
Power adapter	63040-010096-200-RS	1	Vin: 90~264VAC; 96W, Vout: 12VDC; Din 4Pin/lock

AFL3-W15C-ULT5
Fully Integrated I/O

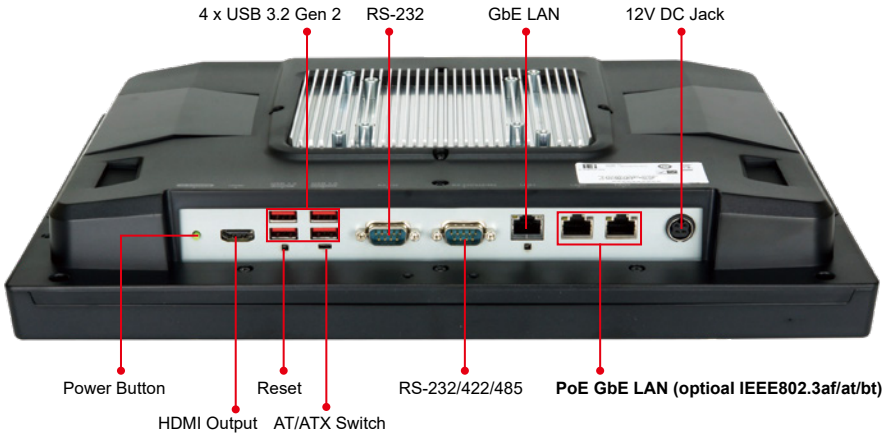

AFL3-W19C-ULT5
Fully Integrated I/O

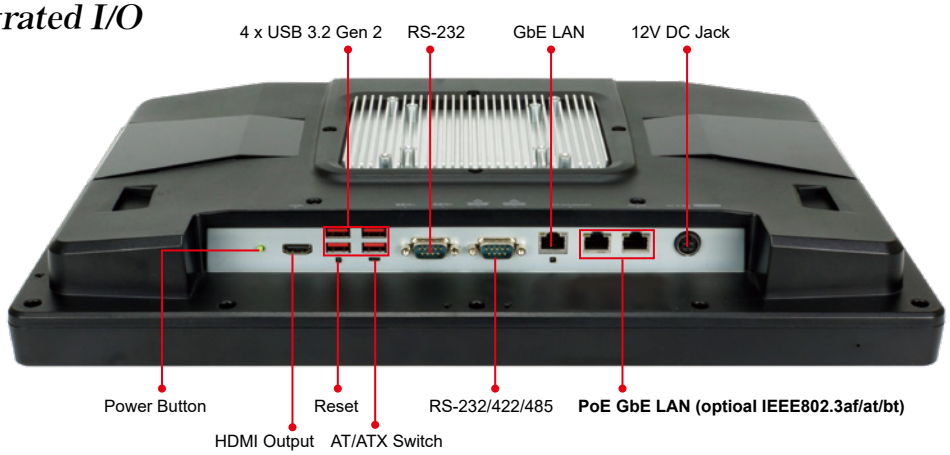

AFL3-W22C-ULT5
Fully Integrated I/O

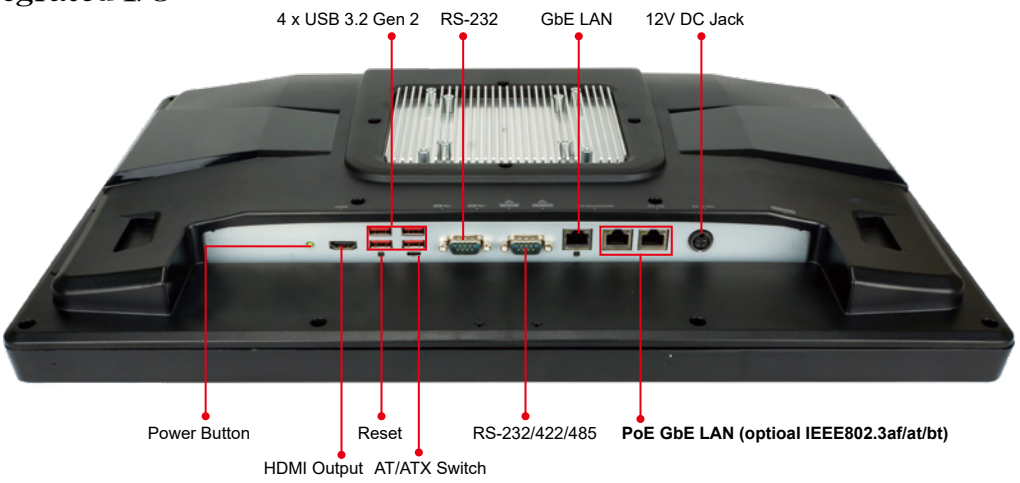

AFL3-W15C-ULT5 Dimensions (Unit: mm)

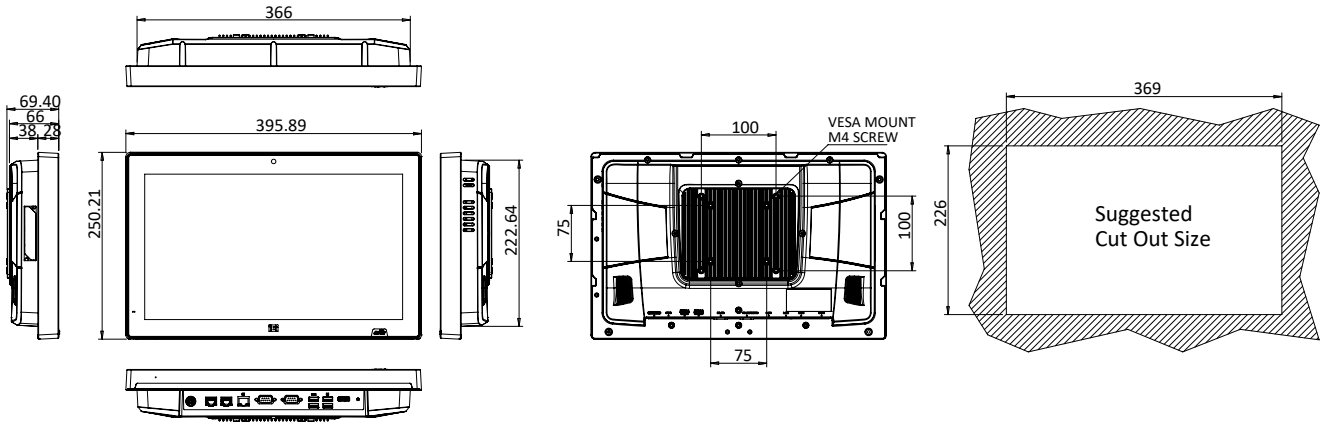

AFL3-W19C-ULT5 Dimensions (Unit: mm)

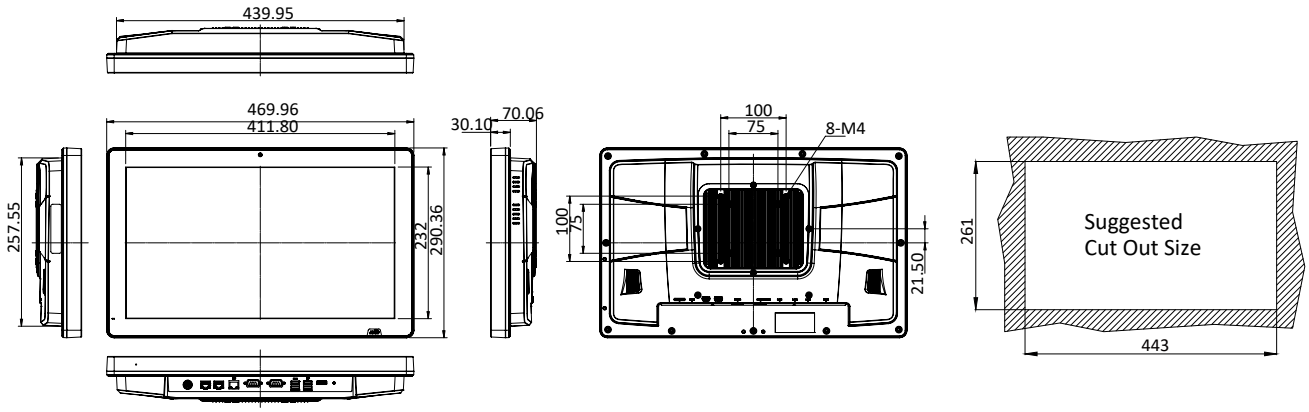

AFL3-W22C-ULT5 Dimensions (Unit: mm)

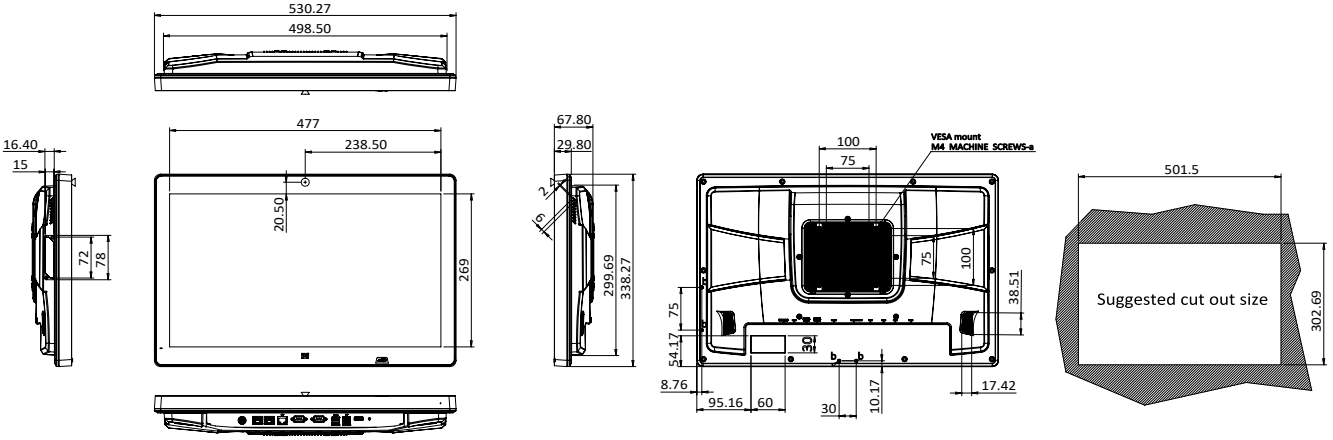

AFOLUX GEN III Interactive Panel PC

Leading the Evolution of Intelligent HMI

AFOLUX GEN III Panel PC, a specialized all-in-one panel computer with 7-inch to 15.6-inch PCAP touchscreen, opens a new era of automation. It looks stylish like a tablet, and supports 802.11ac and Bluetooth 4.0 high speed connectivity. Its robustness meets industrial standards and its scalability make it easy to expand I/O options. The AFOLUX GEN III is designed for a wide range of applications which can be applied in different scenarios.



Robustness

- IP65/IP64 front, IPx1 rear cover
- -10°C~50°C extended operating temperature
- 6H PCAP multi-touch

Scalability

- 1D/2D barcode module for retail applications
- 13.56MHz Mifare reader: meets ISO 14443A/B,15693
- MSR card reader for identifications
- E-Window for function expansion

Stylish

- ABS plus PC plastic light weight hosing
- 2mm bezel seamless design
- Upright portrait installation possible for all touch devices
- Less screw design

Connectivity

- Digital microphone, 2-megapixel camera, speakers
- Wireless 802.11ac connectivity
- Bluetooth 4.0 (optional)

Multiple Performance Choice

AFOLUX GEN III Panel PC, a specialized all-in-one panel computer with 7-inch to 15.6-inch PCAP touchscreen, opens a new era of automation. It looks stylish like a tablet, and supports 802.11ac and Bluetooth 4.0 high speed connectivity. Its robustness meets industrial standards and its scalability make it easy to expand I/O options. The AFOLUX GEN III is designed for a wide range of applications which can be applied in different scenarios.

A. Fan-free Quad Core and Dual Core Intel® Celeron® Platform

- Quad-core Intel® J1900 2.0 GHz/Dual-core Intel® N2807 Processor
- Intel® HD Graphics Gen 7 Graphics Performance Allows Smooth 2D/3D Graphics Application
- Green Memory
- Fan-free design

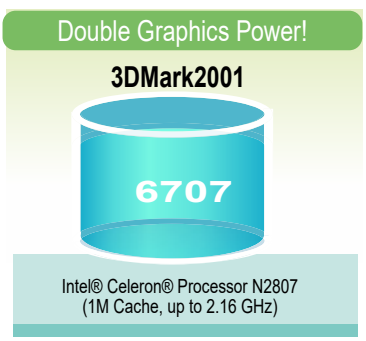



B. 7, 6th Generation Intel® Solution

Breakthrough Performancae

- 15.6" , 18.5" and 22" fanless light-industrial Panel PC with Intel® Skylake / Kabylake Low power ULT BGA 1356 single package platform
- 14nm processor using 2nd generation 3-D tri-gate transistors
- Support dual-channel DDR4 & DDR3L memory (ECC optional)

Enhanced Graphics / Media

- Gen 9 graphics engine
- 3 independent displays with audio
- Display resolutions supporting up to 4K@60Hz

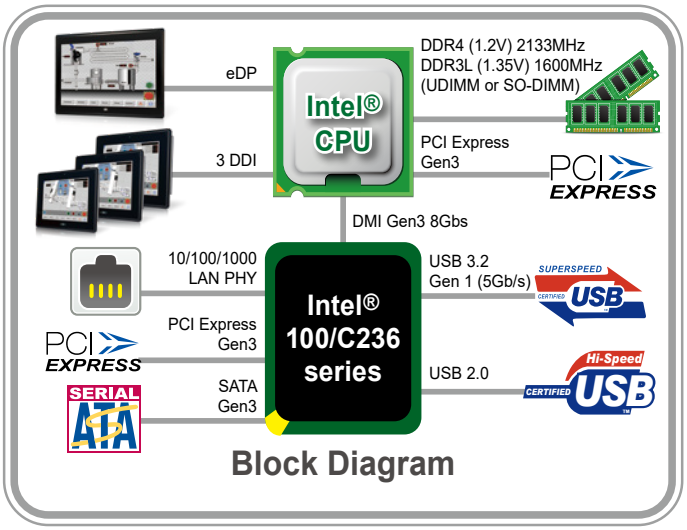

Block Diagram

	ULT			
Item	**8 Series**	**9 Series**	**100 Series**	**100 Series**
Platform Name	Haswell	Broadwell	Skylake	Kabylake
Process	22nm	14nm	14nm	14nm
CPU Package	BGA1168	BGA1168	BGA1356	BGA1356
Memory	DDR3L	DDR3/DDR3L 1600	DDR3L/DR4	DDR3L/DR4
PCI Express Lanes	Up to 8 Lanes PCIe (Gen2)	Up to 12 PCIe (Gen2)	Up to 12 PCIe (Gen3)	Up to 12 PCIe (Gen3)
PCH	PCH-LP	PCH-LP	PCH-LP Premium/Base	PCH-LP Premium/Base

Easy Assembly and Stylish Outlook

Screw-less Design

Only 2 screws are needed for rear cover installation, making it easy to access and replace storage and PCIe Mini card quickly.



2mm Narrow Bezel

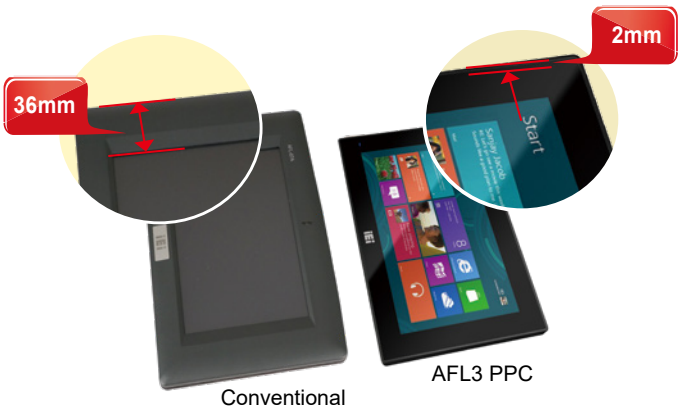

Symmetric Bezel

Landscape/Portrait screen mode supports different applications

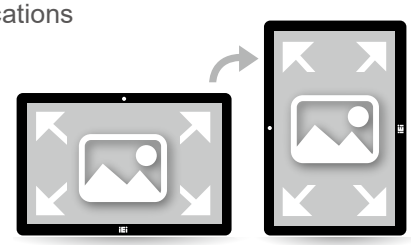

Light Weight Plastic Housing

The ABS plus PC plastic housing helps to shape the stylish outlook and only weight 1/3 of metal housing panel PC.



Fast Transmission Wireless 802.11ac

- 2.4 GHz and 5 GHz dual band supplies faster and reliable signal
- The incredible wireless speed makes it ideal for handling multiple HD movie streams, high-resolution on-line games, stereo music, VoIPs and data streams at the same time stably and smoothly.

Maximum Speed: Next generation 802.11ac VS. 802.11n

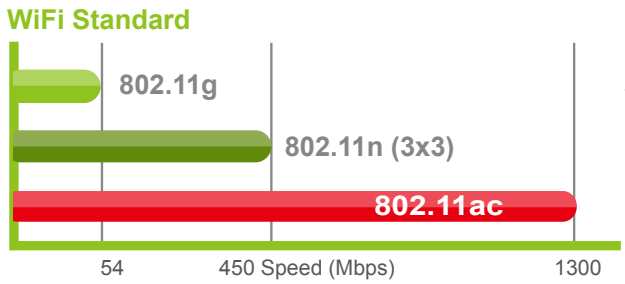



E-Window Tool Kit

Innovative E-windows technology is a new modular way of adding flexible functionality to a wide range of device. Using standardized component helps system integrators easily add more features without any costly efforts.



E-Window

Features

- Easy maintenance
- Variety module & I/O plate with flexible customization
- Integration of multiple functions
- Easy for replacement with different modules

E-MPCIE-LAN-R10

E-MPCIE-3G-R10

Ordering Information: (shipment by assembly to order)

Item	Description	Support list	
E-MPCIE-LAN-R10	PCIe mini card supports 1-port GbE with REALTEK RTL8111HN-CG controller, with PMS 194C I/O bracket and 250mm cable, R10	AFL3-12A-BT * AFL3-W15A-BT * AFL3-W19A-AL	AFL3-W15C-UTL3 AFL3-W19C-UTL3 AFL3-W22C-ULT3
E-MPCIE-DLAN-R10	PCIe mini card supports PCIe mini card supports 2-port GbE with Intel I211 controller, with PMS 194C I/O bracket and 250mm cable, R10	AFL3-12A-BT * AFL3-W15A-BT * AFL3-W19A-AL	AFL3-W15C-UTL3 AFL3-W19C-UTL3 AFL3-W22C-ULT3
E-MPCIE-3G-R10	PCIe mini card supports 3G WWAN Module , with PMS 130C I/O bracket, RF antenna 300mm cable and GSM antenna cable, R10	AFL3-12A-BT AFL3-12C-BT AFL3-W15A-BT AFL3-W19A-AL	AFL3-W15C-UTL3 AFL3-W19C-UTL3 AFL3-W22C-ULT3

* Remove AFL3-USBHUB-R10

Bluetooth 4.0 (optional)

- Bluetooth 4.0 (BLE :Bluetooth Low Energy)/ 3.0 + HS (High Speed) data rate up to 24 Mbit/s
- 10m~20m (depending on environment)



Version	Data rate	Maximum application throughput
Version 1.2	1 Mbit/s	0.7 Mbit/s
Version 2.0 + EDR	3 Mbit/s	2.1 Mbit/s
Version 3.0 + HS	Perhaps 24 Mbit/s	(note: only with AMP and depends on the AMP , BT itself remains 2.1 Mbit/s max)
Version 4.0	Perhaps 24 Mbit/s	(note: only with AMP and depends on the AMP , BT itself remains 2.1 Mbit/s max)

Selectable AT/ATX Power Mode

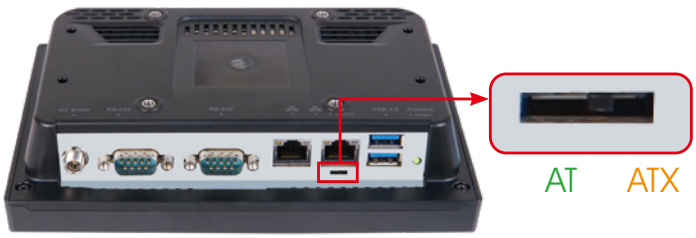

Convenient Power Mode Setting

AT Power Mode

With the AT mode selected, the power is controlled by a central power unit rather than a power switch. The AFOLUX PPCs turns on automatically when the power is connected.

ATX Power Mode

With the ATX mode selected, the AFL series panel PC goes in a standby mode when it is turned off. The panel PC can be easily turned on via network or a power switch in standby mode. Remote power control is perfect for advertising applications since the broadcasting time for each panel PC can be set individually and controlled remotely.



Applications

- Plant environment monitoring system
- Factory automation platform
- Manufacturing shop flow

Advantages

- Easy to turn on/off with wall/ panel mounting
- Automatic start when power connected



Applications

- Security surveillance
- Advertising terminal

Advantages

- Power management
- Remote control via network advantage

IP65 Front Panel /IPx1 Rear Protection

The IP 65 compliant front panel of the AFOLUX GEN III panel PC has passed tests to check if there is any water, dust or dirt passing the sealing design. Reference IEC60529 Testing Procedures:

Hose Diameter: 25.4 mm (UL50 Type 4X), The distance from water hose to DUT is 3 meters.

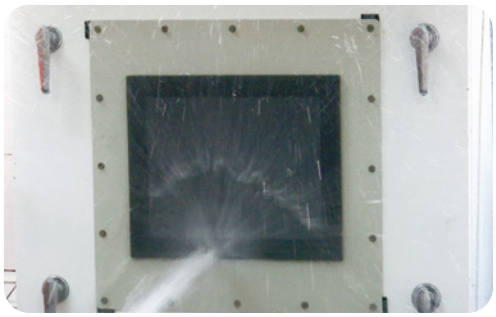

Test for protection against water



Test for protection against dust

Software OSD Configuration

IEI patented system software utility allows users to adjust system settings through the software interface in Windows environment instead of pressing the membrane keypad below the front panel.

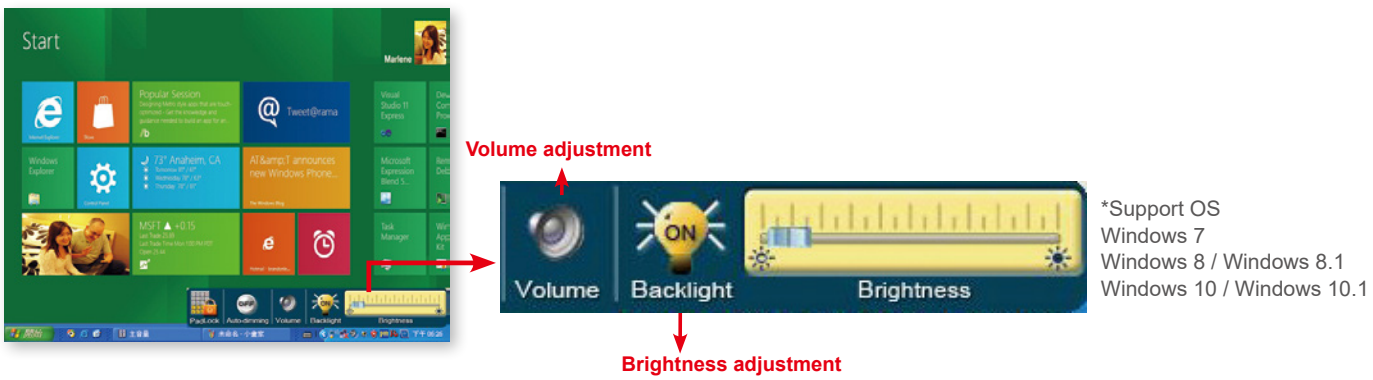

Rich Peripherals



A. Built-in 13.56 MHz Mifare RFID Reader

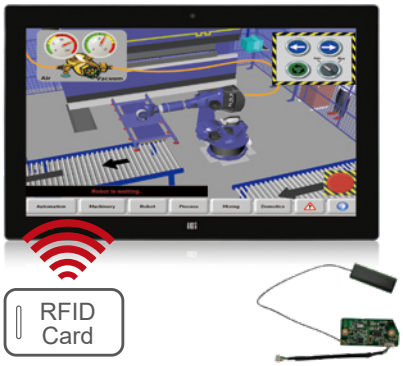

Model	AFL3-MF-RFID-KIT02-R10	
Support Protocol	ISO 15693/ISO 14443A/ISO 14443B	
RF Frequency	13.56 MHz	
RFID IC	TI TRF7960	
Operating Distance	2-3cm	
Interface	USB	
Driver Support	Windows® 2000 Windows® XP Windows® 7/8 Windows® 10	Windows® Server 2003 Windows® Server 2008 Windows® Server 2008 R2 (x86 and x64)

IEI RFID Software Development Kit

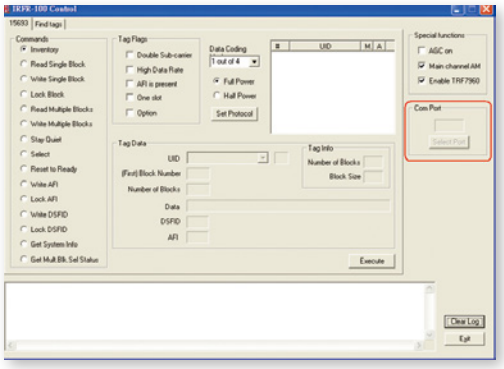

- **COM Port Settings and Activation Area**
  Allows the user to select the serial port that communicates with the RFID reader module.
- **Commands Area**
  Displays various command options for user to select.
- **Data Input Area**
  The data input area is where the user enters block number, key,key data, and other information required by certain commands.
- **Raw Data Display Area**
  Shows all communication logs and responses of the executed commands.
- **Mifare Card ID Display Area**
  Displays the Mifare card ID when the Mifare card is detected.
- **Error Code Display Area**
  Shows the error message when an error occurs.

B. 1D/2D Barcode Reader

Modularized 1D/2D Barcode Scanner and Easy to Assemble

- Accurately decodes all 1D and 2D codes, even wrinkled, damaged or poorly printed
- 752×480 CMOS sensor captures high resolution images for decoding
- Horizontal 42° and Vertical 27.5° large scanning area



123456789

Technology	1D Code	2D Code
Read Condition	20 to 25 characters	100 to about 2,000 characters

Efficient Scanning Performance

- Area-scanning features non-direction reading drive scanning performance
- 120 mm scanning distance







AFL3-2D Specifications



AFL3-2D-R11 Dimensions (Unit: mm)

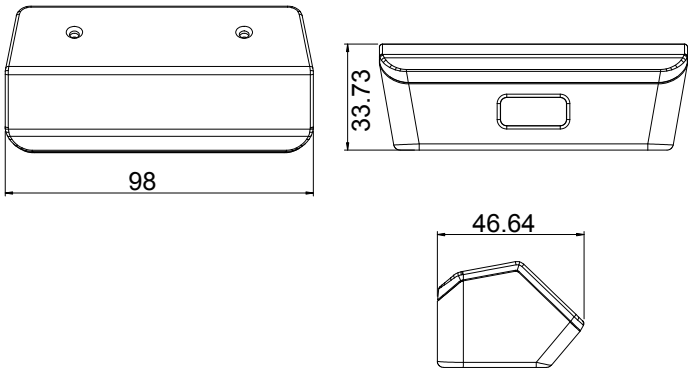

Model		AFL3-2D-R11
Image Sensor		752 × 480 CMOS
Illumination		Red LED 625±10 nm
Symbologies	2D	PDF417, Data Matrix (ECC200,ECC000,050,080,100,140), QR Code, etc.
	1D	Code128, EAN-13, EAN-8, Code39, UPC-A, UPC-E, Codabar, Interleaved 2 of 5, ITF-6, ITF-14, ISBN, Code 93, UCC/EAN-128, GS1 Databar, Matrix 2 of 5, Code 11, Industrial 2 of 5, Standard 2 of 5, Plessey, MSI-Plessey, etc.
Reading Precision		≥ 5mil
Depth of Field	UPC-A	55mm - 305mm (13mil);
	PDF417	65mm - 175mm (6.67mil); 50mm - 215mm (10mil)
	Data Matrix	50mm - 220mm (15mil);
	QR Code	65mm - 235mm (15mil)
Symbol Contrast		≥ 25%
Field of View		Horizontal 42°; Vertical 27.5°
Scan Angle**		Roll: 360°; Pitch: ±55°; Skew: ±55°
Interface		USB
Operating Temperature		-20°C to +60°C
Storage Temperature		-40°C to +80°C
Humidity		5% to 95% (non-condensing)
Ambient Light		0 ~ 100,000 LUX (natural light)
Scanning prompt		Buzzer

Magnetic Card Reader

Model	AFLP-12AMSR-U-R11
Scan Speed	100 - 1000 mm / sec (3.9 - 39 inch / sec)
Direction	Bi-direction
Life Cycle	Approx. 300,000 passes
MTBF	24,000 hours
Interface	USB
Dimensions	21 cm X 11.7 cm X 5 cm
Weight	220 g
Temperature	-20 oC to 60 oC (-4 oF to 140 oF)
Humidity	20% to 95%



AFOLUX GEN III Selection Guide







LCD Size		7”	8.4”	10.1”
Model		AFL3-W07A-BT	AFL3-08A-BT	AFL3-W10A-BT
LCD	Size	7”	8.4”	10.1”
	Resolution	1024 x 600 (16:9)	800 x 600 (4:3)	1280 x 800 (16:10)
	Brightness (cd/m²)	500	450	350
	Contrast Ratio	700:1	600:1	800:1
	LCD Color	16.2M	16.2M	16.2M
	Pixel Pitch (mm)	0.0635 (H) x 0.1905 (V)	0.213 (H) x 0.213 (V)	0.1695 (H)×0.1695 (V)
	Viewing Angle (H-V)	150º / 145º	160º / 140º	170º / 170º
	Backlight MTBF(hrs)	20000 hrs	50000 hrs	15000 hrs
Touch	Touch Screen	Projected capacitive with USB interface (anti-UV / anti-glare coating)	5-wire resistive with RS-232 interface (anti-glare coating) Projected capacitive with USB interface (anti-UV / anti-glare coating)	Projected capacitive with USB interface (anti-UV / anti-glare coating)
	Touch Controller	EETI EXC3160	PenMount DMC 9000/EETI EXC3146	EETI EXC3146
Motherboard	CPU	Intel® Celeron® N2807 (dual core, 1.58 GHz)	Intel® Celeron® J1900 (quad core, 2.0 GHz)	Intel® Celeron® J1900 (quad core, 2.0 GHz)
	RAM	2GB DDR3L onboard RAM	One 204-pin 2 GB 1333MHz single-channel, 2GB DDR3L SO-DIMM pre-installed (system max. 8GB)	One 204-pin 2 GB 1333MHz single-channel, 2GB DDR3L SO-DIMM pre-installed (system max. 8GB)
	Ethernet	2 x PCIe GbE by RTL8111HN-CG	2 x PCIe GbE by RTL8111HN-CG controller	2 x PCIe GbE by RTL8111HN-CG controller
	Audio Codec	ALC888S	ALC888S	ALC888S
Storage		mSATA	mSATA	1 x mSATA (E-Window)
I/O Ports & Switch		2 x RS-232 COM port (DB-9 connector) 2 x USB 3.2 Gen 1 (5Gb/s) 2 x GbE LAN 1 x Power switch 1 x Reset button 1 x AT/ATX switch 1 x 9-30V Lockable power jack	1 x RS-232 COM port (RJ-45 connector) 1 x RS-232/422/485 COM port (DB-9 connector) (RI/5V/12V) 2 x USB 3.2 Gen 1 (5Gb/s) 2 x RJ-45 for GbE LAN 1 x Power switch 1 x Audio port (line-out) 1 x Reset button 1 x AT/ATX switch 1 x 9-30V DC Lockable power jack	1 x RS-232 COM port (RJ-45 connector) 1 x RS-232/422/485 COM port (DB-9 connector) (RI/5V/12V) 2 x USB 3.2 Gen 1 (5Gb/s) 2 x USB 2.0 2 x RJ-45 for GbE LAN 1 x Power switch 1 x Audio port (line-out) 1 x Reset button 1 x AT/ATX switch 1 x 9-30V DC lockable power jack
Audio		AMP 2W (internal speaker, left channel output)	AMP 2W + 2W (internal speaker)	AMP 2W + 2W (internal speaker)
Camera and Microphone		N/A	2-megapixel with low light function, digital microphone	
Wireless & Bluetooth		IEEE 802.11 a/b/g/n/ac / Bluetooth 4.2 half-size mini-PCIe slot (PCIe / USB signal)	IEEE 802.11 a/b/g/n/ac / Bluetooth 4.2 half-size mini-PCIe slot (PCIe / USB signal)	IEEE 802.11 a/b/g/n/ac / Bluetooth 4.2 half-size mini-PCIe slot (PCIe / USB signal)
OSD Function		Software OSD		
Physical	Front Panel Construction	PC + ABS Plastic		
	Mounting	Panel, Wall, Stand, Arm, Rack VESA 75mm x 75mm		
	Color	Black C		
	Dimensions (WxHxD) (mm)	191 x 127 x 43	233 x 175 x 50	262 x 181 x 42
	Cut-out Dimensions (WxH) (mm)	182 x 111	207 x 143	236 x 149
	Net/Gross Weight (kgs)	0.73/1.81	0.8/2.44	1.06/2.58
Environment	Operating Temperature (°C) (Ambient with air flow)	-20°C~50°C	-15°C~55°C	-10°C~50°C
	Storage Temperature (°C)	-20°C~60°C	-20°C~65°C	-20°C~60°C
	Humidity	10% to 95% (non-condensing)		
	IP Level	IP 65 compliant front panel	IP 64 compliant front panel	
	Safety&EMC	CE / FCC		
	Thermal Solution	Fanless		
Power	Power Requirement	9 V ~ 30 V DC		
	Power Consumption	12V@2.08 (Intel® N2807 CPU with 2GB 1333 MHz DDR3L memory)	12V@2A (Intel® J1900 CPU with 2GB 1333 MHz DDR3L memory)	12V@2.3A (Intel® J1900 CPU with 2GB 1333 MHz DDR3L memory)

AFOLUX GEN III Selection Guide





LCD Size		12.1”	
Model		AFL3-12A-BT	AFL3-12C-ULT3
LCD	Size	12.1”	12.1”
	Resolution	1024 x 768 (4:3)	1024 x 768 (4:3)
	Brightness (cd/m²)	500	500
	Contrast Ratio	700:1	700:1
	LCD Color	16.2M	16.2M
	Pixel Pitch (mm)	0.240 (H) x 0.240 (V)	0.240 (H) x 0.240 (V)
	Viewing Angle (H-V)	160º / 160º	160º / 160º
	Backlight MTBF(hrs)	50000 hrs	50000 hrs
Touch	Touch Screen	5-wire resistive with RS-232 interface (anti-glare coating) Projected capacitive with USB interface (anti-UV / anti-glare coating)	Projected capacitive with USB interface (anti-UV / anti-glare coating)
	Touch Controller	PenMount DMC9000/ EETI EXC3146	EETI EXC3180
Motherboard	CPU	Intel® Celeron® J1900 (quad core, 2.0 GHz)	6th Generation Intel® Core™ i5 on-board processor
	RAM	One 204-pin 2 GB 1333MHz single-channel, 2GB DDR3L SO-DIMM pre-installed (system max. 8GB)	One 260-pin 2133MHz single-channel, 4GB DDR4 SO-DIMM pre-installed (system max. 8GB)
	Ethernet	2 x PCIe GbE by RTL8111HN-CG controller	2 x PCIe GbE by Intel® i211 controller
	Audio Codec	ALC888S	
Storage		1 x mSATA (E-Window) 1 x 2.5” SATA 3Gb/s HDD bay	1 x mSATA (E-Window) 1 x 2.5” SATA 3Gb/s HDD bay
I/O Ports & Switch		1 x RS-232 COM port (RJ-45 connector) 1 x RS-232/422/485 COM port (DB-9 connector)(RI/5V/12V) 2 x USB 3.2 Gen 1 (5Gb/s) 2 x USB 2.0 2 x RJ-45 for GbE LAN 1 x Power switch 1 x Audio port (line-out) 1 x Reset button 1 x AT/ATX switch 1 x 9-30V lockable power jack	1 x RS-232/422/485 (DB-9) 1 x RS232 (RJ-45) 2 x GbE LAN 2 x USB 2.0 2 x USB 3.2 Gen 1 (5Gb/s) 1 x DC jack (12-30V DC) 1 x HDMI 1 x Power switch 1 x Reset button 1 x AT/ATX switch
E-Window Expansion		Yes, optional (full-size mini-PCIe slot with PCIe or SATA / USB signal)	Yes, optional (full-size mini-PCIe slot with PCIe or SATA / USB signal)
Audio		AMP 3W + 3W (internal speaker)	AMP 3W + 3W (internal speaker)
Camera and Microphone		2-megapixel with low light function, digital microphone	
Wireless		IEEE 802.11a/b/g/n/ac half-size mini-PCIe slot (PCIe signal)	IEEE 802.11 a/b/g/n/ac, Bluetooth V4.1 M.2 slot A+E key 2230 slot (PCIe/USB signal)
OSD Function		Software OSD	
Physical	Front Panel Construction	PC + ABS Plastic	
	Mounting	Panel, Wall, Rack, Stand and Arm VESA 75mm x 75mm / 100mm x 100mm	Panel, Wall, Stand and Arm VESA 75mm x 75mm / VESA 100mm x 100mm
	Color	Black C	
	Dimensions (WxHxD) (mm)	304 x 243 x 44	304 x 243 x 58
	Cut-out Dimensions (WxH) (mm)	243 x 205	272 x 223
	Net/Gross Weight (kgs)	1.92/3.95	3/5.03
Environment	Operating Temperature (Ambient with air flow)	-20°C~50°C	-20°C ~ 50°C
	Storage Temperature	-20°C~60°C	-30°C ~ 60°C
	Humidity	10% to 95% (non-condensing)	
	IP Level	IP 64 compliant front panel	
	Safety&EMC	CE / FCC	CE , FCC , ErP 2009/125/EC
	Thermal Solution	Fanless	
Power	Power Requirement	9 V ~ 30 V DC	12 V ~ 30 V DC
	Power Consumption	12V@3.58A (Intel® J1900 CPU with 2GB 1333 MHz DDR3L memory)	12V@6A (Intel® Core™ i5-6300U CPU with 4GB DDR4 2133 MHz DDR4 memory)

AFOLUX GEN III Selection Guide





LCD Size		15.6”	
Model		AFL3-W15A-BT	AFL3-W15C-ULT3
LCD	Size	15.6”	
	Resolution	1366 x 768 (16:9)	
	Brightness (cd/m²)	400	
	Contrast Ratio	500:1	
	LCD Color	16.2M	
	Pixel Pitch (mm)	0.240 (H) x 0.240 (V)	
	Viewing Angle (H-V)	170º / 160º	
	Backlight MTBF(hrs)	50000 (LED backlight)	
Touch	Touch Screen	5-wire resistive with RS-232 interface (anti-glare coating), Projected capacitive with USB interface (anti-UV / anti-glare coating)	Projected capacitive with USB interface (anti-UV / anti-glare coating)
	Touch Controller	PenMount DMC9000 / EETI EXC3188	PenMount DMC9000 / EETI EXC3188
Motherboard	CPU	Intel® Celeron® J1900 (quad core, 2 GHz)	6th Generation Intel® Core™ i5 and Celeron® on-board processor
	Chipset		
	RAM	One 204-pin 1333 MHz single-channel DDR3L SO-DIMM, 2GB pre-installed (system max. 8GB)	Two 260-pin 2133/1867 MHz dual-channel DDR4 SO-DIMMs (system max. 32 GB)
	Ethernet	2 x PCIe GbE by RTL8111HN-CG controller	2 x Intel® I211 PCIe GbE controller
	Audio Codec	ALC888S	
Storage		1 x mSATA (E-Window) 1 x 2.5” SATA 3Gb/s HDD bay	1 x mSATA (E-Window) 1 x 2.5” SATA 3Gb/s HDD bay 1 x M.2 M key PCIe (2280 or 22110 PCIe signa)
I/O Ports & Switch		1 x RS-232 COM port (RJ-45 connector) 1 x RS-232/422/485 COM port (DB-9 connector) (RI/5V/12V) 2 x USB 2.0 2 x USB 3.2 Gen 1 (5Gb/s) 2 x GbE LAN 1 x Power switch 1 x Reset button 1 x AT/ATX switch 1 x Audio port (line-out) 1 x 9-30V lockable power jack	1 x RS-232 by DB-9 (RI/5V/12V) 1 x RS-232/422/485 by DB-9 (RI/5V/12V) 2 x GbE LAN 4 x USB 3.2 Gen 1 (5Gb/s) 1 x HDMI output 1 x Power switch 1 x Reset button 1 x AT/ATX switch 1 x 9-30V lockable power jack
E-Window Expansion		Yes, optional (full-size mini-PCIe slot with PCIe or SATA / USB signal)	Yes, optional (full-size mini-PCIe slot with PCIe or SATA / USB signal)
Audio		AMP 3W + 3W (internal speakers)	
Camera and Microphone		2-megapixel with low light function, digital microphone	
Wireless & Bluetooth		IEEE 802.11a/b/g/n/ac half-size mini-PCIe slot (PCIe signal)	IEEE 802.11 a/b/g/n/ac, Bluetooth V4.1 M.2 slot A+E key 2230 slot (PCIe/USB signal)
OSD Function		Software OSD	
Physical	Front Panel Construction	PC + ABS Plastic	
	Mounting	Panel, Wall, Rack, Stand and Arm VESA 75mm x 75mm / 100mm x 100mm	
	Color	Black C	
	Dimensions (WxHxD) (mm)	396 x 250 x 53	396 x 250 x 64
	Cut-out Dimensions (WxH) (mm)	273 x 226	369 x 226
	Net/Gross Weight (kgs)	3.3/5.6	4.5/6.5
Environment	Operating Temperature (°C) (Ambient with air flow)	-20°C~50°C	-20°C~50°C
	Storage Temperature (°C)	-20°C~60°C	
	Humidity	10% to 95% (non-condensing)	
	IP Level	IP 64 compliant front panel	
	Safety & EMC	CE / FCC	
	Thermal Solution	Fanless	Fanless
Power	Power Requirement	9 V ~ 30 V	
	Power Consumption	12V@4.16A (Intel® J1900 CPU with 2GB 1333 MHz DDR3 memory)	12V@.6A (Intel® Core™ i5-6300U CPU with 4GB DDR4 2133 MHz DDR4 memory)

AFOLUX GEN III Selection Guide







LCD Size		18.5”		21.5”
Model		AFL3-W19C-ULT3	AFL3-W19A-AL	AFL3-W22C-ULT3
LCD	Size	18.5”	18.5”	21.5”
	Resolution	1366 x 768 (16:9)	1366 x 768 (16:9)	1920 x 1080
	Brightness (cd/m²)	250		
	Contrast Ratio	1000:1		
	LCD Color	16.7M	262K	16.7M
	Pixel Pitch (mm)	0.240 (H) x 0.240 (V)	0.240 (H) x 0.240 (V)	248.25 (H) × 248.25 (V)
	Viewing Angle (H-V)	170º/160º		
	Backlight MTBF(hrs)	30,000 (LED backlight panel)		
Touch	Touch Screen	Projected capacitive with USB interface (anti-UV / anti-glare coating)		
	Touch Controller	EETI EXC3180	EETI EXC3188	EETI EXC3180
Motherboard	CPU	Intel® Core™ i5 and Celeron® ULT Processor	Intel® Celeron® J3455 (quad core, 1.5GHz up to 2.3 GHz)	Intel® Core™ i5 and Celeron® ULT Processor
	RAM	Two 260-pin 2133/1867 MHz dual-channel DDR4 SO-DIMMs (system max. 32 GB)	One 204-pin 1600/1333 MHz single-channel DDR3L SO-DIMM, 4GB pre-installed (system max. 8GB)	Two 260-pin 2133/1867 MHz dual-channel DDR4 SO-DIMMs (system max. 32 GB)
	Ethernet	2 x Intel® I211-AT PCIe GbE controller	2 x PCIe GbE by Intel® i211 controller	2 x Intel® I211-AT PCIe GbE controller
	Audio Codec	ALC888S	ALC269	ALC888S
Storage		1 x mSATA (E-Window) 1 x 2.5” SATA 3Gb/s HDD bay 1 x M.2 M key PCIe (2280 or 22110 PCIe signa)	1 x mSATA (E-Window) 1 x 2.5” SATA 3Gb/s HDD bay	1 x mSATA (E-Window) 1 x 2.5” SATA 3Gb/s HDD bay 1 x M.2 M key PCIe (2280 or 22110 PCIe signa)
I/O Ports & Switch		1 x RS-232 by DB-9 (RI/5V/12V) 1 x RS-232/422/485 by DB-9 (RI/5V/12V) 2 x GbE LAN 4 x USB 3.2 Gen 1 (5Gb/s) 1 x HDMI output 1 x Power switch 1 x Reset button 1 x AT/ATX switch 1 x 9V ~ 30V lockable power jack	1 x RS-232/422/485 by RJ-45 1 x RS-232 by RJ-45 2 x GbE LAN 2 x USB 3.2 Gen 1 (5Gb/s) 2 x USB 2.0 1 x HDMI output 1 x 12V ~ 34V DC Jack 1 x Power switch 1 x AT/ATX switch 1 x Line out	1 x RS-232 by DB-9 (RI/5V/12V) 1 x RS-232/422/485 by DB-9 (RI/5V/12V) 2 x GbE LAN 4 x USB 3.2 Gen 1 (5Gb/s) 1 x HDMI output 1 x Power switch 1 x Reset button 1 x AT/ATX switch 1 x 9-30V lockable power jack
E-Window Expansion		Yes, optional (full-size mini-PCIe slot with PCIe or SATA / USB signal)		
Audio		AMP 3W + 3W (internal speaker)		
Camera and Microphone		2-megapixel with low light function, digital microphone		
Wireless & Bluetooth		IEEE 802.11 a/b/g/n/ac, Bluetooth V4.1 M.2 slot A+E key 2230 slot (PCIe/USB signal)		
OSD Function		Software OSD		
Physical	Front Panel Construction	PC + ABS Plastic		
	Mounting	Panel, Wall, Stand and Arm VESA 75mm x 75mm / 100mm x 100mm	Panel, Wall, Stand and Arm VESA 100mm x 100mm	Panel, Wall, Stand and Arm VESA 75mm x 75mm / 100mm x 100mm
	Color	Black C		
	Dimensions (W x H x D) (mm)	470 x 290 x 70	470 x 280 x 60	528 x 336 x 68
	Cut-out Dimensions (W x H) (mm)	443 x 261	418 x 230	502 x 303
	Net/Gross Weight (kgs)	7.3/10	6.3/9	8.27/11.27
Environment	Operating Temperature (Ambient with air flow)	-20ºC ~ 50ºC	-15ºC ~ 50ºC	-20ºC ~ 50ºC
	Storage Temperature	-20ºC ~ 60ºC		
	Humidity	10% to 95% (non-condensing)		
	IP Level	IP 64 compliant front panel		
	Safety & EMC	CE / FCC		
	Thermal Solution	Fanless		
Power	Power Requirement	9V ~ 30V DC	12V ~ 34V DC	9 V ~ 30 VDC
	Power Consumption	12V@7.1A (Intel® Core™ i5-6300U CPU with 4GB DDR4 2133 MHz DDR4 memory)	12V@3.2A (Intel® Celeron J3455 CPU with 4GB DDR3L 1866 MHz DDR3L memory)	12V@6A (Intel® Core™ i5-6300U CPU with 4GB DDR42133 MHz DDR4 memory)

AFL3-W07A-BT

Intel® Celeron® N2807 (Dual Core, 1.58 GHz)

AFL3-08A-BT

Intel® Celeron® J1900 (Quad Core, 2.0 GHz)



Features

- W7"~8.4" light industrial interactive panel PC
- 9 V ~ 30 V wide range DC input with lockable DC jack
- Selectable AT/ATX power mode
- Built-in speakers
- One mSATA slot
- IP64/IP65 compliant front panel
- IEI One Key Recovery solution alllows you to create rapid OS backup and recovery (suggested with over 4GB storage capacity)

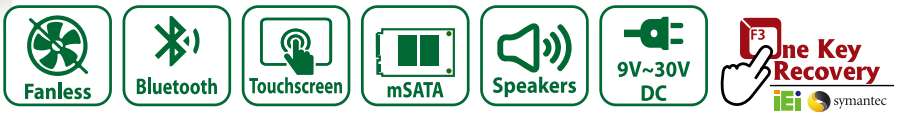

Specifications

Model		AFL3-W07A-BT	AFL3-08A-BT
LCD	Size	7"	8.4"
	Resolution	1024 x 600 (16:9)	800 x 600 (4:3)
	Brightness (cd/m²)	500	450
	Contrast Ratio	700:1	600:1
	LCD Color	16.2M	16.2M
	Pixel Pitch (mm)	0.0635 (H) x 0.1905 (V)	0.213 (H) x 0.213 (V)
	Viewing Angle (H-V)	150° / 145°	160° / 140°
	Backlight MTBF(hrs)	20000 hrs	50000 hrs
Touch	Touch Screen	Projected capacitive with USB interface (anti-UV / anti-glare coating)	5-wire resistive with RS-232 interface (anti-glare coating) Projected capacitive with USB interface (anti-UV / anti-glare coating)
	Touch Controller	EETI EXC3160	PenMount DMC 9000/EETI EXC3146
Motherboard	CPU	Intel® Celeron® N2807 (dual core, 1.58 GHz)	Intel® Celeron® J1900 (quad core, 2.0 GHz)
	RAM	2GB DDR3L onboard RAM	One 204-pin 2 GB 1333MHz single-channel, 2GB DDR3L SO-DIMM pre-installed (system max. 8GB)
	Ethernet	2 x PCIe GbE by RTL8111HN-CG	2 x PCIe GbE by RTL8111HN-CG controller
	Audio Codec	ALC888S	ALC888S
Storage		mSATA	mSATA
I/O Ports & Switch		2 x RS-232 COM port (DB-9 connector) 2 x USB 3.2 Gen 1 (5Gb/s) 2 x GbE LAN 1 x Power switch 1 x Reset button 1 x AT/ATX switch 1 x 9-30V Lockable power jack	1 x RS-232 COM port (RJ-45 connector) 1 x RS-232/422/485 COM port (DB-9 connector) (RI/5V/12V) 2 x USB 3.2 Gen 1 (5Gb/s) 2 x RJ-45 for GbE LAN 1 x Power switch 1 x Audio port (line-out) 1 x Reset button 1 x AT/ATX switch 1 x 9-30V DC Lockable power jack
Audio		AMP 2W (internal speaker, left channel output)	AMP 2W + 2W (internal speaker)
Camera and Microphone		N/A	2-megapixel with low light function, digital microphone
Wireless & Bluetooth		IEEE 802.11 a/b/g/n/ac / Bluetooth 4.2 half-size mini-PCIe slot (PCIe / USB signal)	IEEE 802.11 a/b/g/n/ac / Bluetooth 4.2 half-size mini-PCIe slot (PCIe / USB signal)
OSD Function		Software OSD	
Physical	Front Panel Construction	PC + ABS Plastic	
	Mounting	Panel, Wall, Stand, Arm, Rack VESA 75mm x 75mm	
	Color	Black C	
	Dimensions (WxHxD) (mm)	191 x 127 x 43	233 x 175 x 50
	Cut-out Dimensions (WxH) (mm)	182 x 111	207 x 143
	Net/Gross Weight (kgs)	0.73/1.81	0.8/2.44
Environment	Operating Temperature (°C) (Ambient with air flow)	-20°C~50°C	-15°C~55°C
	Storage Temperature (°C)	-20°C~60°C	-20°C~65°C
	Humidity	10% to 95% (non-condensing)	
	IP Level	IP 65 compliant front panel	IP 64 compliant front panel
	Safety&EMC	CE / FCC	
	Thermal Solution	Fanless	
Power	Power Requirement	9 V ~ 30 V	
	Power Consumption	12V@2.08 (Intel® N2807 CPU with 2GB 1333 MHz DDR3L memory)	12V@2A (Intel® J1900 CPU with 2GB 1333 MHz DDR3L memory)

Ordering Information

Part No.	Description
AFL3-W07A-BT-N1/PC/2G-R20	7" 500 cd/m² 1024 x 600 HD fanless panel PC with Intel® Celeron® N2807 dual core 1.58 GHz, 802.11a/b/g/n/ac, projected capacitive touch screen, on-board 2GB DDR3L RAM, R20
AFL3-W07A-BT-N1/PC/2G/MF-R20	7" 500 cd/m² 1024 x 600 HD fanless panel PC with Intel® Celeron® N2807 dual core 1.58 GHz, 802.11a/b/g/n/ac, projected capacitive touch screen, on-board 2GB DDR3L RAM, Mifare RFID, R20
AFL3-08A-BT-J1/PC/2G-R14	8.4" 450cd/m² SVGA fanless panel PC with Intel® Celeron® J1900 quad core 2 GHz, 802.11a/b/g/n/ac wireless module, projected capacitive touch screen, 2GB DDR3L RAM, R14
AFL3-08A-BT-J1/R/2G-R14	8.4" 450cd/m² SVGA fanless panel PC with Intel® Celeron® J1900 quad core 2 GHz, 802.11 a/b/g/n/ac wireless module, resistive touch window, 2GB DDR3L RAM, R14

Options

Item	AFL3-W07A-BT	AFL3-08A-BT
Panel Mounting Kit	AFL3PK-W07A-R11	AFL3PK-08A-R10
Wall Mounting Kit	AFLWK-12	AFLWK-12
Rack Mounting Kit	AFL3RK-W07A-R11	AFL3RK-08A-R10
Arm	ARM-11-RS/ARM-31-RS	ARM-11-RS/ARM-31-RS
Stand	STAND-B08/STAND-100-RS	STAND-B08/STAND-100-RS
V-Stand	VSTAND-A07-R11	VSTAND-A10-R11
Magnetic Card Reader	AFL3P-W7MSR-U-R10	AFL3P-W10MSR-U-R10
Barcode Scanner	N/A	AFL3-2D-R11
RFID Reader (13.56 MHz Mifare Type)	AFL3-W07A-BT-N1/PC/2G/MF-R20	N/A (Customized by project base)
*OS: Win 7 Embedded (64-bit)	AFL3-W07A-BT-WES7P64-R12 (for PCAP touch)	AFL3-W07A-BT-WES7P64-R12 (for PCAP touch) AFL3-W07A-BT-WES7E64-R12 (for Resistive touch)
*OS: Win 10 IOT Enterprise (64-bit)	AFL3-W07A-BT-W10E64-E-R12	

*OS image with CD-ROM without storage

Packing List

Item	Part No.	Q'ty	Remark
Setting kit	46003-002600-RS	2	
Round head machine screw	44003-020041-RS	2	M2*4 round head machine screw
	44003-020041-RS	4	M2*4 round head machine screw
Pan head machine screw	44403-040061-RS	4	M4*6 pan head machine screw
Fix holder	46003-009500-RS	2	
Power cord	32702-000400-200-RS	1	
Power adapter	63040-010036-210-RS (AFL3-W07A-BT / AFL3-08A-BT)	1	36W; Vin: 90V~264V AC; Vout: 12VDC; Φ2.5/Φ5.5/lock
RJ-45 to DB-9 COM port transfer cable	32005-004600-100-RS (AFL3-08A)	1	300mm, 26AWG, (A) D-SUB 9 male, (B) RJ-45

AFL3-W07A-BT Fully Integrated I/O

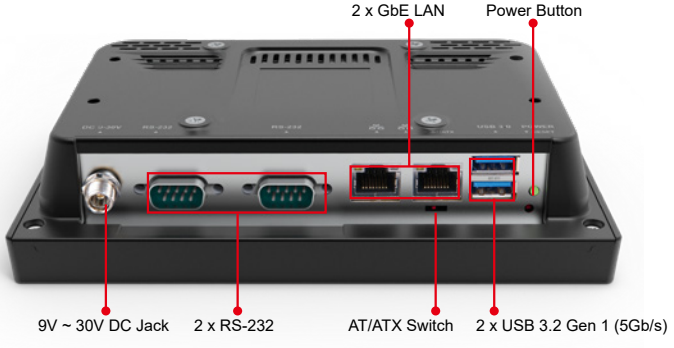

AFL3-08A-BT Fully Integrated I/O

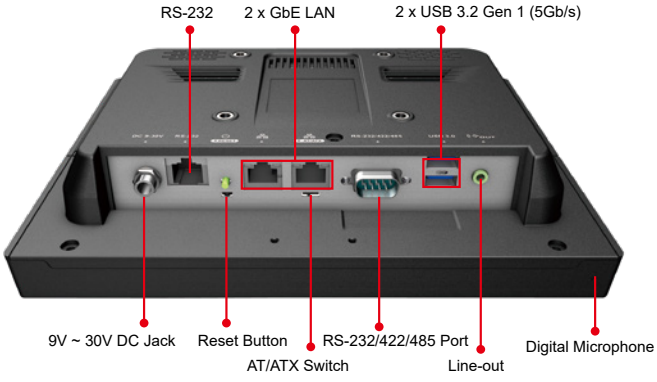

AFL3PK-W07A-R11
Panel Mounting Kit Dimensions (Unit: mm)

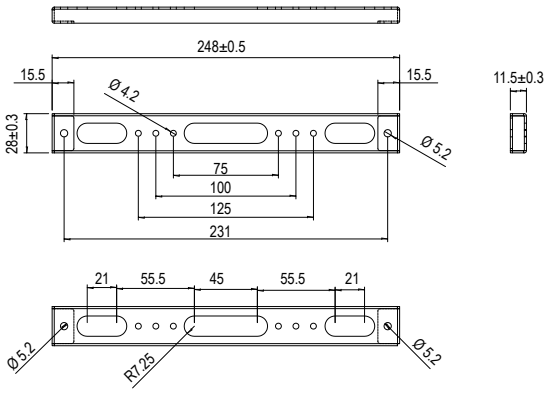

AFL3PK-08A-R10
Panel Mounting Kit Dimensions (Unit: mm)

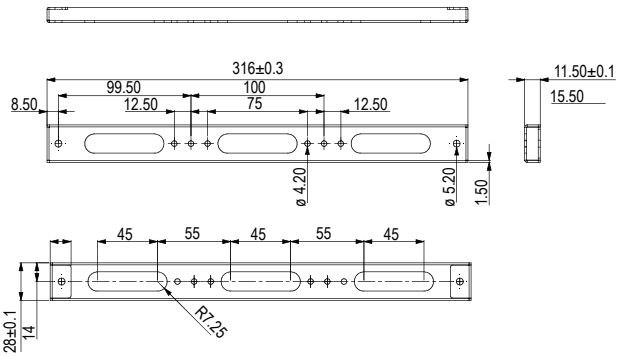

AFL3-W07A-BT Dimensions (Unit: mm)

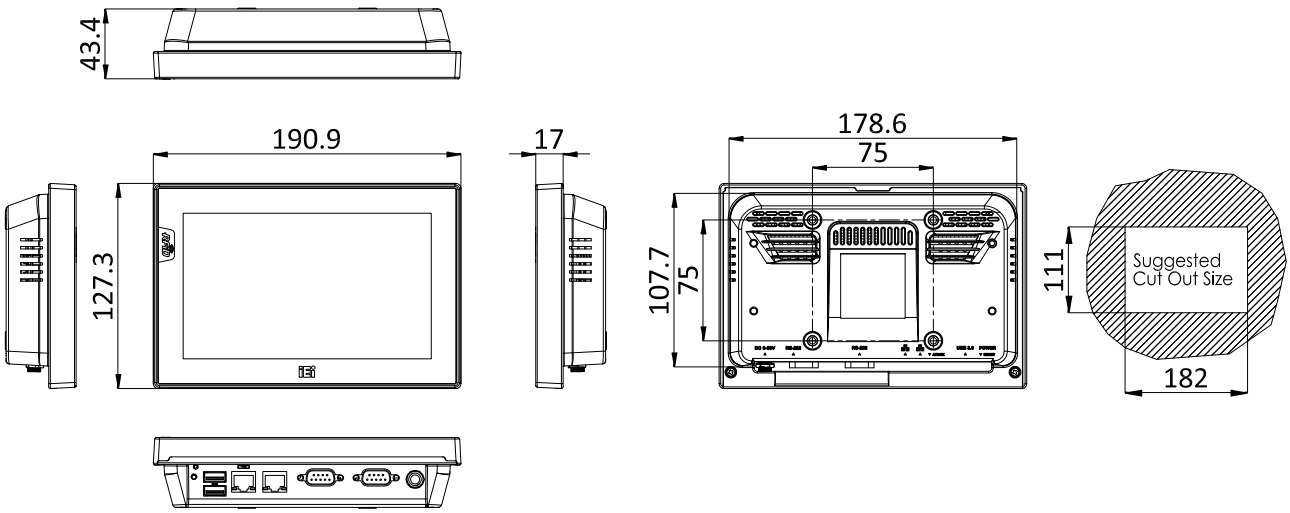

AFL3-08A-BT Dimensions (Unit: mm)

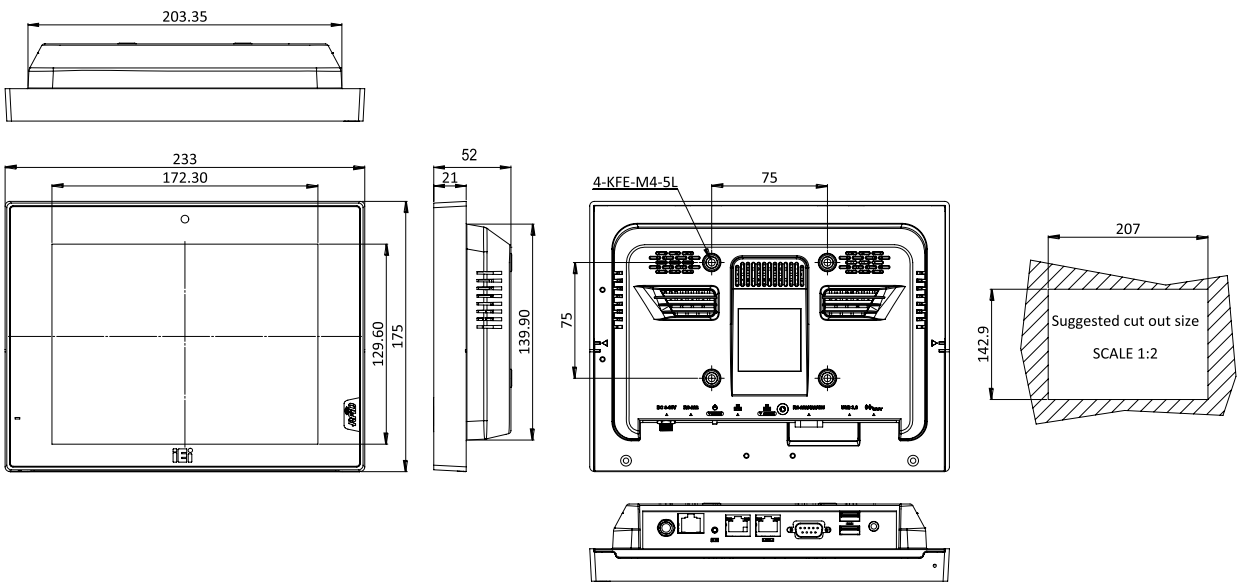

AFL3-W10A-BT

Intel® Celeron® J1900 (Quad Core, 2.0 GHz)

AFL3-12A-BT

Intel® Celeron® J1900 (Quad Core, 2.0 GHz)

AFL3-12C-ULT3

Intel® Core™ i5 and Celeron® ULT Processor



Features

- W10”~12.1” light industrial interactive panel PC
- Wide range DC input with lockable DC jack
- Selectable AT/ATX power mode
- Built-in speakers
- One mSATA slot
- IP64 compliant front panel
- IEI One Key Recovery solution alllows you to create rapid OS backup and recovery (suggested with over 4GB storage capacity)



Specifications

Model		AFL3-W10A-BT	AFL3-12A-BT	AFL3-12C-ULT3
LCD	Size	10.1”	12.1”	12.1”
	Resolution	1280 x 800 (16:10)	1024 x 768 (4:3)	1024 x 768 (4:3)
	Brightness (cd/m²)	350	500	500
	Contrast Ratio	800:1	700:1	700:1
	LCD Color	16.2M	16.2M	16.2M
	Pixel Pitch (mm)	0.1695 (H)×0.1695 (V)	0.240 (H) x 0.240 (V)	0.240 (H) x 0.240 (V)
	Viewing Angle (H-V)	170º / 170º	160º / 160º	160º / 160º
	Backlight MTBF(hrs)	15000 hrs	50000 hrs	50000 hrs
Touch	Touch Screen	Projected capacitive with USB interface (anti-UV / anti-glare coating)	5-wire resistive with RS-232 interface (anti-glare coating) Projected capacitive with USB interface (anti-UV / anti-glare coating)	Projected capacitive with USB interface (anti-UV / anti-glare coating)
	Touch Controller	EETI EXC3146	PenMount DMC9000/ EETI EXC3146	EETI EXC3180
Motherboard	CPU	Intel® Celeron® J1900 (quad core, 2.0 GHz)	Intel® Celeron® J1900 (quad core, 2.0 GHz)	6th Generation Intel® Core™ i5 on-board processor
	RAM	One 204-pin 2 GB 1333MHz single-channel, 2GB DDR3L SO-DIMM pre-installed (system max. 8GB)	One 204-pin 2 GB 1333MHz single-channel, 2GB DDR3L SO-DIMM pre-installed (system max. 8GB)	One 260-pin 2133MHz single-channel, 4GB DDR4 SO-DIMM pre-installed (system max. 8GB)
	Ethernet	2 x PCIe GbE by RTL8111HN-CG controller	2 x PCIe GbE by RTL8111HN-CG controller	2 x PCIe GbE by Intel® i211 controller
	Audio Codec	ALC888S		
Storage		1 x mSATA	1 x mSATA (E-Window) 1 x 2.5” SATA 3Gb/s HDD bay	1 x mSATA (E-Window) 1 x 2.5” SATA 3Gb/s HDD bay
I/O Ports & Switch		1 x RS-232 COM port (RJ-45 connector) 1 x RS-232/422/485 COM port (DB-9 connector) (RI/5V/12V) 2 x USB 3.2 Gen 1 (5Gb/s) 2 x USB 2.0 2 x RJ-45 for GbE LAN 1 x Power switch 1 x Audio port (line-out) 1 x Reset button 1 x AT/ATX switch 1 x 9-30V DC lockable power jack	1 x RS-232 COM port (RJ-45 connector) 1 x RS-232/422/485 COM port (DB-9 connector)(RI/5V/12V) 2 x USB 3.2 Gen 1 (5Gb/s) 2 x USB 2.0 2 x RJ-45 for GbE LAN 1 x Power switch 1 x Audio port (line-out) 1 x Reset button 1 x AT/ATX switch 1 x 9-30V lockable power jack	1 x RS-232/422/485 (DB-9) 1 x RS232 (RJ-45) 2 x GbE LAN 2 x USB 2.0 2 x USB 3.2 Gen 1 (5Gb/s) 1 x DC jack (12-30V DC) 1 x HDMI 1 x Power switch 1 x Reset button 1 x AT/ATX switch
E-Window Expansion		N/A	Yes, optional (full-size mini-PCIe slot with PCIe or SATA / USB signal)	Yes, optional (full-size mini-PCIe slot with PCIe or SATA / USB signal)
Audio		AMP 2W + 2W (internal speaker)	AMP 3W + 3W (internal speaker)	AMP 3W + 3W (internal speaker)
Camera and Microphone		2-megapixel with low light function, digital microphone		
Wireless		IEEE 802.11 a/b/g/n/ac / Bluetooth 4.2 half-size mini-PCIe slot (PCIe / USB signal)	IEEE 802.11 a/b/g/n/ac half-size mini-PCIe slot (PCIe signal)	IEEE 802.11 a/b/g/n/ac, Bluetooth V4.1 M.2 slot A+E key 2230 slot (PCIe/USB signal)
OSD Function		Software OSD		
Physical	Front Panel Construction	PC + ABS Plastic		
	Mounting	Panel, Wall, Stand, Arm VESA 75mm x 75mm	Panel, Wall, Rack, Stand and Arm VESA 75mm x 75mm / 100mm x 100mm	Panel, Wall, Stand and Arm VESA 75mm x 75mm / VESA 100mm x 100mm
	Color	Black C		
	Dimensions (WxHxD) (mm)	262 x 181 x 42	304 x 243 x 44	304 x 243 x 58
	Cut-out Dimensions (WxH) (mm)	236 x 149	243 x 205	272 x 223
	Net/Gross Weight (kgs)	1.06/2.58	1.92/3.95	3/5.03
Environment	Operating Temperature (Ambient with air flow)	-10°C~50°C	-20°C~50°C	-20°C ~ 50°C
	Storage Temperature	-20°C~60°C	-20°C~60°C	-30°C ~ 60°C
	Humidity	10% to 95% (non-condensing)		
	IP Level	IP 64 compliant front panel		
	Safety&EMC	CE / FCC		CE , FCC , ErP 2009/125/EC
	Thermal Solution	Fanless		
Power	Power Requirement	9 V ~ 30 V DC		12 V ~ 30 V DC
	Power Consumption	12V@2.3A (Intel® J1900 CPU with 2GB 1333 MHz DDR3L memory)	12V@3.58A (Intel® J1900 CPU with 2GB 1333 MHz DDR3L memory)	12V@6A (Intel® Core™ i5-6300U CPU with 4GB DDR4 2133 MHz DDR4 memory)

Ordering Information

Part No.	Description
AFL3-W10A-BT-J1/PC/2G-R14	10.1" 350cd/m² 1280x800 fanless panel PC with Intel® Celeron® J1900 quad core 2 GHz, 802.11 a/b/g/n/ac wireless module, projected capacitive touch screen, 2GB DDR3L RAM , with AG, 2-megapixel camera, microphone, R14
AFL3-12A-BT-J1/PC/2G-R15	12.1" 500 cd/m² XGA fanless panel PC with Intel® Celeron® J1900 quad core 2 GHz, 802.11a/b/g/n/ac wireless module, projected capacitive touch screen, 2GB DDR3L RAM , with AG, 2-megapixel camera, microphone, R15
AFL3-12A-BT-J1/R/2G-R15	12.1" 500 cd/m² XGA fanless panel PC with Intel® Celeron® J1900 quad core 2 GHz, 802.11a/b/g/n/ac wireless module, resistive touch screen, 2GB DDR3L RAM , with AG, 2-megapixel camera, microphone, R15
AFL3-12A-BT-J1/PC/4G-R15	12.1" 500 cd/m² XGA fanless panel PC with Intel® Celeron® J1900 quad core 2 GHz, 802.11a/b/g/n/ac wireless module, projected capacitive touch screen, 4GB DDR3L RAM , with AG, R15
AFL3-12A-BT-J1/R/4G-R15	12.1" 500 cd/m² XGA fanless panel PC with Intel® Celeron® J1900 quad core 2 GHz, 802.11a/b/g/n/ac wireless module, resistive touch screen, 4GB DDR3L RAM , with AG, R15
AFL3-12C-ULT3-i5/PC/4G-R11	12.1" 500 cd/m² 1024 x 768 panel PC with 6th generation 14nm Intel® mobile Core™ i5-6300U (15W) on-board processor (ULT), one 4GB DDR4 RAM, 802.11a/b/g/n/ac Wi-Fi module, PCAP touch, 2-megapixel camera, microphone, R11

Options

Item	AFL3-W10A-BT	AFL3-12A-BT	AFL3-12C-ULT3
Panel Mounting Kit	AFL3PK-08A-R10		
Wall Mounting Kit	AFLWK-12	AFLWK-19B	AFLWK-19B
Rack Mounting Kit	AFL3RK-W10A-R10	AFL3RK-12A-R10	AFL3RK-12A-R10
Arm	ARM-11-RS/ARM-31-RS		
Stand	STAND-C12-R10	STAND-A12-RS/STAND-C12-R10/ STAND-100-RS	STAND-A12-RS/STAND-C12-R10/ STAND-100-RS
V-Stand	VSTAND-A10-R11	VSTAND-A12-R11	VSTAND-A12-R11
Magnetic Card Reader	AFL3P-W10MSR-U-R10		
Barcode Scanner	AFL3-2D-R11		
RFID Reader **(13.56 MHz Mifare Type) for ATO assembly	AFL3-MF-RFID-KIT02-R10	AFL3-MF-RFID-KIT02-R10**	AFL3-MF-RFID-KIT02-R10
*OS: Win 7 Embedded (64-bit)	AFL3-W07A-BT-WES7P64-R12* (for PCAP touch)	AFL3-W07A-BT-WES7P64-R12* (for PCAP touch) AFL3-W07A-BT-WES7E64-R12* (for Resistive touch)	AFL3-12C-ULT3-WES7P64-R10* (for PCAP touch) AFL3-12C-ULT3-WES7E64-R10* (for Resistive touch)
*OS: Win 10 IOT Enterprise	AFL3-W07A-BT-W10E64-E-R12		AFL3-12C-ULT3-W10E64-V-R10

**RFID is supported from AFL3-xxA-BT R11 version
*OS image with CD-ROM without storage

E-Window (for ATO assembly)

Part No.	Description	Supported Model
E-MPCIE-LAN-R10	PCIe Mini card supports 1-port GbE with Realtek RTL8111HN-CG controller, with PMS 194C I/O bracket and 250mm cable, R10	AFL3-12A-BT-J1/PC/2G-R15 AFL3-12A-BT-J1/R/2G-R15 AFL3-12A-BT-J1/PC/4G-R15 AFL3-12A-BT-J1/R/4G-R15 AFL3-12C-ULT3-i5/PC/4G-R11
E-MPCIE-DLAN-R10	PCIe Mini card supports 2-port GbE with Intel I211 controller, with PMS 194C I/O bracket and 250mm cable, R10	
E-MPCIE-3G-R10	PCIe Mini card supports 3G WWAN, with PMS 130C I/O bracket, 300mm RF antenna cable and GSM antenna cable, R10	

Packing List

Item	Part No.	Q'ty	Remark
Round head machine screw	44003-020041-RS (12A-BT)	2	M2*4 round head machine screw
Pan head machine screw	44403-040061-RS	4	M4*6 pan head machine screw
Fix holder	46003-009500-RS	2	
Power adapter	63040-010036-210-RS (AFL3-W10A-BT) 63040-010060-211-RS (AFL3-12A-BT)	1	36W; Vin: 90V~264V AC; Vout: 12VDC 60W; Vin: 90V~264V AC; Vout: 12VDC
	63040-010096-110-RS (AFL3-12C-ULT3)		96W; Vin: 90V~264V AC; Vout: 12VDC
RJ-45 to DB-9 COM port transfer cable	32005-004600-100-RS	1	300mm, 26AWG, (A) D-SUB 9 male, (B) RJ-45

AFL3-W10A-BT
Fully Integrated I/O

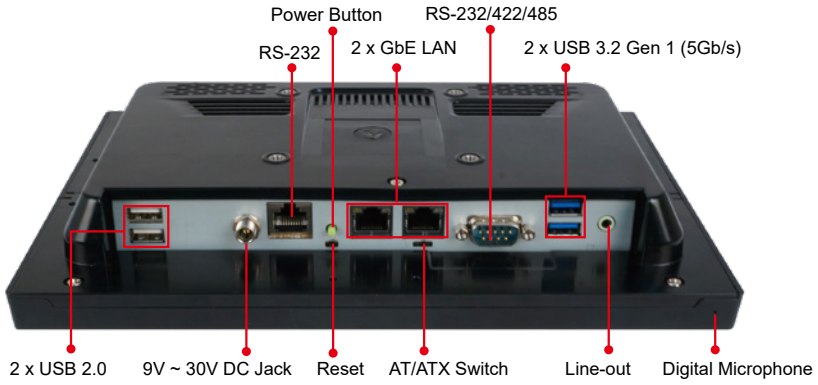

AFL3-12A-BT
Fully Integrated I/O

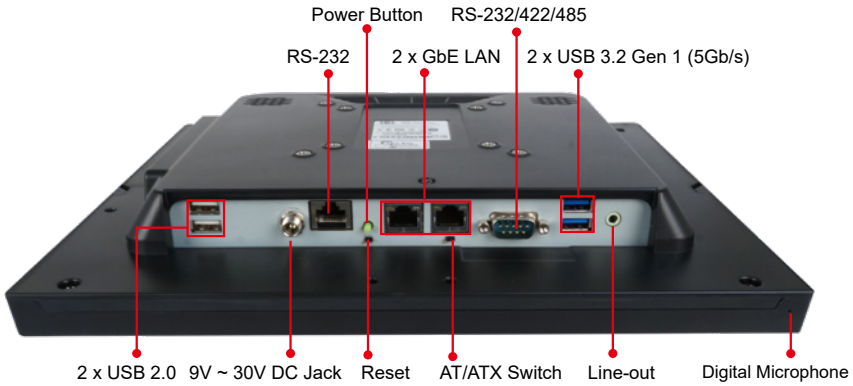

AFL3-12C-ULT3
Fully Integrated I/O

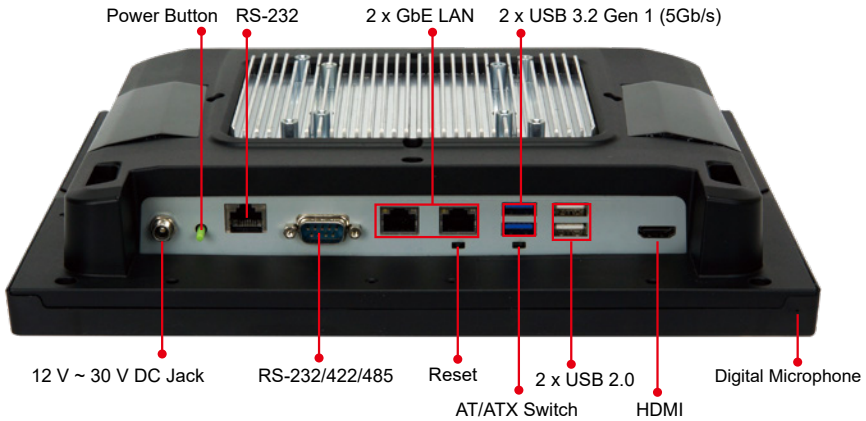

AFL3PK-08A-R10
Panel Mounting Kit Dimensions (Unit: mm)

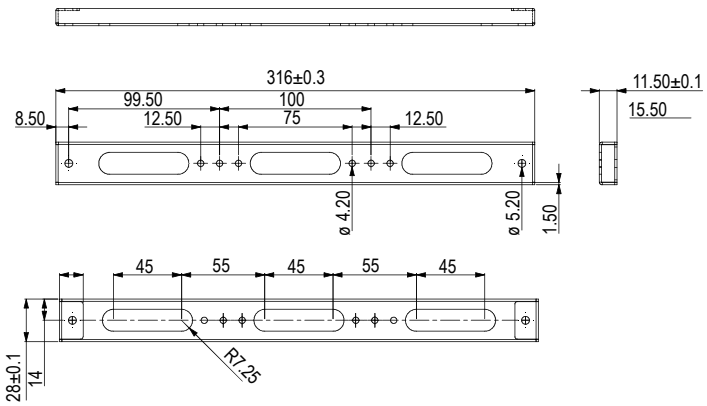

AFL3-W10A-BT Dimensions (Unit: mm)

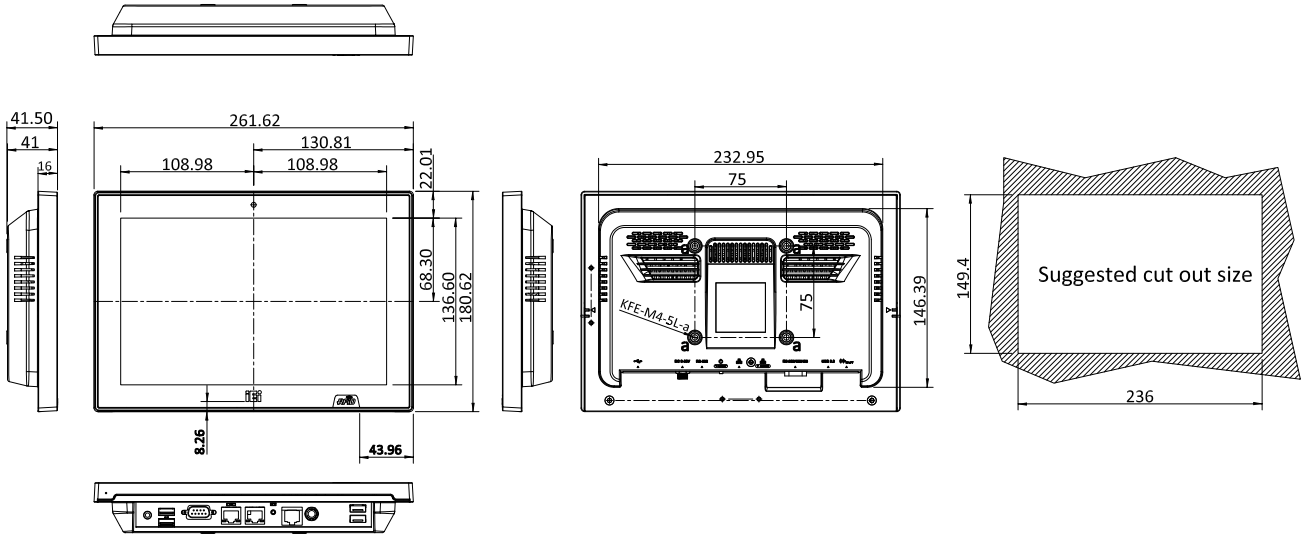

AFL3-12A-BT Dimensions (Unit: mm)

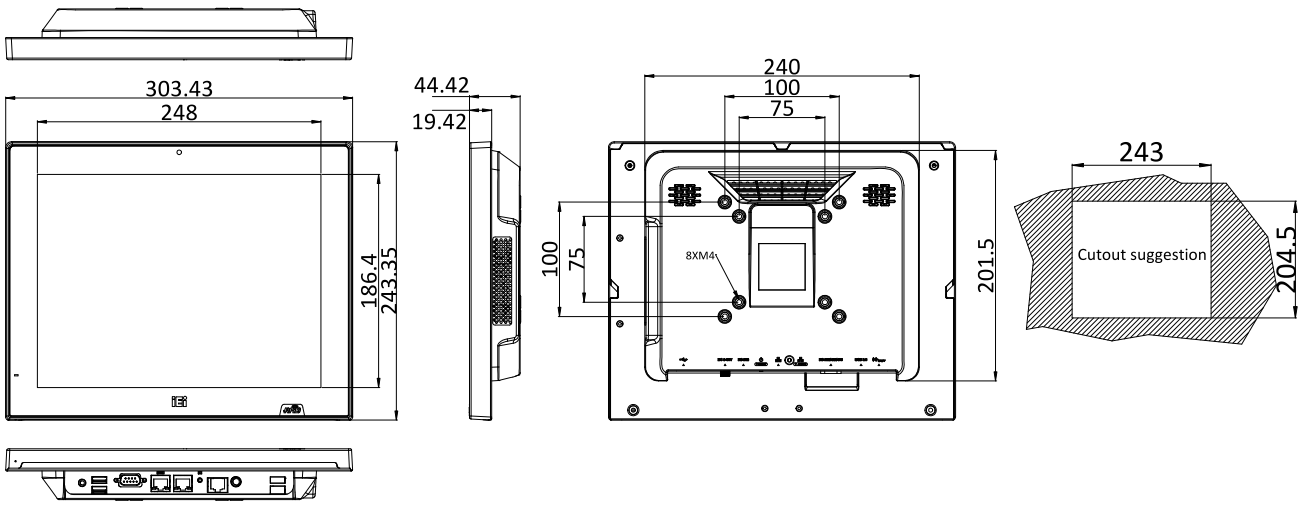

AFL3-12C-ULT3 Dimensions (Unit: mm)

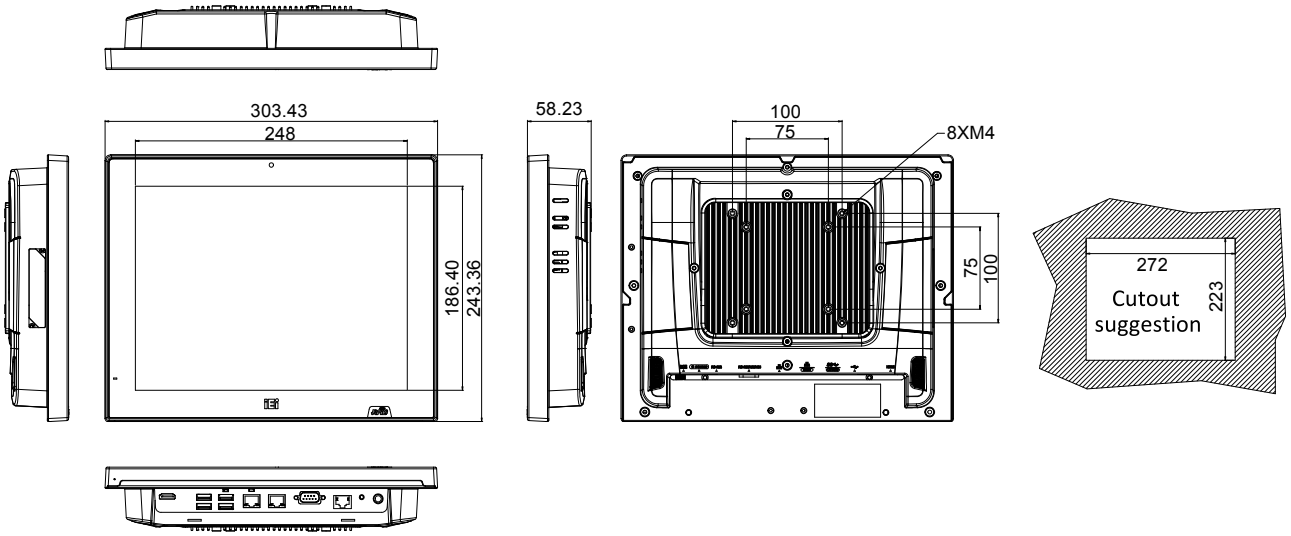

AFL3-W15A-BT

Intel® Celeron® J1900 (Quad Core, 2.0 GHz)

AFL3-W15C-ULT3

Intel® Core™ i5 and Celeron® ULT Processor



Features

- W15" light industrial interactive panel PC
- 9 V ~ 30 V wide range DC power input
- Selectable AT/ATX power mode
- Built-in speakers
- One mSATA slot
- IP64 compliant front panel
- IEI One Key Recovery solution alllows you to create rapid OS backup and recovery (suggested with over 4GB storage capacity)



Specifications

Model		AFL3-W15A-BT	AFL3-W15C-ULT3
LCD	Size	15.6"	
	Resolution	1366 x 768 (16:9)	
	Brightness (cd/m²)	400	
	Contrast Ratio	500:1	
	LCD Color	16.2M	
	Pixel Pitch (mm)	0.240 (H) x 0.240 (V)	
	Viewing Angle (H-V)	170° / 160°	
	Backlight MTBF(hrs)	50000 (LED backlight)	
Touch	Touch Screen	5-wire resistive with RS-232 interface (anti-glare coating), Projected capacitive with USB interface (anti-UV / anti-glare coating)	Projected capacitive with USB interface (anti-UV / anti-glare coating)
	Touch Controller	PenMount DMC9000 / EETI EXC3188	PenMount DMC9000 / EETI EXC3188
Motherboard	CPU / Chipset	Intel® Celeron® J1900 (quad core, 2 GHz)	6th Generation Intel® Core™ i5 and Celeron® on-board processor
	RAM	One 204-pin 1333 MHz single-channel DDR3L SO-DIMM, 2GB pre-installed (system max. 8GB)	Two 260-pin 2133/1867 MHz dual-channel DDR4 SO-DIMMs (system max. 32 GB)
	Ethernet	2 x PCIe GbE by RTL8111HN-CG controller	2 x Intel® I211 PCIe GbE controller
	Audio Codec	ALC888S	
Storage		1 x mSATA (E-Window) 1 x 2.5" SATA 3Gb/s HDD bay	1 x mSATA (E-Window) 1 x 2.5" SATA 3Gb/s HDD bay 1 x M.2 M key PCIe (2280 or 22110 PCIe signa)
I/O Ports & Switch		1 x RS-232 COM port (RJ-45 connector) 1 x RS-232/422/485 COM port (DB-9 connector) (RI/5V/12V) 2 x USB 2.0 2 x USB 3.2 Gen 1 (5Gb/s) 2 x GbE LAN 1 x Power switch 1 x Reset button 1 x AT/ATX switch 1 x Audio port (line-out) 1 x 9-30V lockable power jack	1 x RS-232 by DB-9 (RI/5V/12V) 1 x RS-232/422/485 by DB-9 (RI/5V/12V) 2 x GbE LAN 4 x USB 3.2 Gen 1 (5Gb/s) 1 x HDMI output 1 x Power switch 1 x Reset button 1 x AT/ATX switch 1 x 9-30V lockable power jack
E-Window Expansion		Yes, optional(full-size mini-PCIe slot with PCIe or SATA / USB signal)	Yes, optional (full-size mini-PCIe slot with PCIe or SATA / USB signal)
Audio		AMP 3W + 3W (internal speakers)	
Camera and Microphone		2-megapixel with low light function, digital microphone	
Wireless & Bluetooth		IEEE 802.11 a/b/g/n/ac half-size mini-PCIe slot (PCIe signal)	IEEE 802.11 a/b/g/n/ac, Bluetooth V4.1 M.2 slot A+E key 2230 slot (PCIe/USB signal)
OSD Function		Software OSD	
Physical	Front Panel Construction	PC + ABS Plastic	
	Mounting	Panel, Wall, Rack, Stand and Arm VESA 75mm x 75mm / 100mm x 100mm	
	Color	Black C	
	Dimensions (WxHxD) (mm)	396 x 250 x 53	396 x 250 x 64
	Cut-out Dimensions (WxH) (mm)	273 x 226	369 x 226
	Net/Gross Weight (kgs)	3.3/5.6	4.5/6.5
Environment	Operating Temperature (°C) (Ambient with air flow)	-20°C~50°C	-20°C~50°C
	Storage Temperature (°C)	-20°C~60°C	
	Humidity	10% to 95% (non-condensing)	
	IP Level	IP 64 compliant front panel	
	Safety & EMC	CE / FCC	
	Thermal Solution	Fanless	Fanless
Power	Power Requirement	9 V ~ 30 V	
	Power Consumption	12V@4.16A (Intel® J1900 CPU with 2GB 1333 MHz DDR3 memory)	12V@.6A (Intel® Core™ i5-6300U CPU with 4GB DDR4 2133 MHz DDR4 memory)

Ordering Information

• Intel® Celeron® Platform

Part No.	Description
AFL3-W15A-BT-J1/PC/2G-R15	Wide 15.6" 400 cd/m² 1366 x 768 fanless panel PC with Intel® Celeron® J1900 quad core 2 GHz, 802.11a/b/g/n/ac, projected capacitive touch screen, 2GB DDR3L RAM, 2-megapixel camera, microphone, R15
AFL3-W15A-BT-J1/R/2G-R15	Wide 15.6" 400 cd/m² 1366 x 768 fanless panel PC with Intel® Celeron® J1900 quad core 2 GHz, 802.11a/b/g/n/ac, resistive touch window, 2GB DDR3L RAM, 2-megapixel camera, microphone, R15
AFL3-W15A-BT-J1/PC/4G-R15	Wide 15.6" 400 cd/m² 1366x768 fanless panel PC with Intel® Celeron® J1900 quad core 2 GHz, 802.11a/b/g/n/ac wireless module, projected capacitive touch screen, 4GB DDR3L RAM , with AG, R15
AFL3-W15A-BT-J1/R/4G-R15	Wide 15.6" 400 cd/m² 1366x768 fanless panel PC with Intel® Celeron® J1900 quad core 2 GHz, 802.11a/b/g/n/ac wireless module, resistive touch window, 4GB DDR3L RAM , with AG, R15

• Intel® Skylake ULT3 Platform

Part No.	Description
AFL3-W15C-ULT3-C/PC/4G-R14	Wide 15.6" 400 cd/m² 1366 x 768 Panel PC with Intel® 14nm 6th Generation Mobile Celeron®3955U (15W) on-board Processor (ULT), 1*4GB DDR4 RAM, 802.11a/b/g/n/ac WiFi module, PCAP touch, 2M camera, microphone,with AG, R14
AFL3-W15C-ULT3-i5/PC/4G-R14	Wide 15.6" 400 cd/m² 1366 x 768 Panel PC with Intel® 14nm 6th Generation Mobile Core™ i5-6300U (15W) on-board Processor (ULT), 1*4GB DDR4 RAM, 802.11a/b/g/n/ac WiFi module, PCAP touch, 2M camera, microphone , with AG, R14

Packing List

Item	Part No.	Q'ty	Remark
Round head machine screw	44003-020041-RS (W15A-BT/15B-H81)	4	M2*4 round head machine screw
Pan head machine screw	44403-040061-RS	4	M4*6 pan head machine screw
Fix holder	46003-009500-RS	2	
Power adapter	63040-010060-211-RS (AFL3-W15A-BT) 63040-010096-200-RS (AFL3-W15C-ULT3)	1	60W; Vin: 90V~264V AC; Vout: 12VDC
	63040-010096-100-RS	1	96W; Vin: 90V~264V AC; Vout: 12VDC
RJ-45 to DB-9 COM port transfer cable	32005-004600-100-RS(W15A-BT)	1	300mm, 26AWG, (A) D-SUB 9 male, (B) RJ-45

Options

Item	AFL3-W15A-BT	AFL3-W15C-ULT3
Panel Mounting Kit	AFL3PK-W15A-R10	AFL3PK-W15A-R10
Wall Mounting Kit	AFLWK-19B	
Rack Mounting Kit	AFL3RK-W15A-R11	AFL3RK-W15B-R10
Arm	ARM-11-RS/ARM-31-RS	
Stand	STAND-A21-R10/ STAND-210-R11/STAND-A19-RS/STAND-C19-R10	
Magnetic Card Reader	AFL3P-W10MSR-U-R10	
Barcode Scanner	AFL3-2D-R11	
RFID Reader (13.56 MHz Mifare Type) (for ATO assembly)	AFL3-MF-RFID-KIT02-R10**	AFL3-MF-RFID-KIT02-R10
*OS: Win 7 Embedded (64-bit)	AFL3-W07A-BT-WES7P64-R12 (for PCAP touch) AFL3-W07A-BT-WES7E64-R12 (for resistive touch)	AFL3-W15C-ULT3-WES7P64-R10 (for PCAP touch) AFL3-W15C-ULT3-WES7E64-R10 (for resistive touch)
*OS: Win 10 IoT Enterprise (64-bit)	AFL3-W07A-BT-W10E64-E-R12	AFL3-W15C-ULT3-W10E64-V-R10

**RFID is supported after AFL3-xxA-BT R11 version
*OS image with CD-ROM without storage

• E-Window (for ATO assembly)

Part No.	Description	Supported Model
E-MPCIE-LAN-R10	PCIe Mini card supports 1-port GbE with Realtek RTL8111HN-CG controller, with PMS 194C I/O bracket and 250mm cable, R10	AFL3-W15A-BT-J1/PC/2G-R15* AFL3-W15A-BT-J1/R/2G-R15* AFL3-W15A-BT-J1/PC/4G-R15* AFL3-W15A-BT-J1/R/4G-R15* AFL3-W15C-ULT3-C/PC/4G-R14 AFL3-W15C-ULT3-i5/PC/4G-R14
E-MPCIE-DLAN-R10	PCIe Mini card supports 2-port GbE with Intel I211 controller, with PMS 194C I/O bracket and 250mm cable, R10	
E-MPCIE-3G-R10	PCIe Mini card supports 3G WWAN module , with PMS 130C I/O bracket, RF antenna 300mm cable and GSM antenna cable, R10	

*Installation E-MPCIE-LAN-R10 & E-MPCIE-DLAN-R10 after remove AFL3-USBHUB-R10



E-Window

E-MPCIE-CAN-R10	E-MPCIE-DLAN-R10	E-MPCIE-3G-R10
	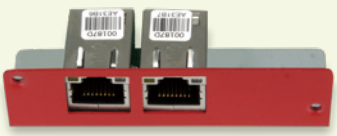	

AFL3-W15A-BT
Fully Integrated I/O

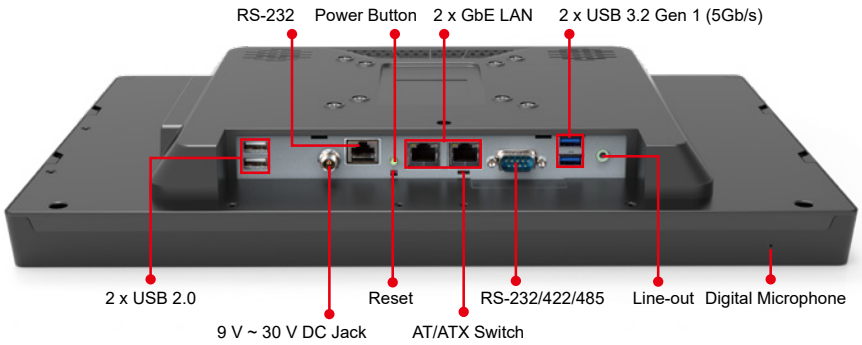

AFL3-W15C-ULT3
Fully Integrated I/O

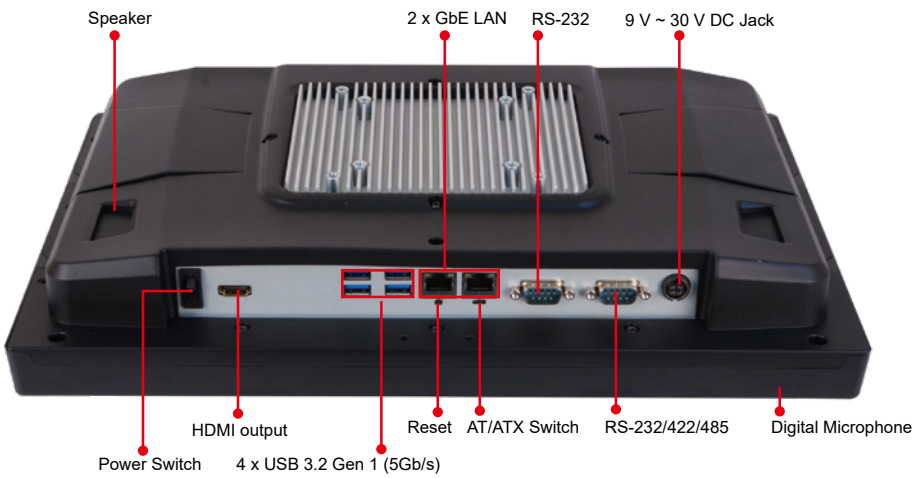

AFL3PK-W15A-R10
Panel Mounting Kit Dimensions (Unit: mm)

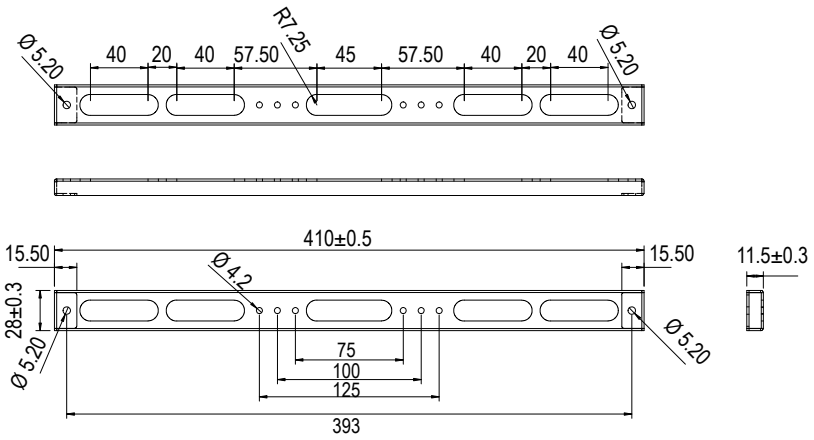

AFL3-W15A-BT Dimensions (Unit: mm)

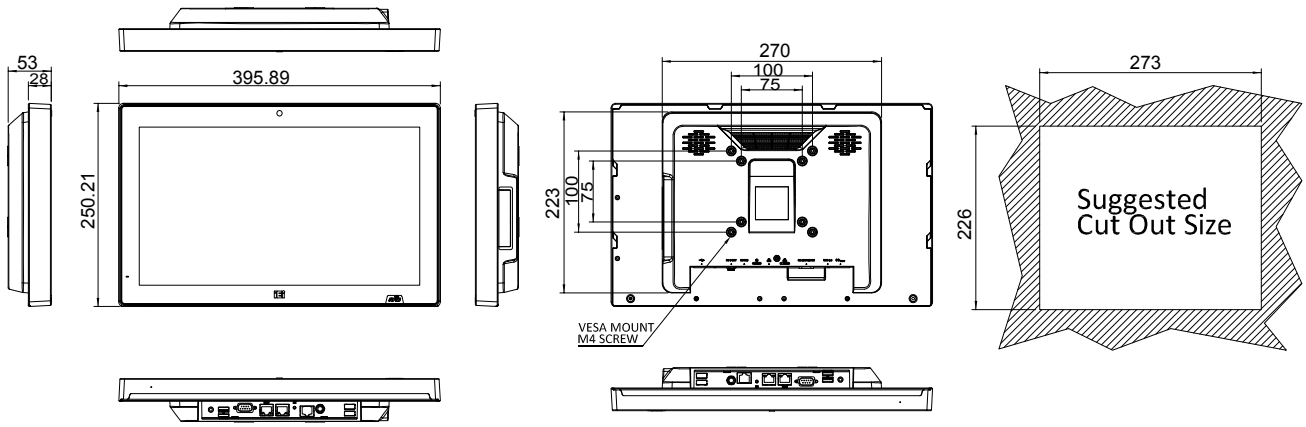

AFL3-W15C-ULT3 Dimensions (Unit: mm)

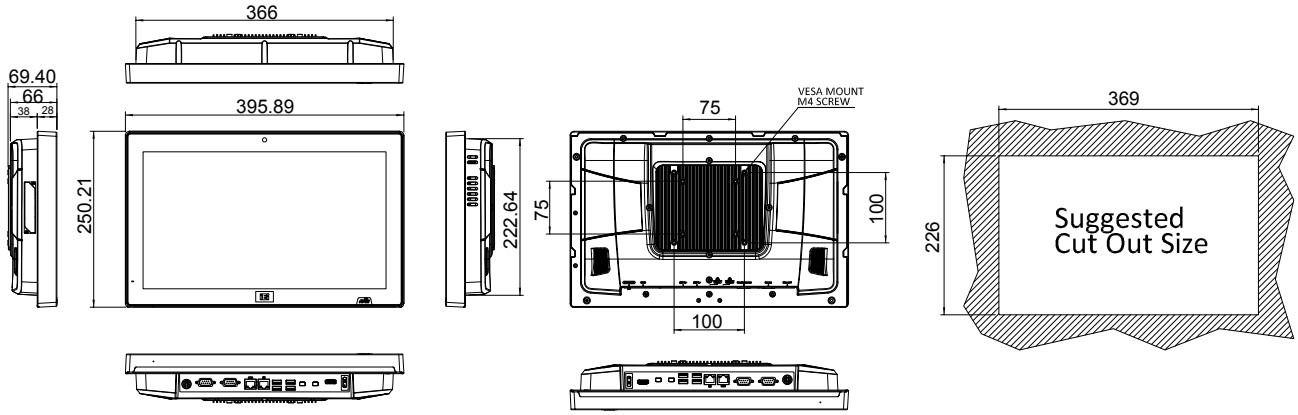

AFL3-W19C-ULT3

Intel® Core™ i5 and Celeron® ULT Processor

AFL3-W19A-AL

Intel® Celeron® / Atom™ Apollo Lake Processor

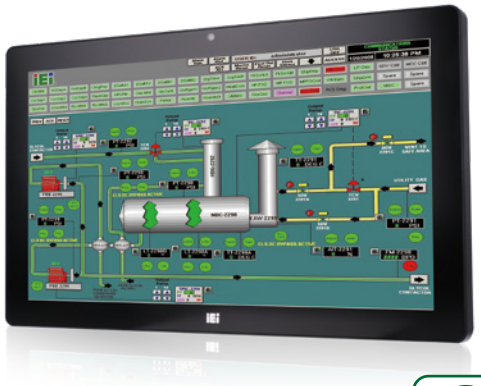

Features

- 18.5" light industrial interactive panel PC
- Wide range DC power input
- Selectable AT/ATX power mode
- Built-in speakers
- One mSATA slot
- IP64 compliant front panel
- IEI One Key Recovery solution alllows you to create rapid OS backup and recovery (suggested with over 4GB storage capacity)



Specifications

Model		AFL3-W19C-ULT3	AFL3-W19A-AL
LCD	Size	18.5"	18.5"
	Resolution	1366 x 768 (16:9)	1366 x 768 (16:9)
	Brightness (cd/m²)	250	250
	Contrast Ratio	1000:1	1000:1
	LCD Color	16.7M	262K
	Pixel Pitch (mm)	0.240 (H) x 0.240 (V)	0.240 (H) x 0.240 (V)
	Viewing Angle (H-V)	170°/160°	170°/160°
	Backlight MTBF(hrs)	30,000 (LED backlight panel)	30,000 (LED backlight panel)
Touch	Touch Screen	Projected capacitive with USB interface (anti-UV / anti-glare coating)	
	Touch Controller	EETI EXC3180	EETI EXC3188
Motherboard	CPU	Intel® Core™ i5 and Celeron® ULT Processor	Intel® Celeron® J3455 (quad core, 1.5GHz up to 2.3 GHz)
	RAM	Two 260-pin 2133/1867 MHz dual-channel DDR4 SO-DIMMs (system max. 32 GB)	One 204-pin 1600/1333 MHz single-channel DDR3L SO-DIMM, 4GB pre-installed (system max. 8GB)
	Ethernet	2 x Intel® I211-AT PCIe GbE controller	2 x PCIe GbE by Intel® i211 controller
	Audio Codec	ALC888S	ALC269
Storage		1 x mSATA (E-Window) 1 x 2.5" SATA 3Gb/s HDD bay 1 x M.2 M key PCIe (2280 or 22110 PCIe signa)	1 x mSATA (E-Window) 1 x 2.5" SATA 3Gb/s HDD bay
I/O Ports & Switch		1 x RS-232 by DB-9 (RI/5V/12V) 1 x RS-232/422/485 by DB-9 (RI/5V/12V) 2 x GbE LAN 4 x USB 3.2 Gen 1 (5Gb/s) 1 x HDMI output 1 x Power switch 1 x Reset button 1 x AT/ATX switch 1 x 9V ~ 30V lockable power jack	1 x RS-232/422/485 by RJ-45 1 x RS-232 by RJ-45 2 x GbE LAN 2 x USB 3.2 Gen 1 (5Gb/s) 2 x USB 2.0 1 x HDMI output 1 x 12V ~ 34V DC Jack 1 x Power switch 1 x AT/ATX switch 1 x Line out
E-Window Expansion		Yes, optional (full-size mini-PCIe slot with PCIe or SATA / USB signal)	
Audio		AMP 3W + 3W (internal speaker)	
Camera and Microphone		2-megapixel with low light function, digital microphone	2-megapixel with low light function, digital microphone
Wireless & Bluetooth		IEEE 802.11 a/b/g/n/ac, Bluetooth V4.1 M.2 slot A+E key 2230 slot (PCIe/USB signal)	
OSD Function		Software OSD	
Physical	Front Panel Construction	PC + ABS Plastic	PC + ABS Plastic
	Mounting	Panel, Wall, Stand and Arm VESA 75mm x 75mm / 100mm x 100mm	Panel, Wall, Stand and Arm VESA 100mm x 100mm
	Color	Black C	Black C
	Dimensions (W x H x D) (mm)	470 x 290 x 70	470 x 280 x 60
	Cut-out Dimensions (W x H) (mm)	443 x 261	418 x 230
	Net/Gross Weight (kgs)	7.3/10	6.3/9
Environment	Operating Temperature (Ambient with air flow)	-20°C ~ 50°C	-15°C ~ 50°C
	Storage Temperature	-20°C ~ 60°C	
	Humidity	10% to 95% (non-condensing)	
	IP Level	IP 64 compliant front panel	
	Safety & EMC	CE / FCC	
	Thermal Solution	Fanless	
Power	Power Requirement	9V ~ 30V DC	12V ~ 34V DC
	Power Consumption	12V@7.1A (Intel® Core™ i5-6300U CPU with 4GB DDR4 2133 MHz DDR4 memory)	12V@3.2A (Intel® Celeron J3455 CPU with 4GB DDR3L 1866 MHz DDR3L memory)

Ordering Information

Part No.	Description
AFL3-W19C-ULT3-C/PC/4G-R14	Wide 18.5" 250 cd/m² 1366 x 768 Panel PC with withIntel® 14nm 6th Generation Mobile Celeron® 3955U (15W) on-board Processor (ULT), 1*4GB DDR4 RAM, 802.11a/b/g/n/ac WiFi module, PCAP touch, 2 M camera, microphone, R14
AFL3-W19C-ULT3-i5/PC/4G-R14	Wide 18.5" 250 cd/m² 1366 x 768 Panel PC with Intel® 14nm 6th Generation Mobile Core™ i5-6300U (15W) on-board Processor (ULT), 1*4GB DDR4 RAM, 802.11a/b/g/n/ac WiFi module, PCAP touch, 2 M camera, microphone, R14
AFL3-W19A-AL-J2/PC/4G-R10	Wide 18.5" 250 cd/m² 1366 x 768 Panel PC with with Intel® Celeron® Processor J3455 (10W) on-board Processor (Apollo lake), 1*4GB DDR3L RAM, 802.11a/b/g/n/ac WiFi module, PCAP touch, 2 M camera, microphone, R10

Options

Item	AFL3-W19C-ULT3	AFL3-W19A-AL
Panel Mounting Kit	AFL3PK-W19C-R10	
Wall Mounting Kit	AFLWK-19B	
Arm	ARM-11-RS/ARM-31-RS	
Stand	STAND-A21-R10/ STAND-210-R11/STAND-A19-RS/STAND-C19-R10	
Magnetic Card Reader	AFL3P-W10MSR-U-R10	
Barcode Scanner	AFL3-2D-R11	
RFID Reader (13.56 MHz Mifare Type) (For ATO assembly)	AFL3-MF-RFID-KIT02-R10	
*OS: Win 7 Embedded (64-bit)	AFL3-W15C-ULT3-WES7P64-R10	N/A
*OS: Win 10 IOT Enterprise (64-bit)	AFL3-W15C-ULT3-W10E64-V-R10	AFL3-W19A-AL-W10E64-E-R10

*OS image with CD-ROM without storage

E-Window (for ATO assembly) E-Window

Part No.	Description
E-MPCIE-LAN02-R10	PCIe Mini card supports 1-port GbE with Realtek RTL8111HN-CG controller, with PMS 194C I/O bracket and 340 mm cable, R10
E-MPCIE-3G-R10	PCIe Mini card supports 3G WWAN, with PMS 130C I/O bracket, RF antenna 300mm cable and GSM antenna cable, R10

Packing List

Item	Part No.	Q'ty	Remark
Round head machine screw	44403-040061-RS	4	M2*4 round head machine screw
Pan head machine screw	44003-030052-RS	4	M4*6 pan head machine screw
Power adapter	63040-010096-100-RS (AFL3-W19C-ULT3) 63040-010060-120-RS (AFL3-W19A-AL)	1	96W; Vin: 90V~264V AC; Vout: 12VDC 60W; Vin: 90V~264V AC; Vout: 12VDC
RJ-45 to DB-9 COM port transfer cable	32005-004600-100-RS (AFL3-W19A-AL)	1	300mm, 26AWG, (A) D-SUB 9 male, (B) RJ-45

AFL3PK-W19C-R10
Panel Mounting Kit Dimensions (Unit: mm)

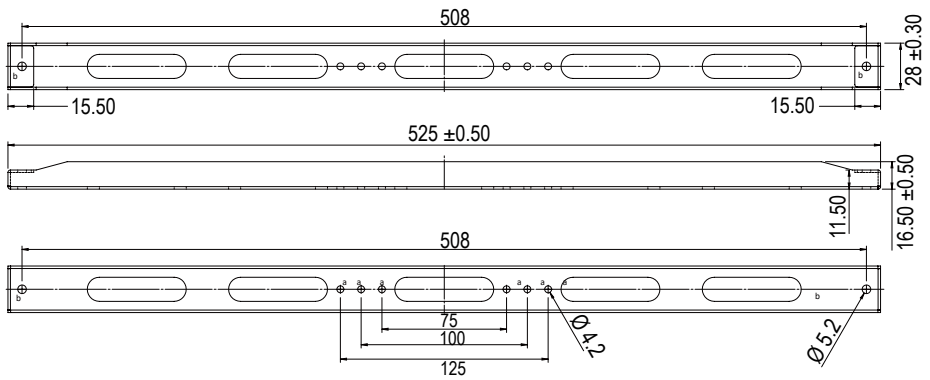

AFL3-W19C-ULT3
Fully Integrated I/O

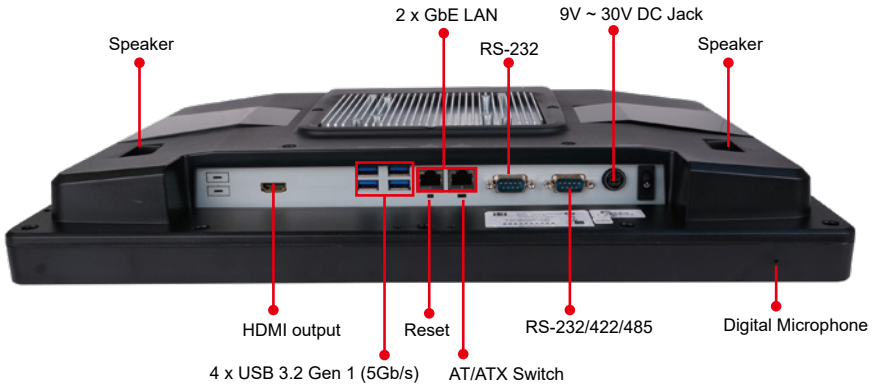

AFL3-W19A-AL
Fully Integrated I/O

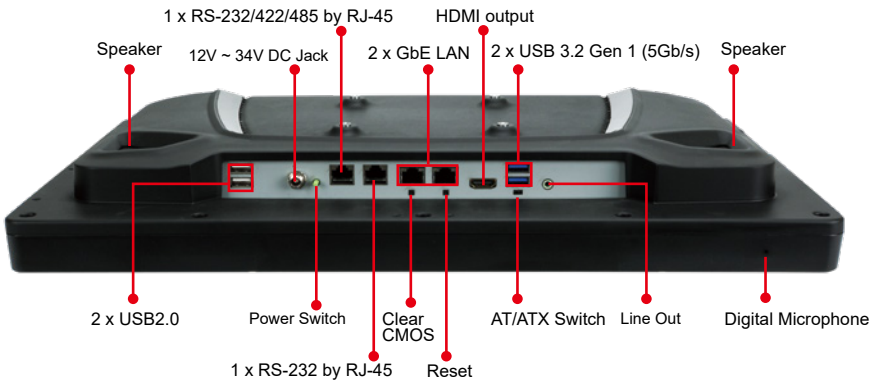

AFL3-W19C-ULT3 Dimensions *(Unit: mm)*

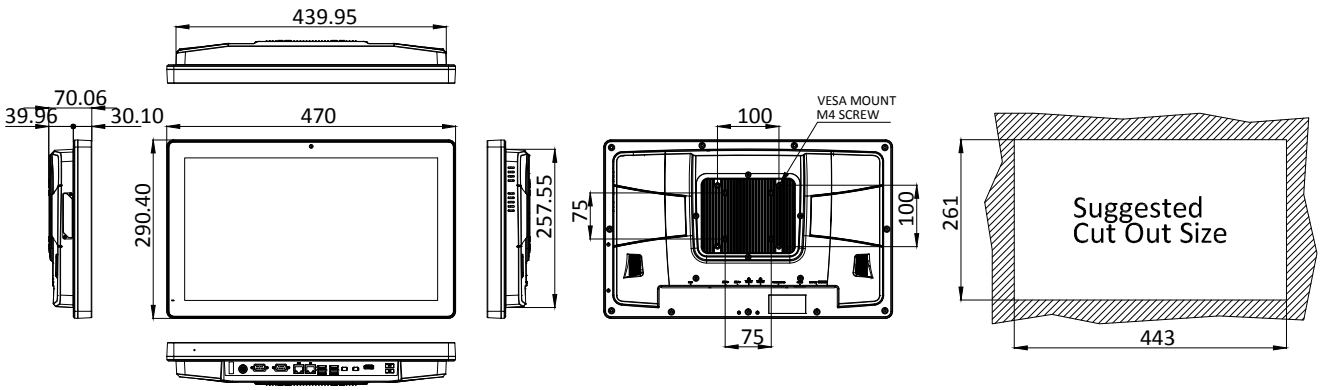

AFL3-W19A-AL Dimensions *(Unit: mm)*

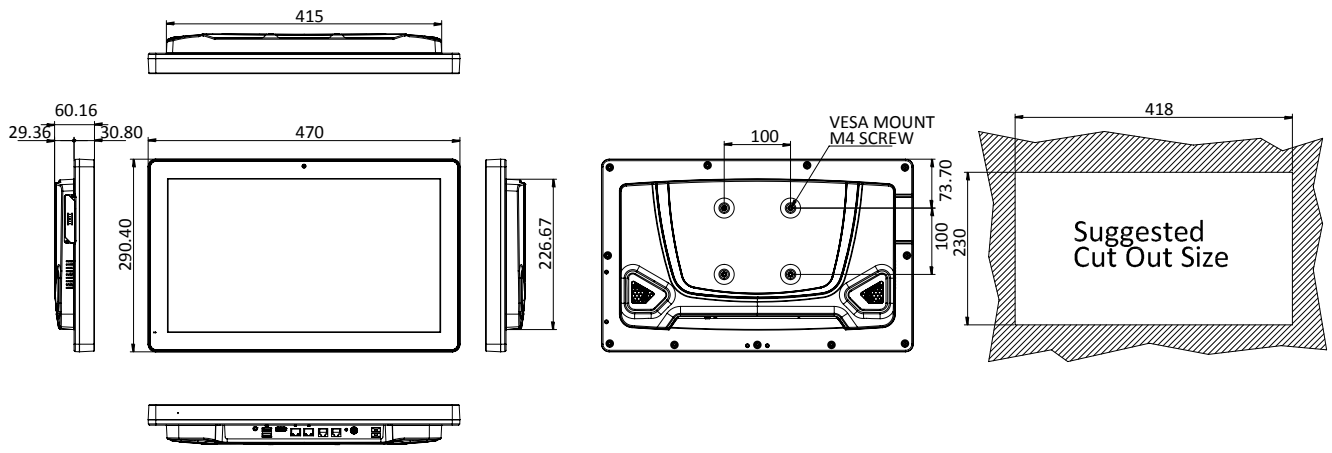

AFL3-W22C-ULT3

Intel® Core™ i5 and Celeron® ULT Processor

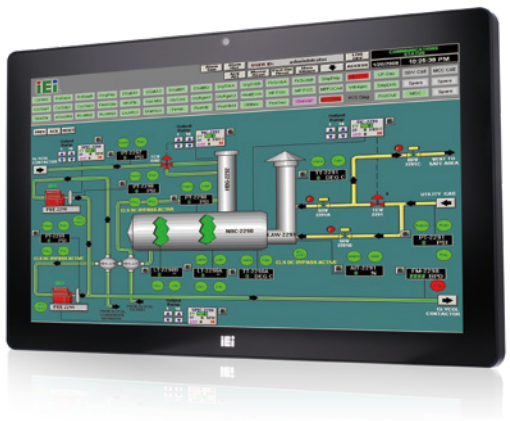

Features

- W21.5 light industrial interactive panel PC
- 9 V ~ 30 V wide range DC power input
- Selectable AT/ATX power mode
- Built-in speakers
- One mSATA slot
- IP64 compliant front panel
- IEI One Key Recovery solution alllows you to create rapid OS backup and recovery (suggested with over 4GB storage capacity)



Specifications

Model		AFL3-W22C-ULT3
LCD	Size	21.5”
	Resolution	1920 x 1080
	Brightness (cd/m²)	250
	Contrast Ratio	1000:1
	LCD Color	16.7M
	Pixel Pitch (mm)	248.25 (H) × 248.25 (V)
	Viewing Angle (H-V)	170º/160º
	Backlight MTBF(hrs)	30,000 (LED backlight panel)
Touch	Touch Screen	Projected capacitive with USB interface (nti-UV / anti-glare coating)
	Touch Controller	EETI EXC3180
Motherboard	CPU	Intel® Core™ i5 and Celeron® ULT Processor
	RAM	Two 260-pin 2133/1867 MHz dual-channel DDR4 SO-DIMMs (system max. 32 GB)
	Ethernet	2 x Intel® I211-AT PCIe GbE controller
	Audio Codec	ALC888S
Storage		1 x mSATA (E-Window) 1 x 2.5” SATA 3Gb/s HDD bay 1 x M.2 M key PCIe (2280 or 22110 PCIe signa)
I/O Ports & Switch		1 x RS-232 by DB-9 (RI/5V/12V) 1 x RS-232/422/485 by DB-9 (RI/5V/12V) 2 x GbE LAN 4 x USB 3.2 Gen 1 (5Gb/s) 1 x HDMI output 1 x Power switch 1 x Reset button 1 x AT/ATX switch 1 x 9-30V lockable power jack
E-Window Expansion		Yes, optional (full-size mini-PCIe slot with PCIe or SATA / USB signal)
Audio		AMP 3W + 3W (internal speaker)
Camera and Microphone		2-megapixel with low light function, digital microphone
Wireless & Bluetooth		IEEE 802.11 a/b/g/n/ac, Bluetooth V4.1 M.2 slot A+E key 2230 slot (PCIe/USB signal)
OSD Function		Software OSD
Physical	Front Panel Construction	PC + ABS Plastic
	Mounting	Panel, Wall, Stand and Arm VESA 75mm x 75mm / 100mm x 100mm
	Color	Black C
	Dimensions (W x H x D) (mm)	528 x 336 x 68
	Cut-out Dimensions (W x H) (mm)	502 x 303
	Net/Gross Weight (kgs)	8.27/11.27
Environment	Operating Temperature (Ambient with air flow)	-20ºC ~ 50ºC
	Storage Temperature	-20ºC ~ 60ºC
	Humidity	10% to 95% (non-condensing)
	IP Level	IP 64 compliant front panel
	Safety & EMC	CE / FCC
	Thermal Solution	Fanless
Power	Power Requirement	9 V ~ 30 VDC
	Power Consumption	12V@6A (Intel® Core™ i5-6300U CPU with 4GB DDR42133 MHz DDR4 memory)

Ordering Information

Part No.	Description
AFL3-W22C-ULT3-C/PC/4G-R14	Wide 22" 250 cd/m² 1920x1080 Panel PC with withIntel® 14nm 6th Generation Mobile Celeron®3955U (15W) on-board Processor (ULT), 1*4GB DDR4 RAM, 802.11a/b/g/n/ac WiFi module, PCAP touch, 2M camera, microphone,with AG, R14
AFL3-W22C-ULT3-i5/PC/4G-R14	Wide 22" 250 cd/m² 1920x1080 Panel PC with Intel® 14nm 6th Generation Mobile Core™ i5-6300U (15W) on-board Processor (ULT), 1*4GB DDR4 RAM, 802.11a/b/g/n/ac WiFi module, PCAP touch, 2M camera, microphone , with AG, R14

Packing List

Item	Part No.	Q'ty	Remark
Round head machine screw	44403-040061-RS	4	M2*4 round head machine screw
Pan head machine screw	44003-030052-RS	4	M4*6 pan head machine screw
Power adapter	63040-010096-100-RS	1	96W; Vin: 90V~264V AC; Vout: 12VDC

Options

Item	AFL3-W22C-ULT3
Panel Mounting Kit	AFL3PK-W19C-R10
Wall Mounting Kit	AFLWK-19B
Arm	ARM-11-RS/ARM-31-RS
Stand	STAND-A21-R10/ STAND-210-R11/STAND-A19-RS/STAND-C19-R10
Magnetic Card Reader	AFL3P-W10MSR-U-R10
Barcode Scanner	AFL3-2D-R11
RFID Reader (13.56 MHz Mifare Type) (For ATO assembly)	AFL3-MF-RFID-KIT02-R10
*OS: Win 7 Embedded (64-bit)	AFL3-W15C-ULT3-WES7P64-R10
*OS: Win 10 IOT Enterprise (64-bit)	AFL3-W15C-ULT3-W10E64-V-R10

*OS image with CD-ROM without storage

E-Window (for ATO assembly)

Part No.	Description
E-MPCIE-LAN02-R10	PCIe Mini card supports 1-port GbE with Realtek RTL8111HN-CG controller, with PMS 194C I/O bracket and 340 mm cable, R10
E-MPCIE-3G-R10	PCIe Mini card supports 3G WWAN , with PMS 130C I/O bracket, RF antenna 300mm cable and GSM antenna cable, R10

E-MPCIE-LAN-R10

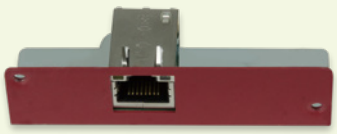

E-MPCIE-3G-R10





AFL3-W22C-ULT3
Fully Integrated I/O

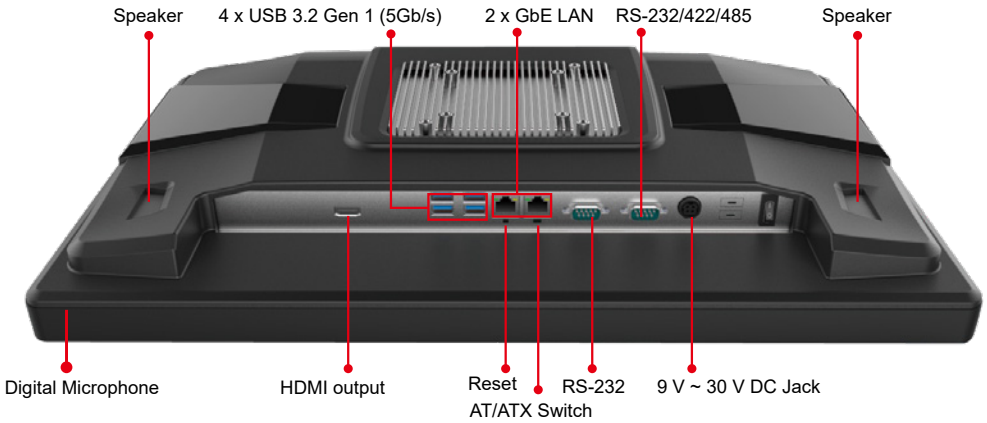

AFL3PK-W19C-R10
Panel Mounting Kit Dimensions (Unit: mm)

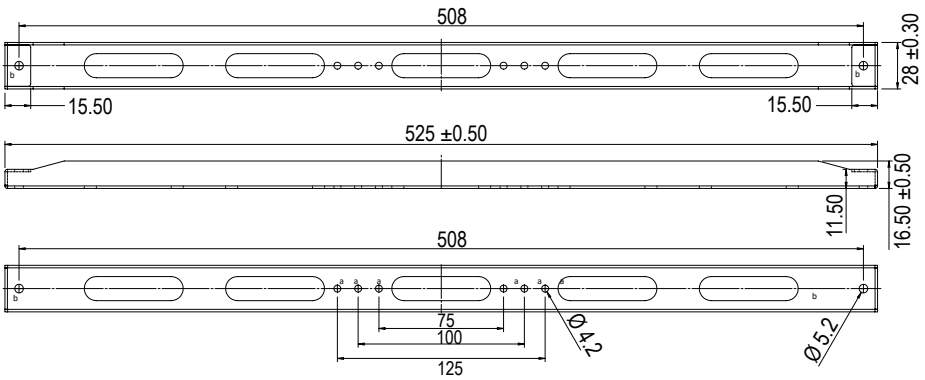

AFL3-W22C-ULT3 Dimensions (Unit: mm)

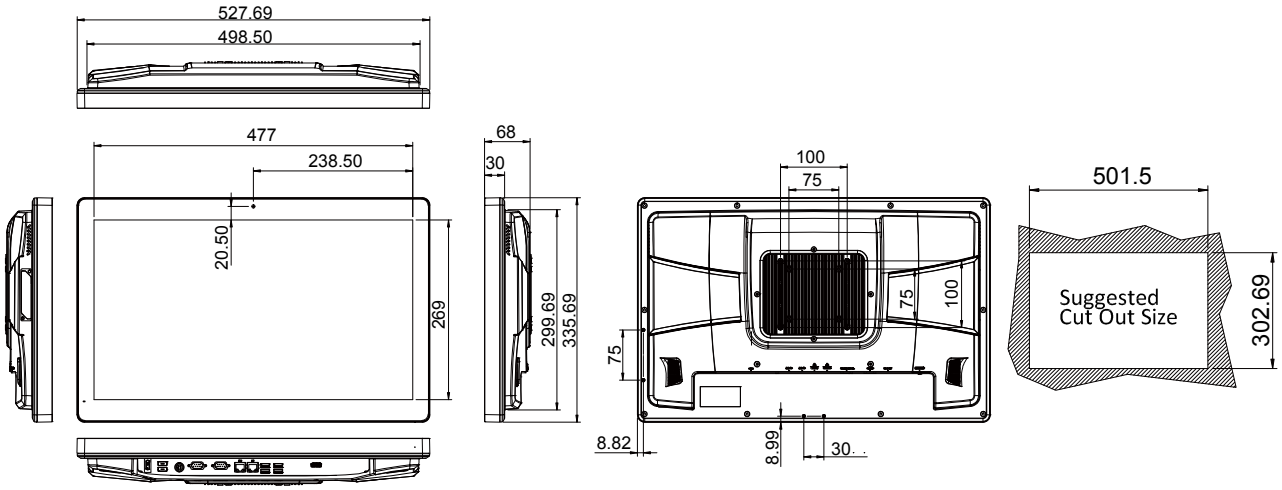

AFOLUX GEN II Panel PC

New Flat Bezel, Multi-touch, Wide Voltage AFOLUX Panel PC

From the heritage of affordable Luxury AFOLUX Panel PC, AFOLUX II Panel PC shows it's spirit to exceed the history. The AFOLUX II Panel PC is slim and stylish and provides two types of touch option. RFID reader, wide voltage power input are its features which make it more flexible and more powerful than ever!

Innovative product design:

- AFOLUX II flat bezel design is thinner than AFOLUX
- Projected capacitive multi-touch and resistive single touch screen options

New technology and multiple functions:

- LED dash system for eye-catching notification
- Integrated EM/ Mifare RFID reader
- Light fanless temperature management
- 9 V ~36V DC wide voltage input fits all power requirements
- IEI Light Fanless technology allows the system to turn on/ off fan automatically, enhancing system stability.
- Exclusive LED Light Bar Simulation displays light signals



Rugged while Stylish

Flat Bezel Design with IP64 Protection

AFOLUX II series is designed in flat bezel panel and against dust and water, enduring flawless operation.

Flat-bezel Features:

- Better visual effects
- Sleek and stylish
- No edge effect
- Easy to clean



Enhanced Touch Technology – Projected Capacitive Touch

Projected capacitive touch panel is stronger and with higher transparency than the resistive type touch panel. It also supports Windows 7 multi-touch function compatible with glove-wearing users and enhancing ease-of-use.

Model	AFL2-17A-H61/PC	AFL2-17A-H61/R
Type of Touch	Projected capacitive type	5-wire resistive type touch
Touch Function	Multi-touch	Single-touch
Transparency	85%	78%
Hardness	≥6H	≥3H
Input Flexibility	Hand/ glove	Hand/ glove/ stylus

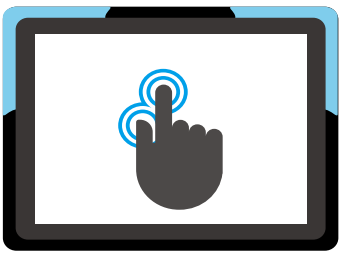

6H Anti-scratch Surface (Projected Capacitive Type Touchscreen)

Projected capacitive touch technology utilizes a durable glass front surface. 6H hardness is stronger than the conventional touch panel and therefore is able to protect the screen from damage.

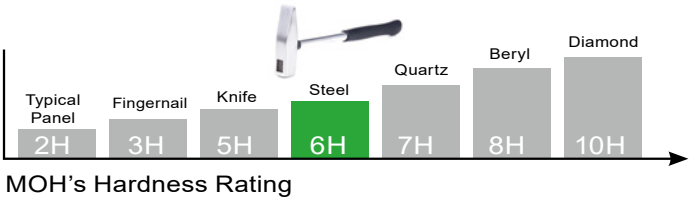

MOH's Hardness Rating

Superior Performance

The Best C/P Value Intel® H61 Platform

Comparing to mobile solution, Intel® H61 with desktop CPU provides low power consumption but high performance.

Mobile 2nd Core i3 V.S. Desktop Pentium & 2nd Core i3

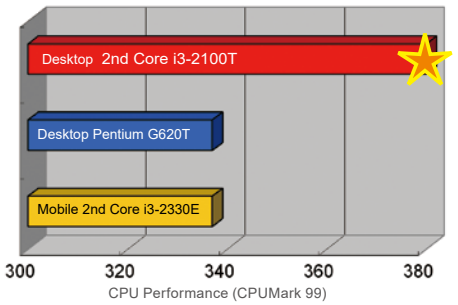

CPU Type	Intel® 2nd Core™ i3-2330E (Mobile 35W CPU)	Intel® Pentium® G620T (Desktop 35W CPU)	Intel® 2nd Core™ i3-2100T (Desktop 35W CPU)
CPU Performance (CPUMark 99)	337	337	380

Mobile Celeron V.S. Desktop Celeron

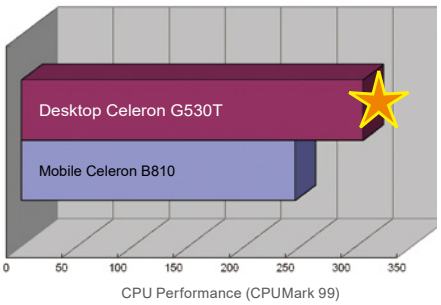

CPU Type	Intel® Celeron® B810 (Mobile 35W CPU)	Intel® Celeron® G530T (Desktop 35W CPU)
CPU Performance (CPUMark 99)	245	306

Better Performance with Intel® Atom™ Cedarview Dual Core Processor

AFOLUX II Cedarview panel PC integrates with Intel dual core processor running with DDR3 memory. With fanless system, it reduces system noise and dust accumulation.

N2600 CPU performance is 31% better than N270,
Graphics performance is 36% better than N270,
Memory performance is 21% better than N270

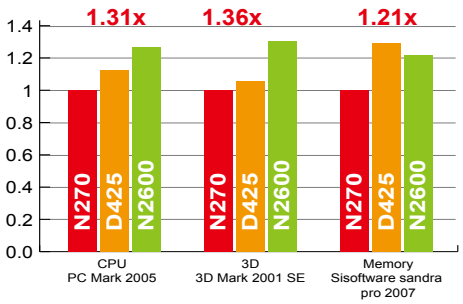

Secondary Display on Full HD

Latest Display Technology: HDMI

HDMI is a compact audio/video interface for transferring uncompressed digital video data and compressed/ uncompressed digital audio data from an HDMI-compliant device to a compatible digital audio device, computer monitor, video projector, or digital television. HDMI is a digital replacement for existing analog video standards.

	Maximum clock rate(MHz)	Maximum total TMDS throughput (Gbit/s)	Maximum color depth (bit/px.)	Maximum resolution over single link at 24-bit/px	Dolby TrueHD bitstream capable	3D over HDMI
Version 1.0 to 1.2	165	4.95	24	1920 x 1200	No	No
Version 1.3	340	10.2	48	2560 x 1600	Yes	No
Version 1.4	340	10.2	48	2096 x 2160	Yes	Yes



Advantages

- Backward compatible with DVI via an adapter.
- Support audio transport (v.s. DVI canonly transmit image).



Latest Display Technology: DisplayPort

It's not only used to connect a video source to a display device, but also be used to transmit audio, USB, and other forms of data. DisplayPort lets you take advantage of today's high-bandwidth content, enabling you to create a professional and powerfully compelling digital signage solution.



Advantages

- Backward compatible with DVI/HDMI with the adapter.
- Support multi-display: It can works with monitors, notebooks or all-in-one computers.



Flexible Design to Fit Various Scenarios

Wide Application to Extreme Circumstance

Power supply requirement varies from applications. Incorrect voltage input will damage electronic components thus cause system break down. AFOLUX GEN II offers wide voltage power input, which fits different application scenarios and increase stability of the system.



Wide range 9~36VDC input *

Wide range DC input fits different power source depends on what circumstance needed.

Wide Range Power Input	9~ 36V DC*

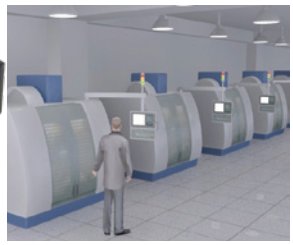

Automation Central Control



Factory Manufacture Control



Truck Control (24V)

Easy to Use

LED Indicator and Function Key

- Function key can be more convenient for panel PC users to operate this panel without any keyboard or mouse.
- Indicator is located in front of panel, it can tell users which function is enable or disable

• LED Indicators

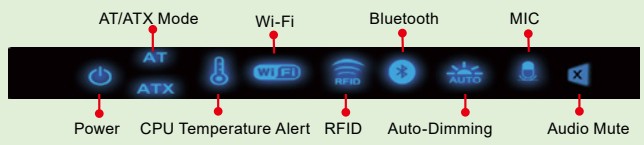

- Brightness of LED indicator can be set by manual (3-step) or auto-adjust by ambient light (new function support from AFL2-xxA-N26 R11, AFL2-xxA-N28-R11, AFL2-xxA-H61 R12, AFL2-W21A-H61 R10)

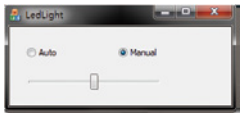

• Function Key

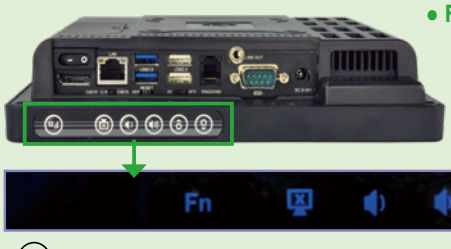

- Fn + Fn
- Backlight On/Off
- Audio -
- Audio +
- Brightness -
- Brightness +
- Fn + RFID Enable/Disable
- Fn + Audio Mute
- Fn + Camera Enable/Disable
- Fn + Front Side USB Enable/Disable
- Fn + Power On / Off

Mini USB 2.0 Port & microSD Card Slot on Front Panel





Mini USB 2.0

The AFOLUX GEN II new series has a mini USB 2.0 port on the front panel for easy connecting.

MicroSD card

The AFOLUX GEN II new series has a microSD slot on the front panel for easier access.

Auto-dimming Advantages



Auto-dimming Advantages

- Power Consumption Saving
- Comfortable Viewing Brightness
- Extend Product Lifetime

Auto-dimming

Automatically adjust the optimal brightness to fit the environment.



Day: Higher Ambient Luminance



Night: Lower Ambient Luminance

IEI Light Fanless System

IEI Light Fanless System is a highly effective smart system, embedded with a smart sensor to sense the ambient temperature. It can operate quietly with high performance in various applications, such as a patient's bedside multimedia platform, gaming machines, airport kiosks etc.



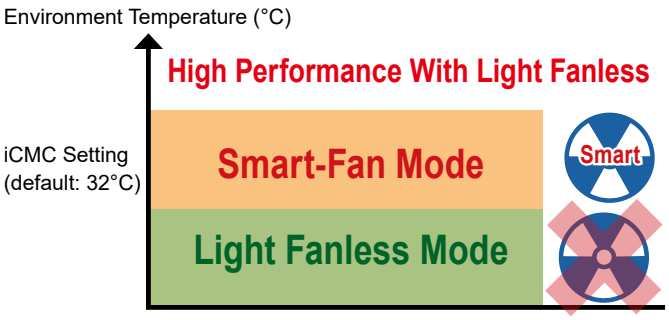

Benefits

- Power Saving: Auto switch on/off fan can reduce redundant power consumption
- Expanding system lifecycle: Helping users to run system more effectively, it also enhances the lifecycle of CPU.
- Effectively manage system environment: User can monitor the information of the system easily
- High performance with noiseless: IEI supports noiseless situation to have quiet environment and high performance simultaneously.

IEI Light Fanless Applications



Patient Bedside Entertainment System



Clean Room



Semi-outdoor Kiosk

iCMC (IEI Cooling Management Console)

iCMC, IEI's exclusive software, provides reliable embedded features for system integrators. It simplifies integration for the AFOLUX II and upgrades system configuration from the BIOS level to the operating system level.

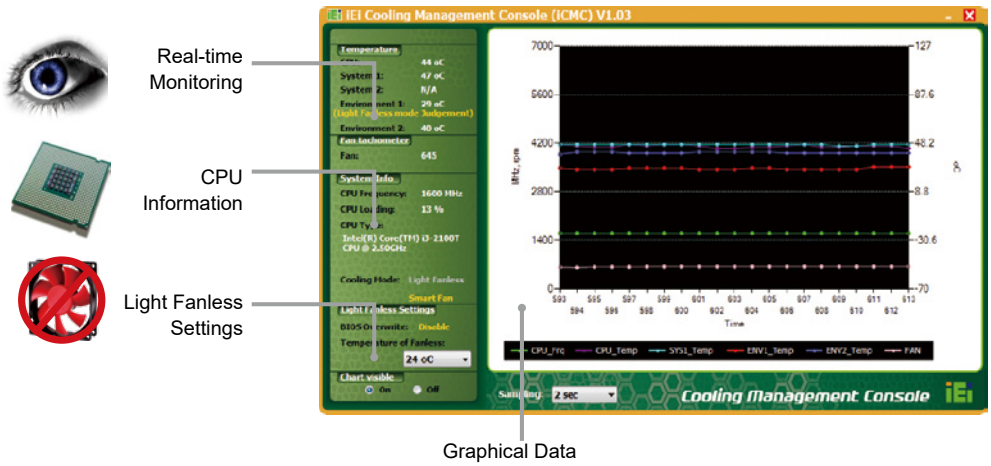

LED Light Visual Management



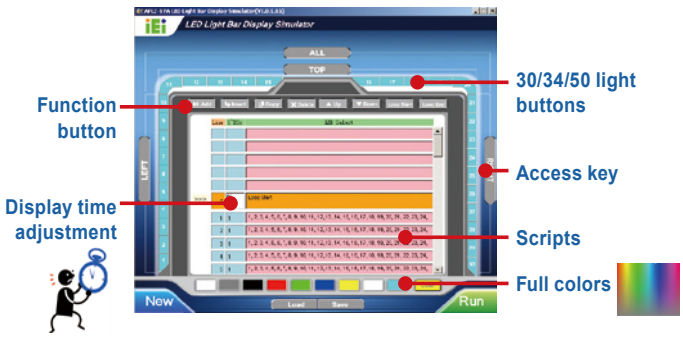

Support LED Light Bar control API for the customer to suit their own software program. Light bar signal are correspond to the light button. User can customize their own light patterns for different conditions.

Features

- Programmable LED RGB colors
- Signaling light display user demand
- Manual scripts for LED lighting programs
- 100% software programmable colors, light duration, and light patterns
- 30 light sections for AFL2-17A-H61, 34 light sections for AFL2-W19A-H61
  50 light sections for AFL2-W21A-H61, each light section can be configured independently.

LED Dash Board for Visual Visual Alert System and Status Notification


Achieving a smooth production line


Medical care alert system



Showing appealing light simulation

AFL2-12A-HM65

Intel® Core™ i7/i5/i3 Processor



Features

- 12.1” 600nits 1024 x 768 flat-bezel LCD with LED backlight
- Supports projected capacitive touchscreen or 5-wire resistive type touchscreen
- Built-in two 3W speakers and microphone
- GbE LAN for high speed network applications
- One 204-pin DDR3 SO-DIMM slot (system max. 4GB)
- Wi-Fi 802.11b/g/n high speed wireless
- EM or Mifare RFID reader
- IP 64 compliant front panel
- Auto-dimming control
- Built-in 2 megapixels webcam with AF AE and AWB capabilities
- Wide range 9~36 VDC input



Specifications

Model		AFL2-12A-HM65
LCD Specifications	Size	12.1"
	Resolution	1024 (W) x 768 (H)
	Brightness (cd/m²)	600
	Contrast Ratio	700:1
	LCD Color	16.2 M
	Pixel Pitch (mm)	0.240 (H) x 0.240 (V)
	Viewing Angle (H-V)	160° / 140°
	Backlight MTBF	50000 hrs (LED backlight)
Touch	Touch Screen	5-wire rsistive type with RS-232 interface / projected capacitive type with USB interface
	Touch Controller	PenMount DMC9000 / EETI EXC7200 & EXC5400
System	CPU	2nd Generation Intel® Core™ i7/ i5/ i3 and Celeron® processor
	Chipset	Intel® HM65
	RAM	Support one 204-pin DDR3 SO-DIMM slot (Max. 4GB)
	Ethernet	Realtek RTL8111HN-CG PCIe GbE controller supporting ASF 2.0
	Storage	2.5" SATA 6Gb/s SSD bay
	Input / Output	1 x RS-232 (DB-9) 1 x RS-232 (RJ-45) 1 x RS-422/485 (4-pin box header) 2 x GbE LAN (RJ-45) 2 x USB 2.0 2 x USB 3.2 Gen 1 (5Gb/s) 1 x Mini USB 2.0 port on front panel 1 x Audio jack (line-out) 1 x HDMI port 1 x MicroSD card slot on front panel 1 x Power switch 1 x AT/ATX switch 1 x Reset button 1 x Clear CMOS button 1 x DC input jack
Other Features	Audio	AMP 3W + 3W (internal speaker)
	Camera	2 M pixels with low light function
	RFID Reader	EM 125 KHz or Mifare 13.56 MHz card reader (optional)
	MSR Card Reader	MSR card reader (optional)
	OSD Function	LCD on/off, brightness up/down, volume up/down, Hot Key
	Ambient Light Sensor	Yes
	Infrared Remote Controller	Yes
	System Cooling	Smart fan
Connectivity	Wireless	IEEE 802.11b/g/n module Telec certified
Physical	Construction Front Panel	PC + ABS Plastic
	Mounting	Panel, Wall, Rack, Stand and Arm VESA 100 mm x 100 mm
	Color	Black
	Dimensions (WxHxD)(mm)	310 x 265 x 52.6
	Weight (N/G)	3.8 kg / 6.1 kg
Environment	Operating Temperature (°C) (Ambient with air flow)	-20°C ~ 50°C with SSD
	Storage Temperature (°C)	-20°C ~ 60°C
	Humidity	10% to 95% (non-condensing)
	IP Level	IP 64 compliant front panel
	Safety&EMC	CE / FCC
Power	Power Supply	90W power adapter Input: 100VAC~240VAC, 50/60Hz Output: 19VDC
	Power Requirement	9 ~ 36 VDC
	Power Consumption	19V@2.68A (Intel® Core™ i5-2510E processor with 4GB DDR3 memory)

Ordering Information

Part No.		Description
Resistive Touch Screen	AFL2-12A-HM65/R-R15	12.1" 600cd/m² XGA panel PC, 802.11b/g/n wireless module, resistive touch screen, 2M camera, microphone, dual GbE LAN, R15
Projective Capacitive Touch Screen	AFL2-12A-HM65/PC-R15	12.1" 600cd/m² XGA panel PC, 802.11b/g/n wireless module, projected capacitive touchscreen, 2M camera, microphone, dual GbE LAN, R15
CPU Selection	CPU-MB-i7-2640M	2nd Generation Intel® Core™ i7 Processor [Mobile], PPGA-988, dual core 2.8GHz, 35W, iAMT
	CPU-MB-i5-2510E	2nd Generation Intel® Core™ i5 Processor [Mobile], PPGA-988, dual core 2.5GHz, 35W, iAMT
	CPU-MB-i3-2310M	2nd Generation Intel® Core™ i3 Processor [Mobile], PPGA-988, dual core 2.1GHz, 35W
	CPU-MB-CM-B810	Intel® Celeron® Mobile Processor, PPGA-988, dual core 1.6GHz, 35 W
	CPU-MB-CM-B710	Intel® Celeron® Mobile Processor, PPGA-988, single core 1.6GHz, 35 W
Memory Selection	DDR3-SO-1333-1GB	SO-DIMM DDR3 1333MHz 1GB
	DDR3-SO-1333-2GB	SO-DIMM DDR3 1333MHz 2GB
	DDR3-SO-1333-4GB	SO-DIMM DDR3 1333MHz 4GB

Options

Item	AFL2-12A-HM65
Panel Mounting Kit	AFLPK-15
Wall Mounting Kit	AFLWK-19B
Rack Mounting Kit	AFL2RK-12
Arm	ARM-11-RS
Stand	STAND-A12-RS/STAND-A19-RS/STAND-A21-R10/ STAND-C12-R10
V-Stand	VSTAND-A12-R11
Magnetic Stripe Reader Kit	AFL2P-12AMSR-U-R10
EM RFID Reader	AFL2-EM-RFID-KIT01-R10
Mifare RFID Reader	AFL2-MF-RFID-KIT01-R11
OS: Win XPE (2GB CF Card)	AFL2-12A-HM65-XPE-R15*
OS: Win XPE (4GB CF Card)	AFL2-12A-HM65-XPE-R15*
OS: Win 7 Embedded (4GB CF Card)	AFL2-12A-HM65-WES7P-R14* (for Projected Capacitive Touch) AFL2-12A-HM65-WES7E-R14* (for Resistive Touch)

*OS image with CD-ROM or DVD-ROM

Packing List

Item	P/N	Q'ty	Remark
Utility CD		1	Drivers and user manual
One Key Recovery CD		1	
Power Adapter	63040-010090-120-RS	1	90W ;19VDC output
Power Cord	32702-000401-100-RS	1	1500 mm, European Standard
Power Transfer Cord	32702-000300-100-RS	1	
M3 Screw Pack	44013-030041-RS	4	M3*4 for securing HDD
M4 Screw Pack	44403-040061-RS	4	M4*4 VESA screw
RJ-45 to DB-9 COM Port Cable	32005-000200-200-RS	1	
IR Remote Controller	7Z000-SLPCB005-RS	1	
RS-422 Cable	32205-002400-100-RS	1	
Pen	43125-0002C0-00-RS	1	For Resistive Touch

AFL2-12A-HM65 Fully Integrated I/O

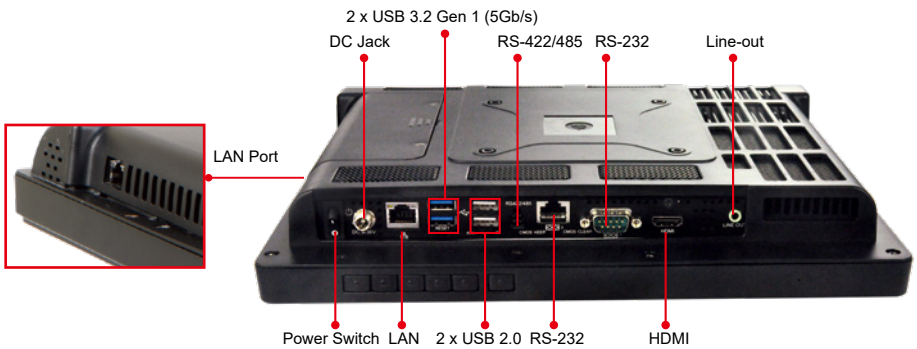

AFL2-12A-HM65 Dimensions

(Unit: mm)

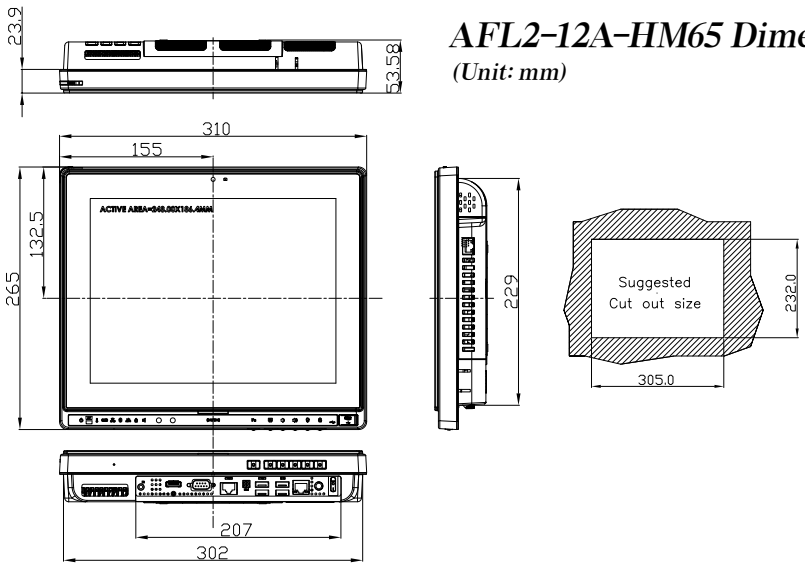

E-Window Tool Kit

Innovative E-windows technology is a new modular way of adding flexible functionality to a wide range of device. Using standardized component helps system integrators easily add more features without any costly efforts.



Features

- Easy maintenance
- Variety module & I/O plate with flexible customization
- Integration of multiple functions
- Easy for replacement with different modules

Ordering Information: (shipment by assembly to order)

E-Window

Item	Description	Support list	
E-MPCIE-LAN-R10	PCIe mini card supports 1-port GbE with REALTEK RTL8111HN-CG controller, with PMS 194C I/O bracket and 250mm cable, R10	AFL3-12A-BT * AFL3-W15A-BT * AFL3-W19A-AL	AFL3-W15C-UTL3 AFL3-W19C-UTL3 AFL3-W22C-ULT3
E-MPCIE-DLAN-R10	PCIe mini card supports PCIe mini card supports 2-port GbE with Intel I211 controller, with PMS 194C I/O bracket and 250mm cable, R10	AFL3-12A-BT * AFL3-W15A-BT * AFL3-W19A-AL	AFL3-W15C-UTL3 AFL3-W19C-UTL3 AFL3-W22C-ULT3
E-MPCIE-3G-R10	PCIe mini card supports 3G WWAN Module , with PMS 130C I/O bracket, RF antenna 300mm cable and GSM antenna cable, R10	AFL3-12A-BT AFL3-12C-BT AFL3-W15A-BT AFL3-W19A-AL	AFL3-W15C-UTL3 AFL3-W19C-UTL3 AFL3-W22C-ULT3
E-MPCIE-CAN-R10	USB to dual isolated CANbus 2.0B Module	AFL3-W15C-ULT3 AFL3-W19A-AL	AFL3-W19C-ULT3 AFl3-W22C-ULT3

* Remove AFL3-USBHUB-R10

E-MPCIE-LAN-R10

PCI Express Mini GbE LAN Module, Full Size, RoHS

NEW

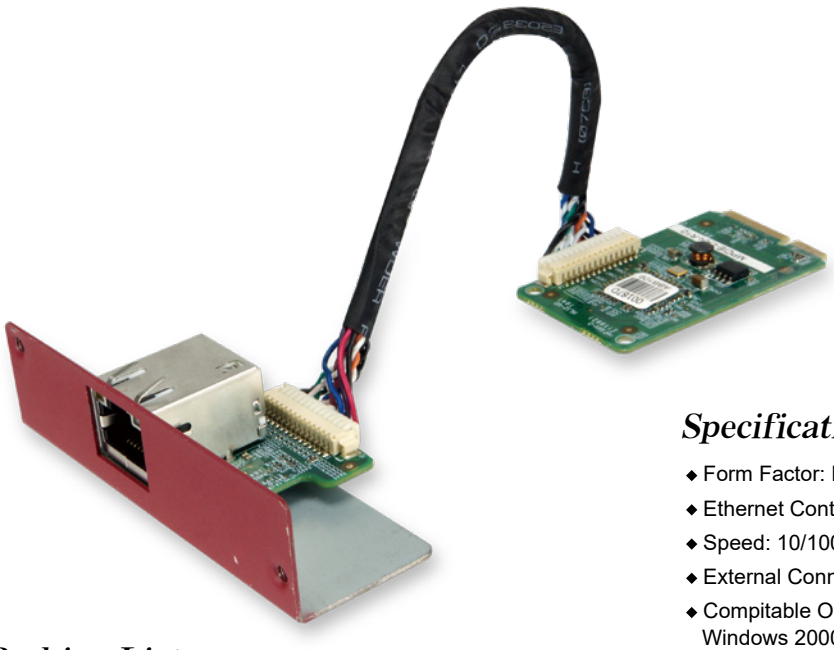

Features

- Support one GbE LAN by RTL8111HN-CG
- Compliant with PCI Express Mini specification 1.2

Specifications

- Form Factor: PCI Express Mini card
- Ethernet Controller: Realtek RTL8111HN-CG
- Speed: 10/100/1000Mbps
- External Connector: 1 x 8-pin RJ-45
- Compitable OS
  Windows 2000/ XP/ Server 2003/ Server 2008/ Vista/ 7
  Linux kernel version 2.6.32 or above
- Power Supply: On board 3.3V
- Operating Temperature: -10°C ~ 70°C
- Operating Humidity: 5% ~ 95%, non-condensing
- Dimensions (LxW): 51 mm x 30 mm
- Weight: 70g
- CE/FCC compliant

Packing List

1 x MPCIE-LAN module
1 x Flat cable (pitch=1.25mm)
1 x QIG

Ordering Information

Part No.	Description
E-MPCIE-LAN-R10	PCIe Mini card supports 1-port GbE with Realtek RTL8111HN-CG controller, with PMS 194C I/O bracket and 250mm cable, R10
E-MPCIE-LAN02-R10	PCIe Mini card supports 1-port GbE with Realtek RTL8111HN-CG controller, with PMS 194C I/O bracket and 340 mm cable, R10
E-MPCIE-LAN03-R10	PCIe Mini card supports 1-port GbE with Realtek RTL8111HN-CG controller, with PMS 194C I/O bracket and 150 mm cable

Dimensions (mm)

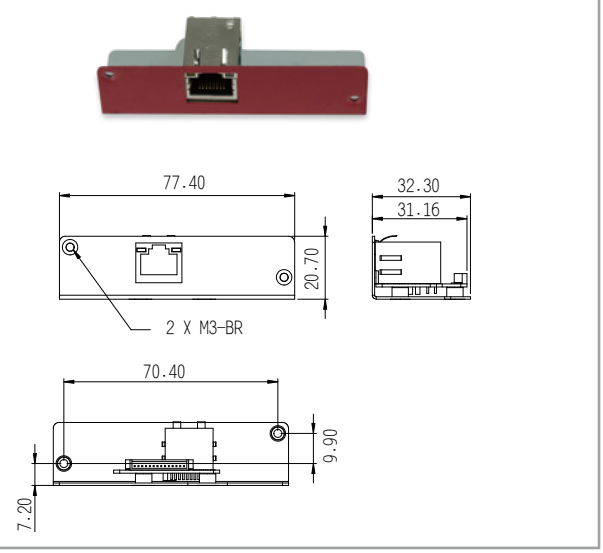

Dimensions (mm)

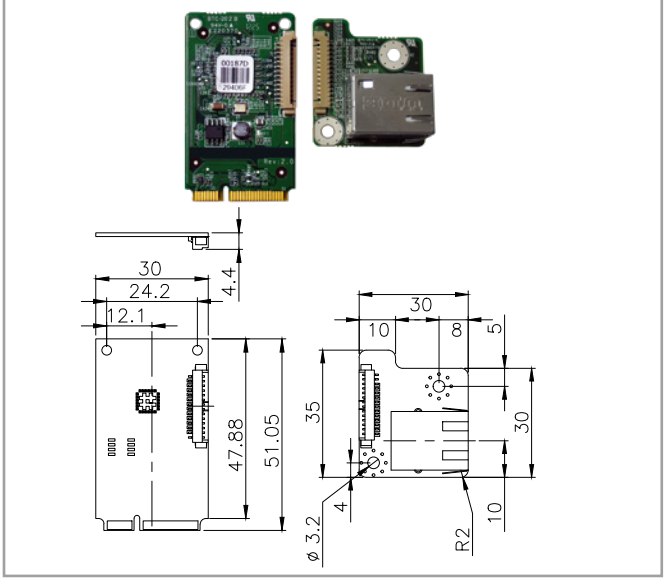

E-MPCIE-DLAN-R10

PCI Express Mini Dual Intel® GbE LAN Module, Full Size, RoHS

NEW

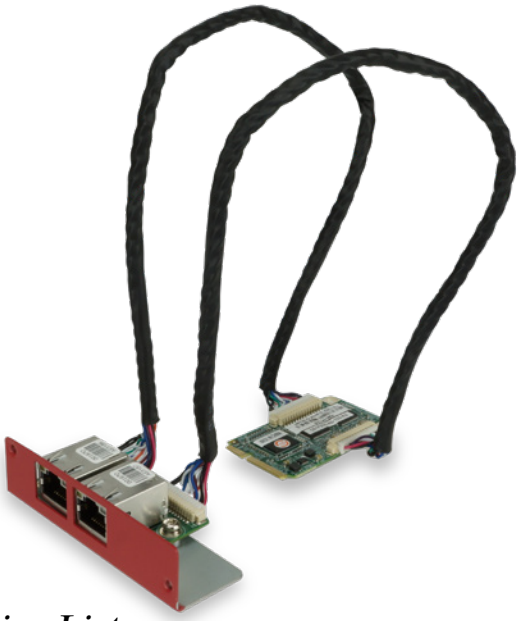

Features

- Support dual GbE LAN by Intel® I210-IT
- Compliant with PCI Express Mini specification 1.2

Specifications

- Form Factor: PCI Express Mini card
- BIOS: UEFI BIOS
- Ethernet Controller: Dual Intel® I210-IT
- Speed: 10/100/1000Mbps
- External Connector: 2 x 8-pin RJ-45
- Power Supply: On board 3.3V
- Compitable OS
  Windows XP/Server 2003/ Server 2008/ Vista/ 7 /8.1/10
  Linux kernel version 2.6.32 or above
- Operating Temperature: -10°C ~ 70°C
- Operating Humidity: 5% ~ 95%, non-condensing
- Dimensions (LxW) : 51 mm x 30 mm
- Weight: 55g
- CE/FCC compliant

Packing List

1 x MPCIE-DLAN module
2 x Flat cable (pitch=1.25mm)
1 x QIG

Ordering Information

Part No.	Description
E-MPCIE-DLAN-R10	PCIe Mini card supports 2-port GbE with Intel® I211 controller, with PMS 194C I/O bracket and 250mm cable, R10
E-MPCIE-DLAN02-R10	PCIe Mini card supports 2-port GbE with Intel® I211 controller, with PMS 194C I/O bracket and 150mm cable

Dimensions (mm)



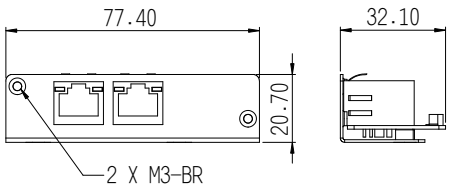

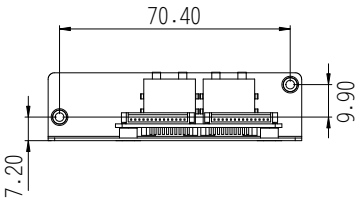

Dimensions (mm)

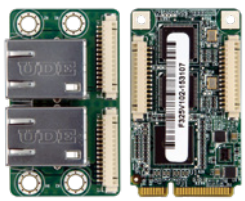

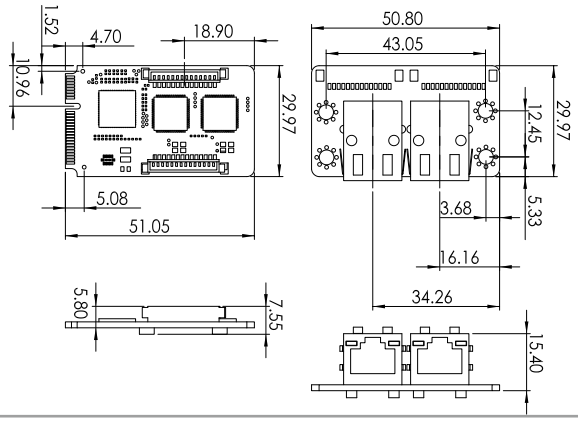

E-MPCIE-3G-R10

PCI Express Mini 3G Adapter Card, RoHS

NEW

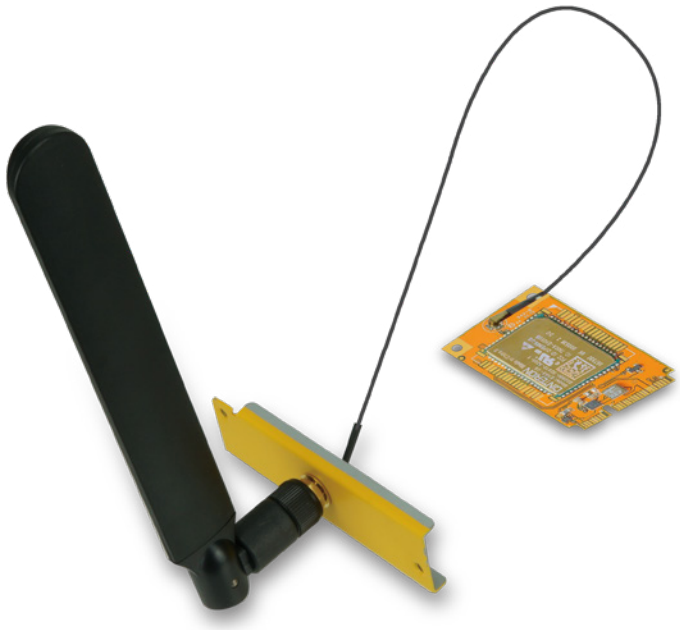

Features

- Real time clock: Timer functions via AT commands
- Phonebook: SIM and phone
- TTY/CTM support: Integrated CTM modem

Specifications

- Form Factor
  PCI Express Mini card
  Antenna 50Ohms. Main GSM/UMTS antenna
- Frequency Bands
  GSM/GPRS/EDGE: 850/900/1800/1900 GPRS/EDGE Class12
  UMTS/HSPA+: Dual band UMTS 800/850/900/1900/2100 MHz
- USB
  USB 2.0 High Speed (480Mbit/s) device interface
- Compatible OS
  Windows® 8, Windows® 7, Windows EC, Linux, Android
- Operating Temperature
  Normal operation: -30°C to +85°C
  Restricted operation: -40°C to +95°C
- Dimensions (W x D x H)
  51.0 mm × 30.0 mm × 4.75 mm

Packing List

1 x PCI Express Mini 3G adapter card

Ordering Information

Part No.	Description
E-MPCIE-3G-R10	PCIe Mini card supports 3G WWAN module, with PMS 130C I/O bracket, 300mm RF antenna cable, and GSM antenna cable, R10
32501-000705-100-RS	Internal antenna cable, 213mm
32503-000100-100-RS	External GSM antenna cable, 300mm

Dimensions (mm)

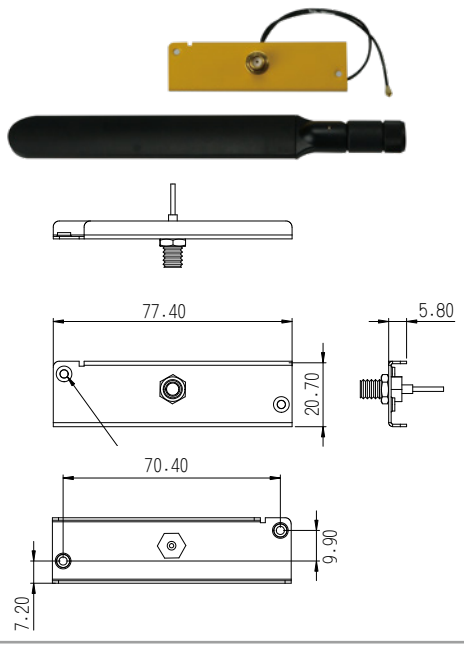

Dimensions (mm)

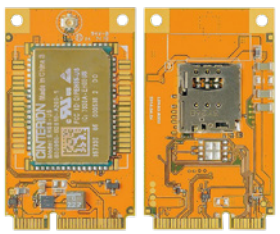

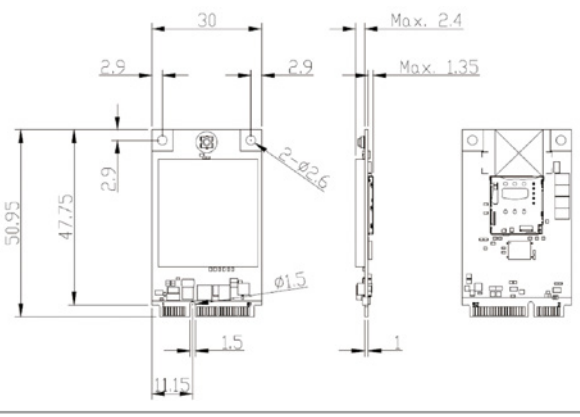

E-MPCIE-CAN-R10

USB to Dual Isolated CAN Bus 2.0B Module

NEW

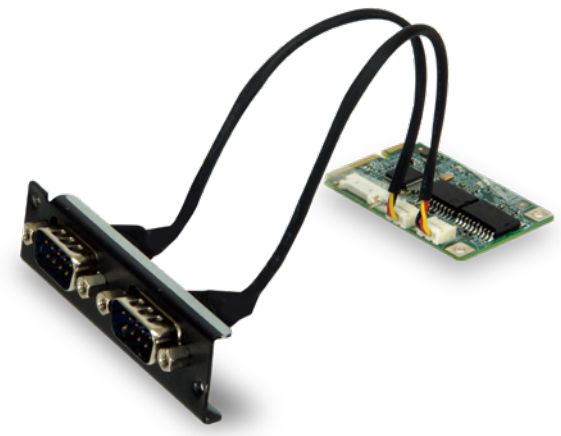

Specifications

- Form-factor: full-size PCIe Mini
- Input I/F: PCIe Mini interface (USB interface)
- Communication Baud Rate: 50/125/250/500/1000K @ 40meter
- Host Site Connector: Internal USB port (PCIe Mini via USB)
- Output I/F: 2 x CAN Bus 2.0B port with optional isolation
- CANBus Connector: 1.25 mm, 2 x 3-pins(GND, CAN_H ,CAN_L) male type wafer box
- Support Voltage and Current : 5.0 V
- Output Connector : two 3-pin (GND, CAN_H ,CAN_L) male type wafer connectors (p=1.25 mm)
- LED Status: D1 Green, Power on/off LED
  D2 Red, CAN-1 Tx LED
  D3 Red, CAN-2 Tx LED
- Operating Temperature: -40 to +85 °C
  Storage Temperature: -40 to +85 °C"
- OS Support: Windows /Linux
- Dimensions (L x W x H): 30 x 50.9 x 6 mm
- EMI:
  −Complies with EN61000-4-5 2.5kV surge protection
  −Complies with IEC 60950-1:2005 + A1: 2009 + A2:2013 2.5kV HiPOT protection
  −Complies with EN61000-4-2 (ESD) Air-15kV, Contact-8kV

Packing List

1 x MPCIE-CAN module
2 x DP9 cable, 30 cm
1 x QIG

Ordering Information

Part No.	Description
E-MPCIE-CAN-R10	PCI Express Mini Dual CAN Bus module, Full size, RoHs

Dimensions (mm)



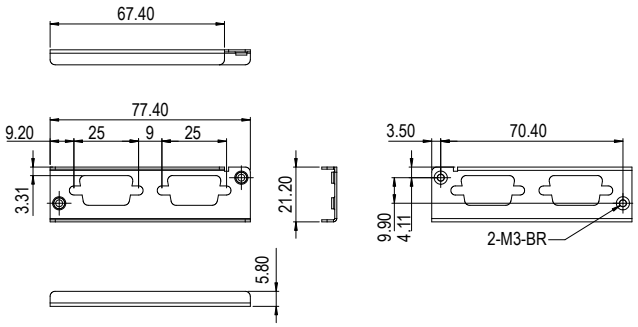

Dimensions (mm)

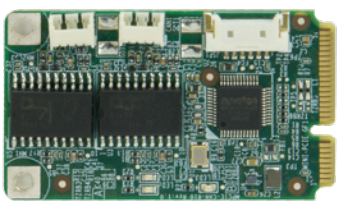

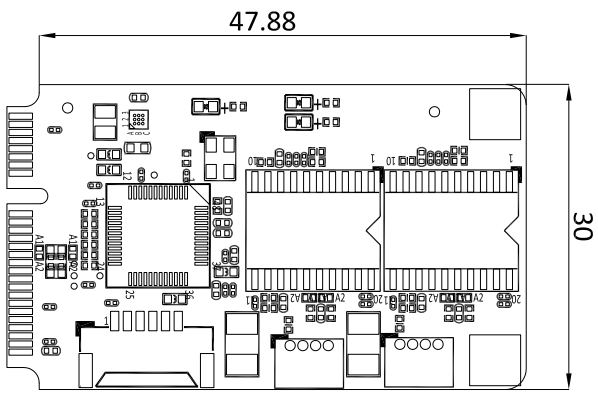

Heavy Industrial Panel PC Solution



The Next Era IoT Panel PC Solution

IEI offers complete robust panel solutions for harsh industrial environments. The product portfolio varies from sizes and performance. To catch the wave of cloud computing and intelligent solutions, IEI introduces the iRIS remote management solution to enhance efficiency for system integration. With all these benefits, IEI is your solid solution for industrial computing.

Heavy Industrial Panel PC Product Line

General Purpose Panel PC

Size	Intel® Bay Trail	Intel® H81	Intel® Q370	Intel® ULT5
5.7"	PPC-F06B-BT			
8"	PPC-F08B-BT			
10.4"	PPC-F10B-BT			
12.1"	PPC-F12B-BT			
15"	PPC-F15B-BT	PPC-F15A-H81	PPC-F15C-Q370	PPC-F15D-ULT5
15.6"			PPC-FW15C-Q370	PPC-FW15D-ULT5
17"	PPC-F17B-BT	PPC-F17A-H81	PPC-F17C-Q370	PPC-F17D-ULT5
18.5"			PPC-FW19C-Q370	PPC-FW19D-ULT5
19"	PPC-F19B-BT			

Verticak Market Panel PC

Solutions	Marine Series			UPC Series
Size	Intel® QM87 (PPC)	Monitor	Embedded Box	Intel® Skylake ULT
12”			SBOX-100-QM87	UPC-F12A-ULT3
15”				
19”	S19A-QM87	S19M-AD		
24”	S24A-QM87	S24M-AD		

PPC-F-ULT5 Series

8th GEN. Intel® Core™ Mobile Processor

Powered by 8th Generation Intel® Whiskey Lake U-Series Processors, PPC-FxxD-ULT5 Series Panel PC not only delivers improved graphics performance but also supports passive cooling design without fans. In addition, it is equipped with HDMI port, allowing users to easily clone or extend screen to a second monitor.

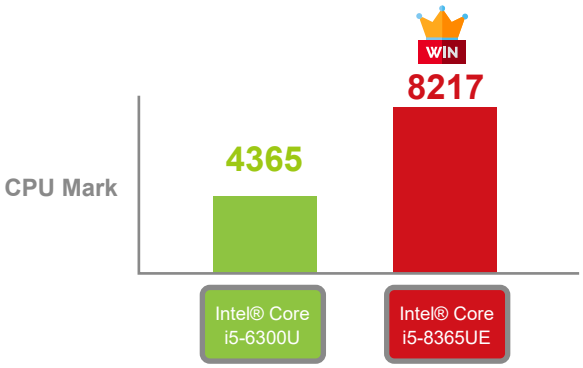

	Intel® Core™ i5-6300U	Intel® Core™ i5-8365UE
Cores	2	4
Threads	4	8
Process	14nm	14nm
TDP	15W	15W
Cache	3MB	6MB
Base Clock	2.4GHz	1.6GHz
Boost Clock	3.0GHz	4.1GHz

802.3bt PoE PD Supported

The PPC-FxxD-ULT5 industrial Power-over-Ethernet (PoE) modular panel PCs use a totally fanless cooling system and energy efficient CPU for optimal performance. The PoE-powered panel PC has been designed for use in Machine-to-Machine (M2M), Industrial Internet of Things (IIoT), and smart building automation.

PoE technology enables a facility to safely transfer electrical power, along with data, to touchscreen PCs over a standard category 5 cable in an Ethernet network. Thus, the panel PCs do not require modification of existing Ethernet cabling infrastructure and do not require a dedicated power source; making deployment fast, simple, and highly cost-effective. For added convenience and versatility, the PPC-FxxD-ULT5 panel PC with PoE function and P-CAP touchscreen can be mounted in panel, on wall or desktop.

GPOE-PD-BT01-R10

- Support PoE IEEE802.3 af/at/bt
- Support up to 71watt PD
- PCIe Mini form factor (IEI defined pinouts)

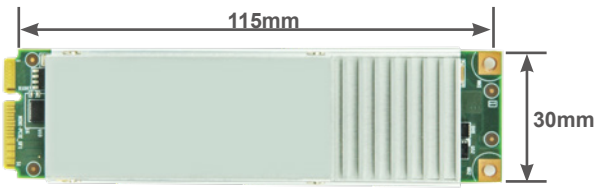

GPOE-PD-AT01-R10

- Support PoE IEEE802.3 af/at
- Support up to 25.5watt PD
- PCIe Mini form factor (IEI defined pinouts)

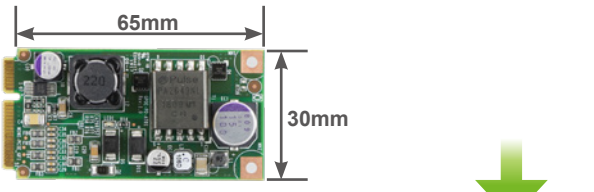



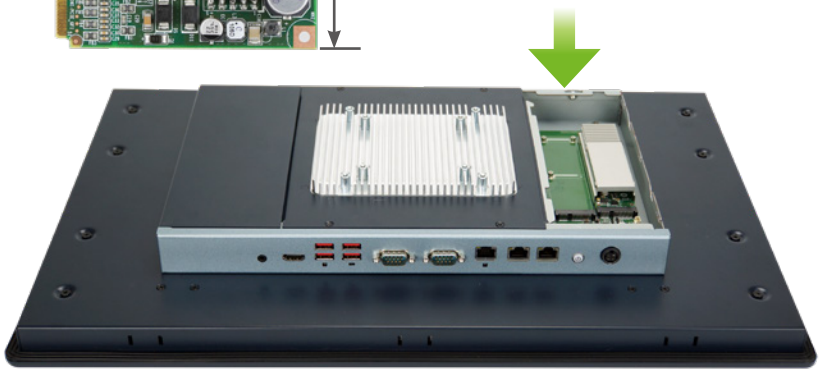

Modular Architecture

High Flexibility

The panel modules (available in 6 sizes) installed on the box PC can be swapped to provide up to 7 platform solutions for diverse applications

Quick Maintenance

The defective module can be separated and replaced with a new module on site; there is no need to unmount the whole system, guaranteeing minimum downtime.

Faster Time to Market

Build the system upon specific hardware (CPU, memory, add-on-card, etc.) requirement with faster time-to-market, reducing total cost of ownership for solution providers.

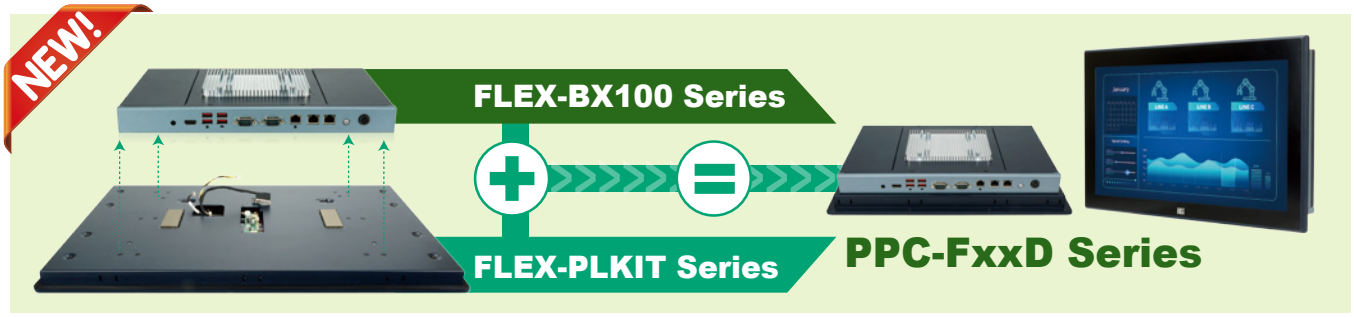



Backward-Compatible with PPC-F series

The cutout size of PPC-FxxD series is backward compatible with PPC-F series in panel mounting. There is no need to build a new fixture to integrate the PPC-FxxD series and it is easy to upgrade the performance from 4th Gen Intel® Core™ to 8th Gen Intel® Core™ with existing fixture.

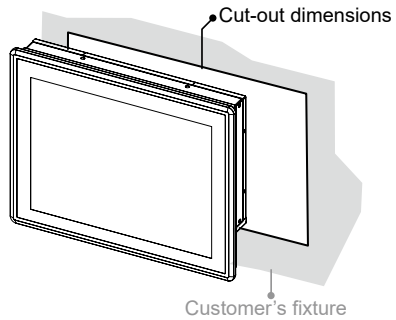

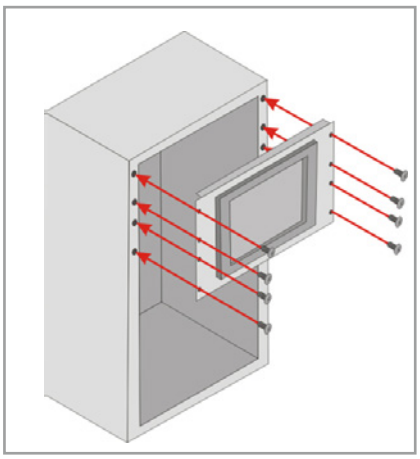

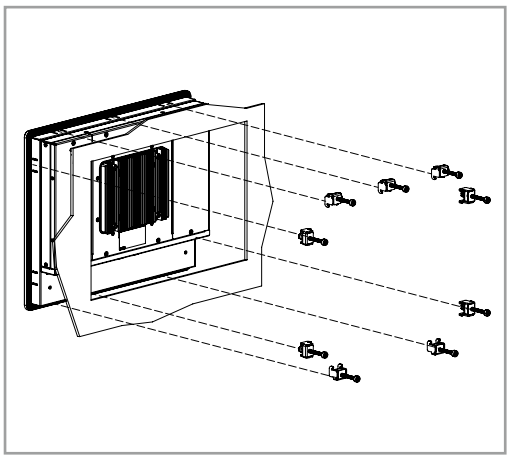

PPC-F-ULT5 Series Selection Guide





LCD Size		15”	15.6”
Model		PPC-F15D-ULT5	PPC-FW15D-ULT5
TFT LCD	LCD Size	15”	15.6”
	Max. Resolution	1024 x768	1366x768
	Brightness (cd/m²)	450	400
	Contrast Ratio	800:1	500:1
	LCD Color	16.2M	16.2M
	Pixel Pitch (mm)	0.29 x 0.29	0.252 x 0.252
	Viewing Angle (H/V)	160°/150°	170°/160°
	Backlight MTBF (Hrs)	70,000	50,000
Touch Screen	Touchscreen Type	Projected capacitive type with 10-point multitouch and anti-glare coating	
	Touch Controller	EETI EXC3000	
System	CPU	8th Genertion Intel® Core™ i5-8365UE 4.10GHz 8th Genertion Intel® Celeron® 4305UE 2.00GHz	
	Memory	2 x 260-pin 2400 MHz dual-channel DDR4 unbuffered SO-DIMM supporting up to 32GB	
	Graphics Engine	Intel® HD Graphics Gen 9 Engines with 16 low-power execution units, 4K codec decode	
	Ethernet	2 x Intel® I211,1 x Intel® I219	
Storage		2.5” HDD/SSD SATA 6Gb/s bay	
I/O Ports and Switches		4 x USB 3.2 Gen 2 (10Gbps) 1 x HDMI output 1 x RS-232/422/485 1 x RS-232 3 x GbE LAN (2 for PoE PD GbE LAN)	1 x 12V DC jack 1 x Power switch with LED indicator (blue) 1 x AT/ATX switch 1 x Line-out 1 x Reset button
Expansion Slots		1 x NGFF M.2 2230 A Key (PCIe x1, USB signal) 1 x NGFF M.2 2280 M Key (support PCIe 3.0 x4 NVMe) 2 x PoE PD module socket (by IEI pin definition)	
Thermal Solution		Fanless	
Watchdog Timer		Software Programmable support 1~255 sec. system reset	
Construction	Dimensions (mm) (W x H x D)	378.5 x 303 x 75	400.1 x 253.3 x 77.1
	Cutout Dimensions (W x H) (mm)	361.1 x 285.6	379.1 x 232.3
	Net Weight (kg)	6.1	7.1
	Color	PANTONE 296 C	
	Front Frame	Aluminum die-casting	
	Rear Cover	Sheet metal	
	Mounting	Wall mount, Panel mount, Rack mount	
Environmental	Operating Temp.	-10°C ~ 50°C (with air flow)	
	Storage Temp.	-20°C ~ 60°C	
	Humidity	10% ~ 95% (non-condensing)	
	Vibration	5~17Hz, 0.1 double amplitude displacement 17~640Hz 1.5G acceleration peak to peak	
	Shock	10G acceleration part to part (11ms)	
	Safety & EMC	CE / FCC class A	
Power Input		12V DC input	

PPC-F-ULT5 Series Selection Guide





LCD Size		17”	18.5”
Model		PPC-F17D-ULT5	PPC-FW19D-ULT5
TFT LCD	LCD Size	17”	18.5”
	Max. Resolution	1280 x 1024	1366 x 768
	Brightness (cd/m²)	350	400
	Contrast Ratio	1000:1	1000:1
	LCD Color	16.7M	16.7M
	Pixel Pitch (mm)	0.26 x 0.26	0.3 x 0.3
	Viewing Angle (H/V)	170°/160°	170°/160°
	Backlight MTBF (Hrs)	50,000	50,000
Touch Screen	Touchscreen Type	Projected capacitive type with 10-point multitouch and anti-glare coating	
	Touch Controller	EETI EXC3000	
System	CPU	8th Genertion Intel® Core™ i5-8365UE 4.10GHz 8th Genertion Intel® Celeron® 4305UE 2.00GHz	
	Memory	2 x 260-pin 2400 MHz dual-channel DDR4 unbuffered SO-DIMM supporting up to 32GB	
	Graphics Engine	Intel® HD Graphics Gen 9 Engines with 16 low-power execution units, 4K codec decode	
	Ethernet	2 x Intel® I211, 1 x Intel® I219	
Storage		2.5” HDD/SSD SATA 6Gb/s bay	
I/O Ports and Switches		4 x USB 3.2 Gen 2 (10Gbps) 1 x HDMI output 1 x RS-232/422/485 1 x RS-232 3 x GbE LAN (2 for PoE PD GbE LAN)	1 x 12V DC jack 1 x Power switch with LED indicator (blue) 1 x AT/ATX switch 1 x Line-out 1 x Reset button
Expansion Slots		1 x NGFF M.2 2230 A Key (PCIe x1, USB signal) 1 x NGFF M.2 2280 M Key (support PCIe 3.0 x4 NVMe) 2 x PoE PD module socket (by IEI pin definition)	
Thermal Solution		Fanless	
Watchdog Timer		Software Programmable support 1~255 sec. system reset	
Construction	Dimensions (mm) (W x H x D)	408.4 x 341.4 x 75.6	469.8 x 289.2 x 76.9
	Cutout Dimensions (mm)	391 x 324	447.8 x 257.2
	Net Weight (kgs)	7.2	7.3
	Color	PANTONE 296 C	
	Front Frame	Aluminum die-casting	
	Rear Cover	Sheet metal	
	Mounting	Wall mount, Panel mount, Rack mount	
Environmental	Operating Temp.	-10°C ~ 50°C (with air flow)	
	Storage Temp.	-20°C ~ 60°C	
	Humidity	10% ~ 95% (non-condensing)	
	Vibration	5~17Hz, 0.1 double amplitude displacement 17~640Hz 1.5G acceleration peak to peak	
	Shock	10G acceleration part to part (11ms)	
	Safety & EMC	CE / FCC class A	
Power Supply		12V DC input	

PPC-F-ULT5

15”/15.6” Panel PC Based on Intel® Whiskey Lake ULT Processor

Features

- 15”~17” Panel PC with Intel® Whiskey Lake Core™ i5-8365UE, Intel® Celeron® 4305UE
- Low power consumption and fanless design
- IP66-rated front panel for water and dust resistance
- Modular architecture
- VESA 100 mm standard mounting holes for varied mounting demands
- Support PoE PD power
- Support NVMe SSD





Specifications

Model		PPC-F15D-ULT5	PPC-FW15D-ULT5
TFT LCD	LCD Size	15”	15.6”
	Max. Resolution	1024 x 768	1366 x 768
	Brightness (cd/m²)	450	400
	Contrast Ratio	800:1	500:1
	LCD Color	16.2M	16.2M
	Pixel Pitch (mm)	0.29 x 0.29	0.252 x 0.252
	Viewing Angle (H/V)	160°/150°	170°/160°
	Backlight MTBF (Hrs)	70,000	50,000
Touch Screen	Touchscreen Type	Projected capacitive type with 10-point multitouch and anti-glare coating	
	Touch Controller	EETI EXC3000	
System	CPU	8th Genertion Intel® Core™ i5-8365UE 4.10GHz 8th Genertion Intel® Celeron® 4305UE 2.00GHz	
	Memory	2 x 260-pin 2400 MHz dual-channel DDR4 unbuffered SO-DIMM supporting up to 32GB	
	Graphics Engine	Intel® HD Graphics Gen 9 Engines with 16 low-power execution units, 4K codec decode	
	Ethernet	2 x Intel® I211,1 x Intel® I219	
Storage		2.5” HDD/SSD SATA 6Gb/s bay	
I/O Ports and Switches		4 x USB 3.2 Gen 2 (10Gbps) 1 x HDMI output 1 x RS-232/422/485 1 x RS-232 3 x GbE LAN (2 for PoE PD GbE LAN) 1 x 12V DC jack 1 x Power switch with LED indicator (blue) 1 x AT/ATX switch 1 x Line-out 1 x Reset button	
Expansion Slots		1 x NGFF M.2 2230 A Key (PCIe x1, USB signal) 1 x NGFF M.2 2280 M Key (support PCIe 3.0 x4 NVMe) 2 x PoE PD module socket (by IEI pin definition)	
Thermal Solution		Fanless	
Watchdog Timer		Software Programmable support 1~255 sec. system reset	
Construction	Dimensions (mm) (W x H x D)	378.5 x 303 x 75	400.1 x 253.3 x 77.1
	Cutout Dimensions (W x H) (mm)	361.1 x 285.6	379.1 x 232.3
	Net Weight (kg)	6.1	7.1
	Color	PANTONE 296 C	
	Front Frame	Aluminum die-casting	
	Rear Cover	Sheet metal	
	Mounting	Wall mount, Panel mount, Rack mount	
Environmental	Operating Temp.	-10°C ~ 50°C (with air flow)	
	Storage Temp.	-20°C ~ 60°C	
	Humidity	10% ~ 95% (non-condensing)	
	Vibration	5~17Hz, 0.1 double amplitude displacement 17~640Hz 1.5G acceleration peak to peak	
	Shock	10G acceleration part to part (11ms)	
	Safety & EMC	CE / FCC class A	
Power Input		12V DC input	

PPC-F-ULT5

17”/18.5” Panel PC Based on Intel® Whiskey Lake ULT Processor

Features

- 17”~18.5” Panel PC with Intel® Whiskey Lake Core™ i5-8365UE, Intel® Celeron® 4305UE
- Low power consumption and fanless design
- IP66-rated front panel for water and dust resistance
- Modular architecture
- VESA 100 mm standard mounting holes for varied mounting demands
- Support PoE PD power
- Support NVMe SSD





Specifications

Model		PPC-F17D-ULT5	PPC-FW19D-ULT5
TFT LCD	LCD Size	17”	18.5”
	Max. Resolution	1280 x 1024	1366 x 768
	Brightness (cd/m²)	350	400
	Contrast Ratio	1000:1	1000:1
	LCD Color	16.7M	16.7M
	Pixel Pitch (mm)	0.26 x 0.26	0.3 x 0.3
	Viewing Angle (H/V)	170°/160°	170°/160°
	Backlight MTBF (Hrs)	50,000	50,000
Touch Screen	Touchscreen Type	Projected capacitive type with 10-point multitouch and anti-glare coating	
	Touch Controller	EETI EXC3000	
System	CPU	8th Genertion Intel® Core™ i5-8365UE 4.10GHz 8th Genertion Intel® Celeron® 4305UE 2.00GHz	
	Memory	2 x 260-pin 2400 MHz dual-channel DDR4 unbuffered SO-DIMM supporting up to 32GB	
	Graphics Engine	Intel® HD Graphics Gen 9 Engines with 16 low-power execution units, 4K codec decode	
	Ethernet	2 x Intel® I211, 1 x Intel® I219	
Storage		2.5” HDD/SSD SATA 6Gb/s bay	
I/O Ports and Switches		4 x USB 3.2 Gen 2 (10Gbps) 1 x HDMI output 1 x RS-232/422/485 1 x RS-232 3 x GbE LAN (2 for PoE PD GbE LAN) 1 x 12V DC jack 1 x Power switch with LED indicator (blue) 1 x AT/ATX switch 1 x Line-out 1 x Reset button	
Expansion Slots		1 x NGFF M.2 2230 A Key (PCIe x1, USB signal) 1 x NGFF M.2 2280 M Key (support PCIe 3.0 x4 NVMe) 2 x PoE PD module socket (by IEI pin definition)	
Thermal Solution		Fanless	
Watchdog Timer		Software Programmable support 1~255 sec. system reset	
Construction	Dimensions (mm) (W x H x D)	408.4 x 341.4 x 75.6	469.8 x 289.2 x 76.9
	Cutout Dimensions (mm)	391 x 324	447.8 x 257.2
	Net Weight (kgs)	7.2	7.3
	Color	PANTONE 296 C	
	Front Frame	Aluminum die-casting	
	Rear Cover	Sheet metal	
	Mounting	Wall mount, Panel mount, Rack mount	
Environmental	Operating Temp.	-10°C ~ 50°C (with air flow)	
	Storage Temp.	-20°C ~ 60°C	
	Humidity	10% ~ 95% (non-condensing)	
	Vibration	5~17Hz, 0.1 double amplitude displacement 17~640Hz 1.5G acceleration peak to peak	
	Shock	10G acceleration part to part (11ms)	
	Safety & EMC	CE / FCC class A	
Power Supply		12V DC input	

Ordering Information

Part No.		Description
15”	PPC-F15D-ULT5-i5/4G/PC-R10	15” 450 cd/m² 1024 x 768 Panel PC with 14nm 8th gen. Intel® Whiskey Lake Core™ i5-8365UE TDP 15W on-board Processor (ULT), 4GB DDR4 RAM x1, 12VDC input, PCAP touch with AG, R10
	PPC-F15D-ULT5-C/4G/PC-R10	15” 450 cd/m² 1024 x 768 Panel PC with 14nm 8th gen. Intel® Whiskey Lake Celeron® 4305UE TDP 15W on-board Processor (ULT), 4GB DDR4 RAM x1, 12VDC input, PCAP touch with AG, R10
15.6”	PPC-FW15D-ULT5-i5/4G/PC-R10	15.6” 400 cd/m² 1366 x 768 Panel PC with 14nm 8th gen. Intel® Whiskey Lake Core™ i5-8365UE TDP 15W on-board Processor (ULT), 4GB DDR4 RAM x1, 12VDC input, PCAP touch with AG, R10
	PPC-FW15D-ULT5-C/4G/PC-R10	15.6” 400 cd/m² 1366 x 768 Panel PC with 14nm 8th gen. Intel® Whiskey Lake Celeron® 4305UE TDP 15W on-board Processor (ULT), 4GB DDR4 RAM x1, 12VDC input, PCAP touch with AG, R10
17”	PPC-F17D-ULT5-i5/4G/PC-R10	17” 350 cd/m² 1280 x 1024 Panel PC with 14nm 8th gen. Intel® Whiskey Lake Core™ i5-8365UE TDP 15W on-board Processor (ULT), 4GB DDR4 RAM x1, 12VDC input, PCAP touch with AG, R10
	PPC-F17D-ULT5-C/4G/PC-R10	17” 350 cd/m² 1280 x 1024 Panel PC with 14nm 8th gen. Intel® Whiskey Lake Celeron® 4305UE TDP 15W on-board Processor (ULT), 4GB DDR4 RAM x1, 12VDC input, PCAP touch with AG, R10
18.5”	PPC-FW19D-ULT5-i5/4G/PC-R10	18.5” 400 cd/m² 1366 x 768 Panel PC with 14nm 8th gen. Intel® Whiskey Lake Core™ i5-8365UE TDP 15W on-board Processor (ULT), 4GB DDR4 RAM x1, 12VDC input, PCAP touch with AG, R10
	PPC-FW19D-ULT5-C/4G/PC-R10	18.5” 400 cd/m² 1366 x 768 Panel PC with 14nm 8th gen. Intel® Whiskey Lake Celeron® 4305UE TDP 15W on-board Processor (ULT), 4GB DDR4 RAM x1, 12VDC input, PCAP touch with AG, R10

Options

Item	PPC-F15D	PPC-FW15D	PPC-F17D	PPC-FW19D
Arm	ARM-31-RS			
Stand	SAND-A21-R10 STAND-C19-R10			
Wall Mount Kit	WK-190MS-R10			
Panel Mount Kit	FPK-12-R10	FPK-14-R10	FPK-13-R10	FPK-13-R10
Rack Mount Kit	FRK15C-R10	FRKW15C-R10	FRK17C-R10	FRKW19C-R10
PoE PD Kit	GPOE-PD-AT01-R10 (PoE IEEE802.3 af/at, 25.5W) GPOE-PD-BT01-R10 (PoE IEEE802.3 af/at/bt, 71W)			
WiFi Kit	EMB-WIFI-KIT03E-R10 (2T2R, 802.11 ac/a/b/g/n and BT V4.1,NGFF 2230 Type A-E)			

Fully Integrated I/O

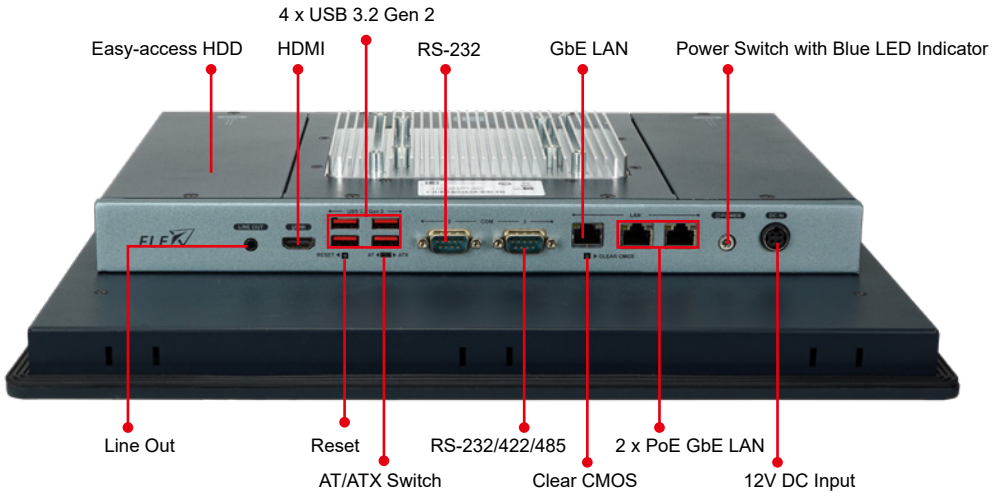

PPC-F15D-ULT5 Dimensions

(Unit: mm)

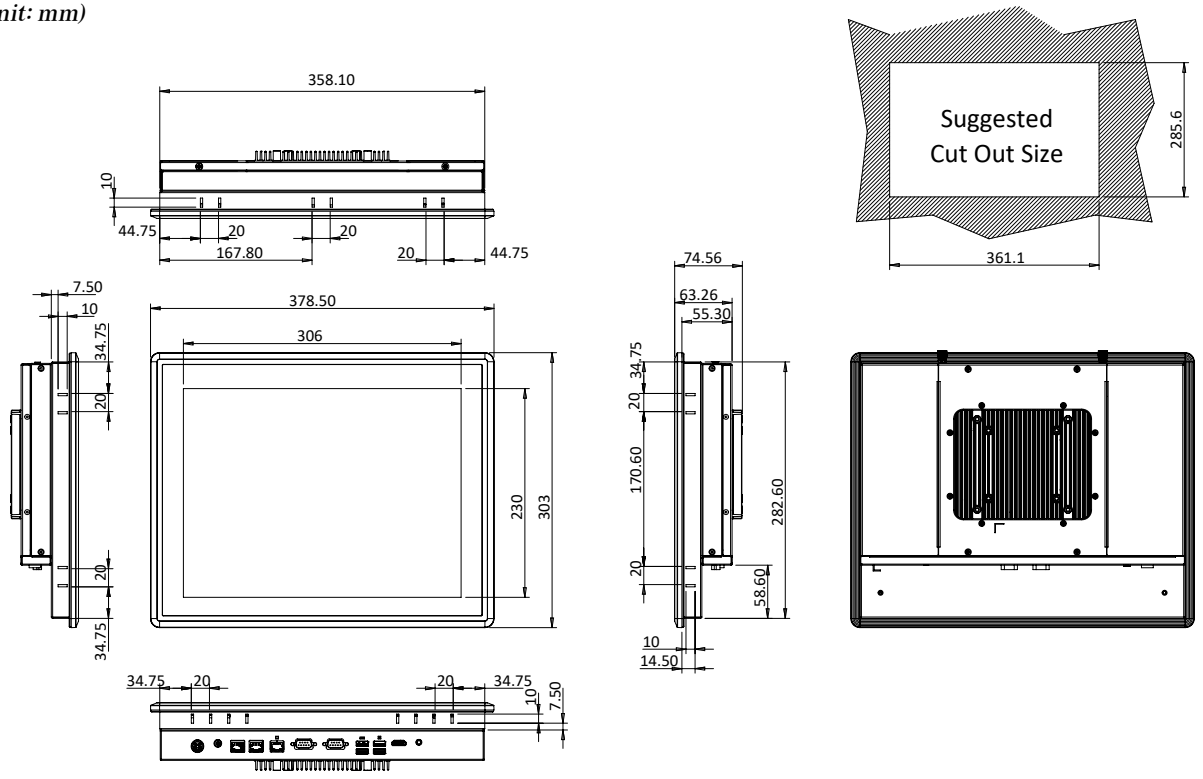

PPC-FW15D-ULT5 Dimensions

(Unit: mm)

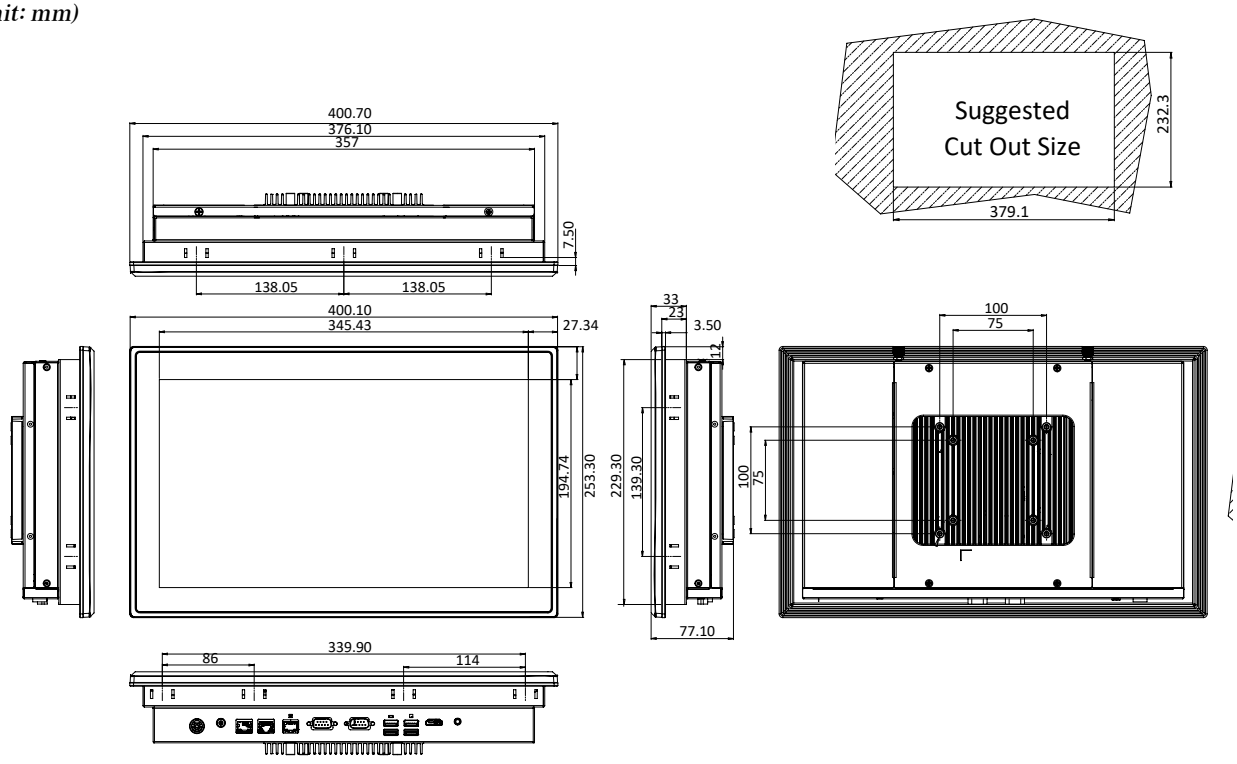

PPC-F17D-ULT5 Dimensions

(Unit: mm)

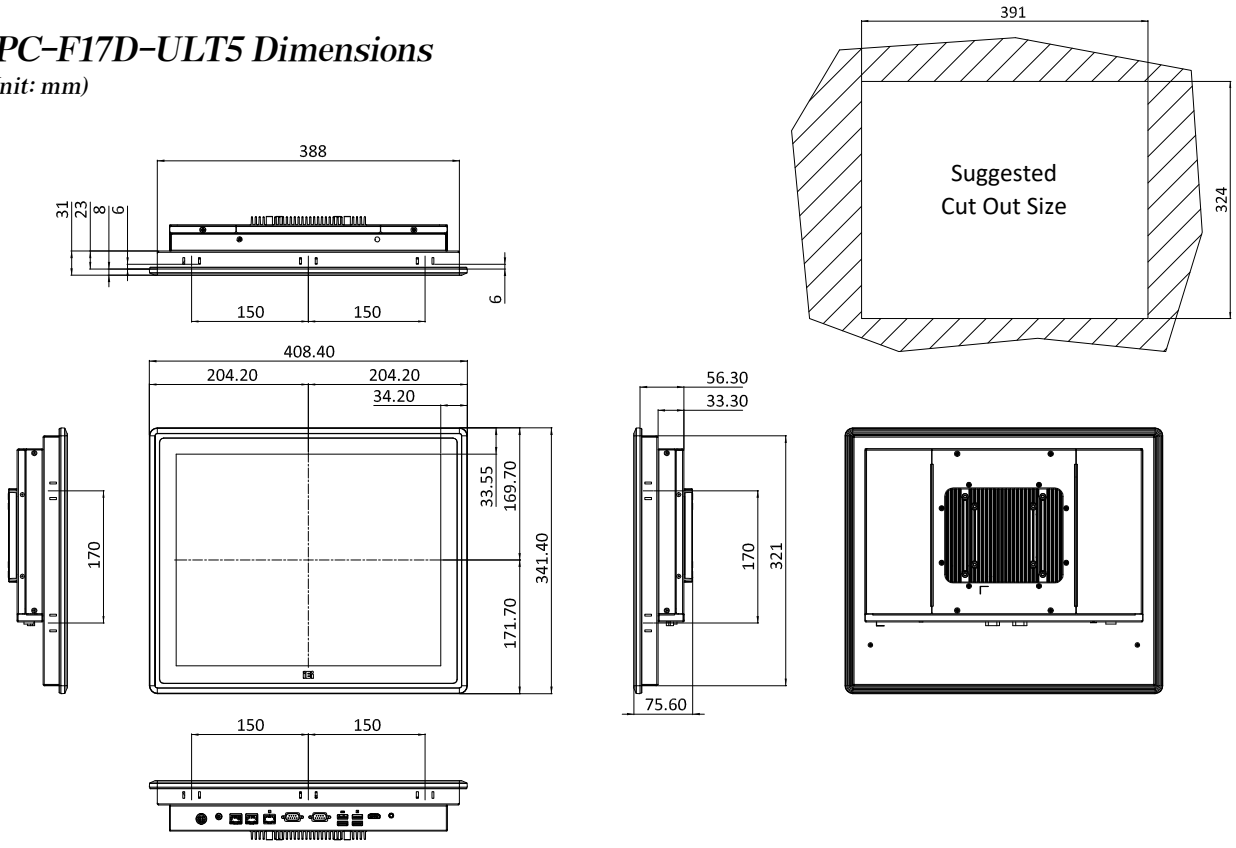

PPC-FW19D-ULT5 Dimensions

(Unit: mm)

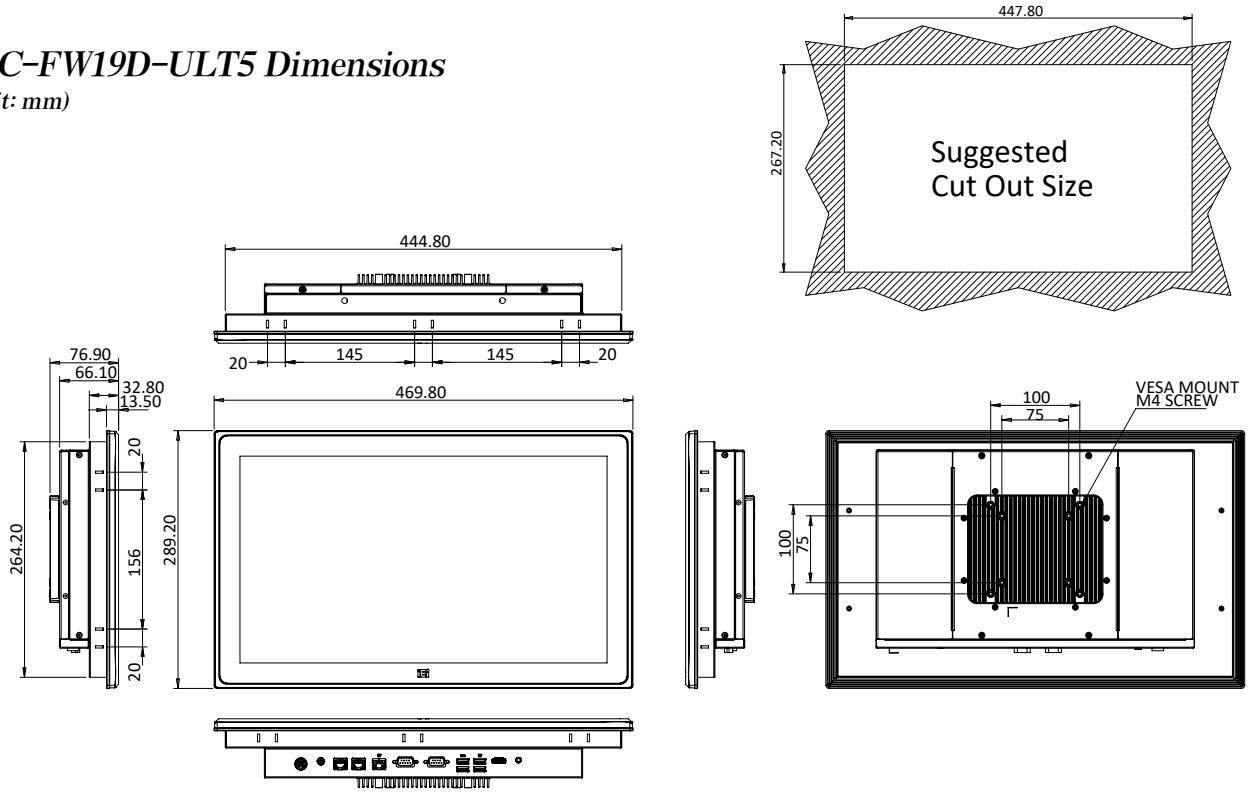

PPC-F-Q370 Series

8th, 9th Generation Intel® Core™ Desktop Processors

IEI FLEX series adopts the 8th, 9th Generation Intel® Core™ desktop processor, of which the Core i7 is moving to six cores with Hyper Threading, Core i5 is moving to six cores, and Core i3 is moving to four cores. The equipped LGA 1151 socket supports a wide range of performance options up to 65W TDP processors. The dual DDR4 DIMM slots with more direct trace routes support up to 64GB of memory.



CPU Generation	P/N	Lithography	# of Cores	# of Threads	Frequency	TDP
8th Gen. Intel® Coffee Lake	i7-8700T	14nm	6	12	2.40GHz	35W
	i5-8500	14nm	6	6	3.0GHz	65W
	i5-8500T	14nm	6	6	2.10GHz	35W
	i3-8100T	14nm	4	4	2.40GHz	35W
	P-G5400T	14nm	2	4	3.10GHz	35W
7th Gen. Intel® Kaby Lake	i7-7700T	14nm	4	8	2.90GHz	35W
	i5-7500T	14nm	4	4	2.70GHz	35W
	i3-7100T	14nm	2	4	3.40GHz	35W
	C-G4900T	14nm	2	2	2.9GHz	35W

Breakthrough the Bottleneck of DMI 3.0

The signal of the two PCIe 3.0 by 8 slots directly connect to CPU instead of DMI 3.0 channel. By doing this, the PCIe 3.0 x8 add-on cards can run with lower latency and achieve complete AI card performance.

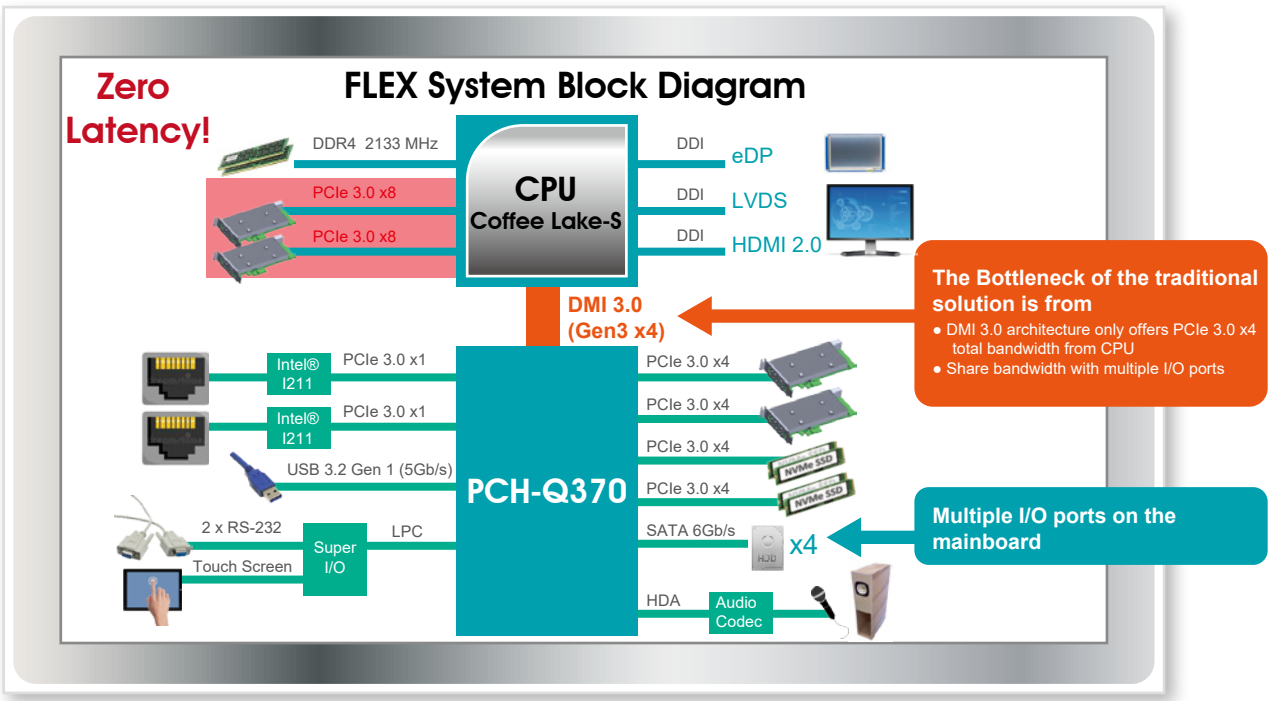

4-Bay Hot-Swappable HDD RAID 0/1/5/10 Protection

The FLEX series offers four 2.5”HDD bays with high speed SATA 6Gb/s interface that can expand storage capabilities and enable fast data transfers. The equipped Intel Q370 chipset provides reliable and high performance hardware RAID protection to back-up your media and critical information. You can configure the RAID 0/1/5/10 from the BIOS menu to increase performance and/or provide automatic protection against data loss from drive failure.

What type of RAID do I need?

- RAID 0 (Striping) -The highest performing level
- RAID 1 (Mirroring) -Data safety
- RAID 5 (Distributed Parity)-offers both data safety and performance
- RAID 10 (combining mirroring and striping) data safety and big data volume

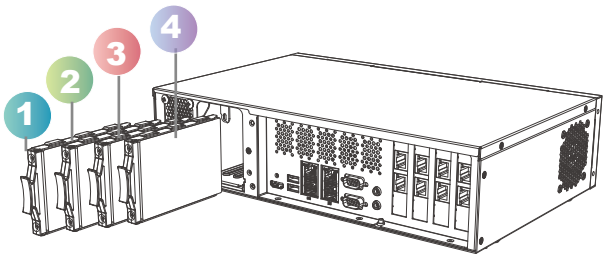

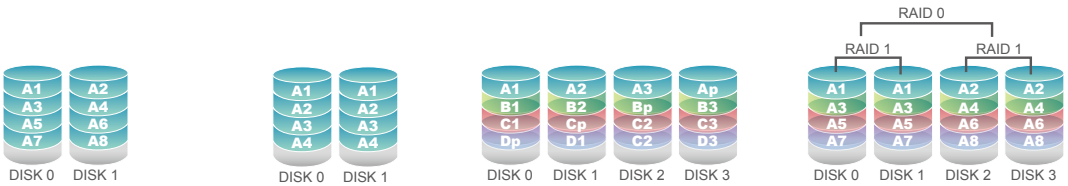

Features	RAID 0	RAID 1	RAID 5	RAID 10
Minimum # Drives	2	2	3	4
Data Protection	No	Single-drive failure	Single-drive failure	Up to one disk failure in each sub-array
Capacity Utilization	100%	50%	67%-94%	50%
Typical Application	High end workstations, data logging, real-time rendering, very transitory data	Operating system, transaction database	Data warehousing, web serving, archiving	Fast databases, applictaion servers

Secured and Strong HDD Bays



STEP 1
Unlock the HDD cover with the secured key



STEP 2
Open the HDD cover and you will see four drive trays



STEP 3
Pull out one of the drive trays



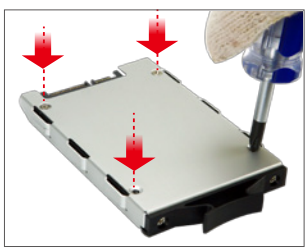

STEP 4
Mount the 2.5” SATA HDD /SSD on to the mounting bracket with 4 screws on the bottom of the drive enclosure



STEP 5
Slide the hard drive together with the bracket till the drive is fully inserted into the SATA connector

Modular Architecture

- Cut-out dimensions are backward compatible to PPC-F series, easy to upgrade your existing project
- More than 12 SKUs by various monitor choices: 15"/17"/15.6"/18.5"/22"/24"
- PCAP touch screen
- 250W/350W DC power supply
- Easy assembly and maintenance
- One-stop shopping and building your own system to accelerate time to market

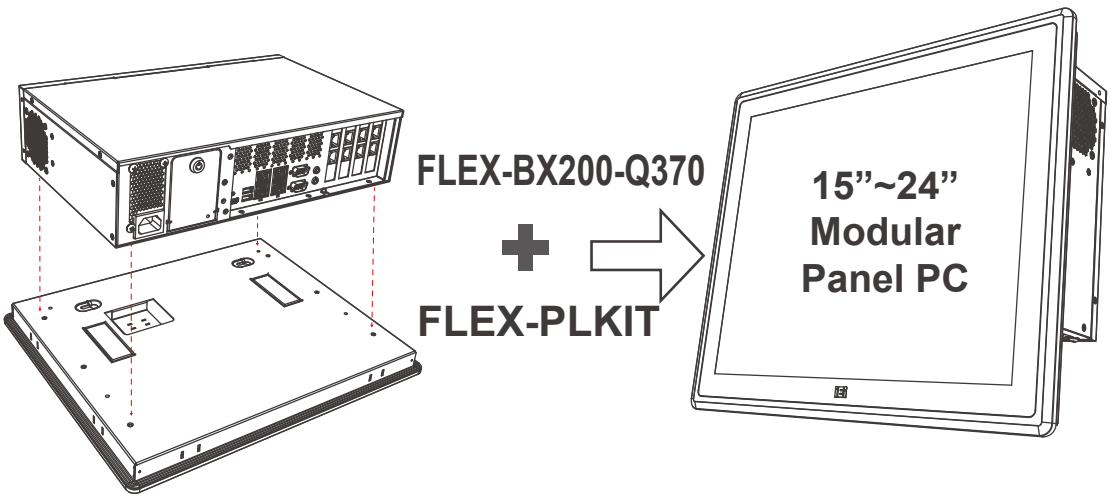

Backward Compatible with PPC-F-Q370 Series

The cutout size of the PPC-FxxC series is backward compatible with the previous PPC-F series in panel mounting. There is no need to build a new fixture for the PPC-FxxC series, making it easy to upgrade the performance from 4th Gen. Intel® Core™ to 8th Gen. Intel® Core™ with the existing fixture.

Example

PPC-F17C-Q370 Cut-out Dimensions (Unit: mm)

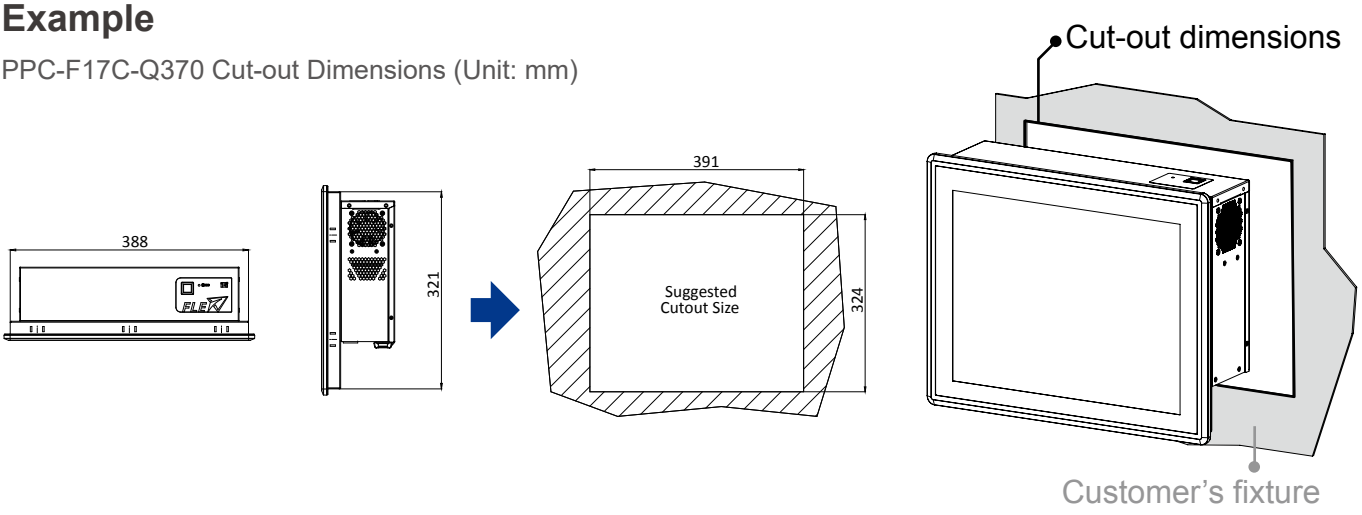

IP66 Front Panel Protection

PPC-FxxC series provides front mechanical IP dust and water resistant design. The sealing concept of PPC-FxxC contains the following product sealing to offer rugged IP66 front protection:

- PCAP touchscreen to front aluminum bezel with waterproof glue dispensing
- Internal dust sealing poron from LCD to the touchscreen
- Rubber sealing for mounting to the equipment

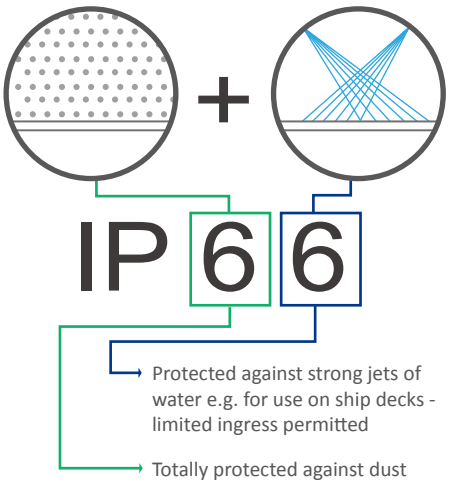



Test for protection against dust

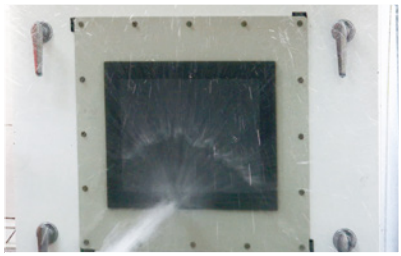

Test for protection against water

Anti-glare and UV-resistant Touch Screen Ideal for Outdoor Applications

Etching anti-glare, never peel off!

The PPC-FxxC series is built with anti-glare touch screen, which has lower reflection compared to normal touch screen. The reflection will reduce from 8% to 1% and it will eliminate the interference of shine and lights on displays and improve the screen clarity.



UV-resistant ensures reliable continuous operation for mission critical applications

Outdoor applications exposing to direct sunlight and long-term ultraviolet (UV) light will affect PCAP panel appearance such as PCAP top glass hard coat cracking and hazing, or varying degrees of yellowing and bubbling. Thus, IEI offers a UV resistant PCAP touch solution to equip outdoor industrial systems exposed to direct long-term sunlight with anti-UV characteristics.

- Blocks UV wavelengths less than ≈340nm
- Meets ASTM G154 performance criteria Cycle 1 for 1000 hours

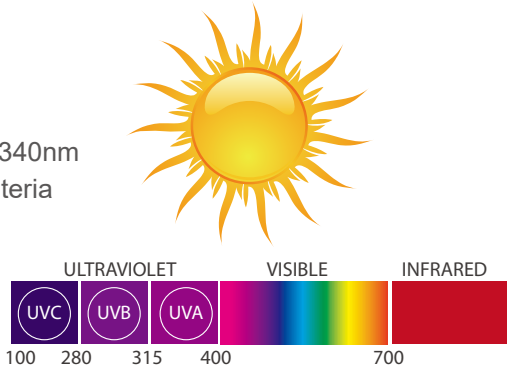



Four PCIe x4/x8 Low Profile Expansion Slots

The PPC-FxxC series supports multiple PCIe slots including two PCIe 3.0 x8 and two PCIe 3.0 x4 slots, which are compatible with standard low profile add-on cards, to meet different edge inference computing applications.

- **High Speed:** 10GbE card, fiber network card
- **I/O card:** Serial port card, USB card, LAN card, etc.
- **AI accelerating card:** VPU card, FPGA, GPU card, etc.
- **Wireless card:** Wi-Fi card, mobile wireless card, etc.
- **Storage card**

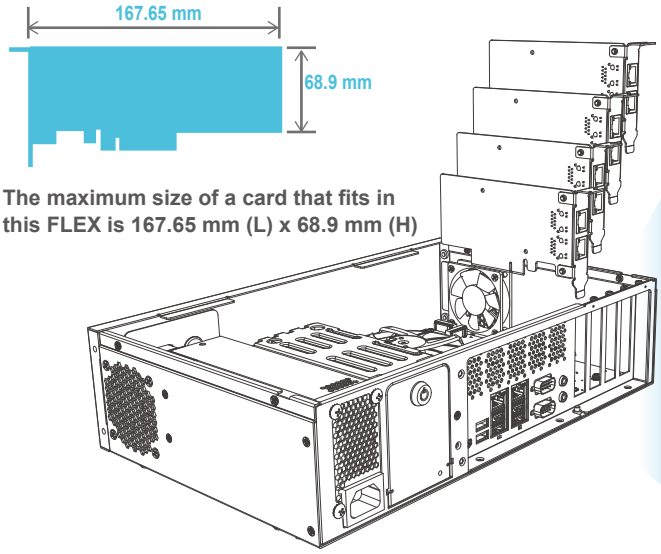

The maximum size of a card that fits in this FLEX is 167.65 mm (L) x 68.9 mm (H)

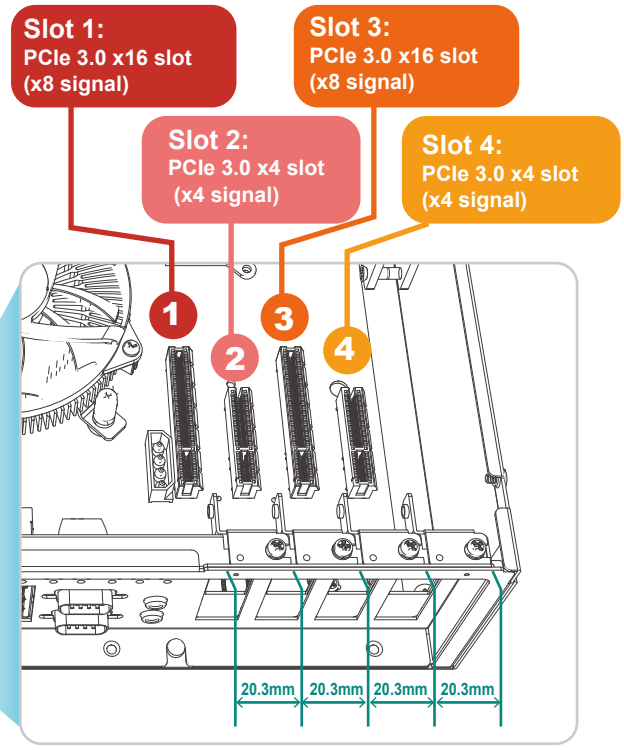

Flexible Deployment

Rack Mount

The PPC-FxxC with rack mounting kit can easily fit the standard 19" cabinet for industrial applications.

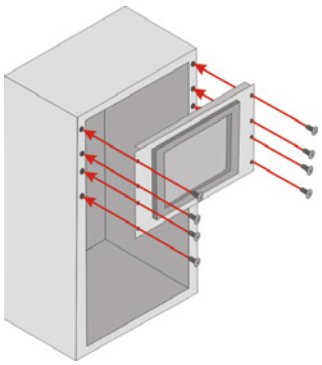

Panel Mount

Panel mounting is the mounting way that mounts product into an opening of a customer's fixture from the front and secured from the rear. All user controls are located on the rear of the mechanism, making the panel mount displays a good choice for applications requiring a display with no external or exposed controls such as CNC equipment, gaming, casino system, ATM, and kiosk.

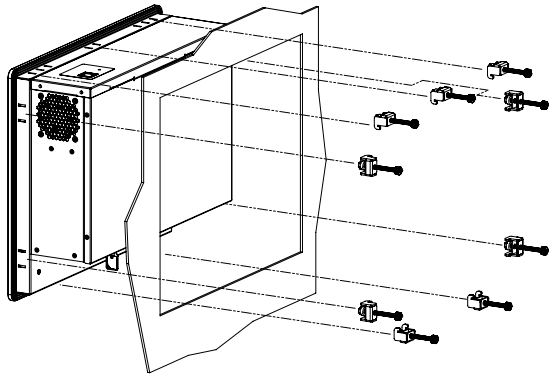

PPC-F-Q370 Series Selection Guide





LCD Size		15”	W15”
Model		PPC-F15C-Q370	PPC-FW15C-Q370
TFT LCD	LCD Size	15”	15.6"
	Max. Resolution	1024x768	1366x768
	Brightness (cd/m²)	450	400
	Contrast Ratio	800:1	500:1
	LCD Color	16.2M	16.2M
	Viewing Angle (H/V)	160°/150°	170°/160°
	Backlight MTBF (Hrs)	70,000	50,000
Touch Screen		PCAP touch with 10-point multitouch, anti-glare coating	
Mainboard	CPU	8th Generation Intel® Core™ i7/i5/i3 and Pentium® processor in the LGA 1151 package	
	Chipset	Intel® Q370 Chipset	
	Memory	2 x 288-pin 2666/2400 MHz dual-channel DDR4 unbuffered DIMM slot supporting up to 64GB	
	Graphics Engine	Intel® HD Graphics Gen 9 Engines with 16 low-power execution units, supports DX2015, OpenGL 5.X and OpenCL 2 x, ES 2.0	
	Ethernet	Intel® I211 & I219 controller	
Storage		(1) 4 x Accessible 2.5” SATA 6Gb/s HDD/SSD bay (RAID 0/1/5/10 support) with LED indicator (2) 2 x M.2 2280 PCIe Gen 3.0 x4 NVMe™ SSD socket	
I/O Ports and Switches		1 x HDMI output 2 x GbE LAN 6 x USB 3.2 Gen 1 (5Gb/s) Type-A 2 x RS-232 DB-9 type 1 x Mic in	1 x Line out 1 x AC power in Inlet Power button with power LED (power on=Blue) AT/ATX mode switch Reset button
Expansion Slots		2 x PCIe 3.0 by 8 (by 16 slot) 2 x PCIe 3.0 by 4 (maximum card size supported: 68 mm x 167 mm) 1 x NGFF M.2 (2230) A Key socket (support Wi-Fi) 1 x NGFF M.2 (3042) B Key socket (support WWAN wits SIM slot)	
Thermal Solution		Smart Fan	
Power Supply		AC input ATX power supply 1. 250W power supply - Input: 115VAC~230VAC, 50/60Hz - Output (max.): 3.3V@12A, 5V@14A, 12V@25A, -12V@0.3A,+5Vsb@3A 2. 350W power supply (Build to Order) - Input: 115VAC~264VAC, 50/60Hz - Output (max.): 3.3V@14A, 5V@16A, 12V@29A, -12V@0.3A,+5Vsb@3A -Efficiency: Full load (100%) 87%, Typical load (50%) 90%, Light load (20%) 87%	
Watchdog Timer		Software Programmable support 1~255 sec. system reset	
Construction	IP Rating	IP66-rated front panel	
	Chassis Construction	Metal Housing	
	Mounting	Rack/Panel Mount	
	Color	Front Bezel : Cyan-blue (PSM 296C), Others: Black C	
	Cut-out dimensions (LxDxH) (mm)	361.1 x 285.6	379.1 x 232.3
	Dimensions (LxDxH) (mm)	378.5 x 303 x 118	400.1 x 253.3 x 121
Environmental	Operating Temperature	-20°C ~ 50°C (with SSD and up to TDP 65W processor) -20°C ~ 40°C (with HDD or add-on cards without fan)	
	Storage Temperature	-30°C ~ 60°C	
	Operating Humidity	5% ~95%, non-condensing	
	Vibration	5~17Hz, 0.1 double amplitude displacement 17~640Hz 1.5G acceleration peak to peak	
	Shock	10G acceleration part to part (11ms)	

PPC-F-Q370 Series Selection Guide





LCD Size		17”	18.5”
Model		PPC-F17C-Q370	PPC-FW19C-Q370
TFT LCD	LCD Size	17”	18.5"
	Max. Resolution	1280x1024	1366x768
	Brightness (cd/m²)	350	400
	Contrast Ratio	1000:1	1000:1
	LCD Color	16.7M	16.7M
	Viewing Angle (H/V)	170°/160°	170°/160°
	Backlight MTBF (Hrs)	50,000	50,000
Touch Screen		PCAP touch with 10-point multitouch, anti-glare coating	
Mainboard	CPU	8th Generation Intel® Core™ i7/i5/i3 and Pentium® processor in the LGA 1151 package	
	Chipset	Intel® Q370 Chipset	
	Memory	2 x 288-pin 2666/2400 MHz dual-channel DDR4 unbuffered DIMM slot supporting up to 64GB	
	Graphics Engine	Intel® HD Graphics Gen 9 Engines with 16 low-power execution units, supports DX2015, OpenGL 5.X and OpenCL 2 x, ES 2.0	
	Ethernet	Intel® I211 & I219 controller	
Storage		(1) 4 x Accessible 2.5” SATA 6Gb/s HDD/SSD bay (RAID 0/1/5/10 support) with LED indicator (2) 2 x M.2 2280 PCIe Gen 3.0 x4 NVMe™ SSD socket	
I/O Ports and Switches		1 x HDMI output 2 x GbE LAN 6 x USB 3.2 Gen 1 (5Gb/s) Type-A 2 x RS-232 DB-9 type 1 x Mic in	1 x Line out 1 x AC power in Inlet Power button with power LED (power on=Blue) AT/ATX mode switch Reset button
Expansion Slots		2 x PCIe 3.0 by 8 (by 16 slot) 2 x PCIe 3.0 by 4 (maximum card size supported: 68 mm x 167 mm) 1 x NGFF M.2 (2230) A Key socket (support Wi-Fi) 1 x NGFF M.2 (3042) B Key socket (support WWAN wits SIM slot)	
Thermal Solution			Smart Fan
Power Supply		AC input ATX power supply 1. 250W power supply - Input: 115VAC~230VAC, 50/60Hz - Output (max.): 3.3V@12A, 5V@14A, 12V@25A, -12V@0.3A,+5Vsb@3A 2. 350W power supply (Build to Order) - Input: 115VAC~264VAC, 50/60Hz - Output (max.): 3.3V@14A, 5V@16A, 12V@29A, -12V@0.3A,+5Vsb@3A -Efficiency: Full load (100%) 87%, Typical load (50%) 90%, Light load (20%) 87%	
Watchdog Timer		Software Programmable support 1~255 sec. system reset	
Construction	IP Rating	IP66-rated front panel	
	Chassis Construction	Metal Housing	
	Mounting	Rack/Panel Mount	
	Color	Front Bezel : Cyan-blue (PSM 296C), Others: Black C	
	Cut-out dimensions (LxDxH) (mm)	391 x 324	447.8 x 267.2
	Dimensions (LxDxH) (mm)	408.4 x 341.4 x 119	469.8 x 289.2 x 120.8
Environmental	Operating Temperature	-20°C ~ 50°C (with SSD and up to TDP 65W processor) -20°C ~ 40°C (with HDD or add-on cards without fan)	
	Storage Temperature	-30°C ~ 60°C	
	Operating Humidity	5% ~95%, non-condensing	
	Vibration	5~17Hz, 0.1 double amplitude displacement 17~640Hz 1.5G acceleration peak to peak	
	Shock	10G acceleration part to part (11ms)	

PPC-F-Q370 Series

15”/15.6” AI Ready Panel PC Based on Intel® OpenVINO™ toolkit



Features

- 15”/15.6” Panel PC with 8th/9th Generation LGA 1151 Intel® Core™ i7/i5/i3 and Pentium® processor
- Four hot-swappable and accessible HDD drive bays, support RAID 0/1/5/10
- Two PCIe 3.0 by 4 and two PCIe 3.0 by 8 slots
- M.2 2280 PCIe Gen 3.0 x4 NVMe™ SSD support

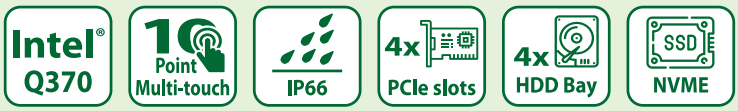

Specifications

Model		PPC-F15C-Q370	PPC-FW15C-Q370
TFT LCD	LCD Size	15”	15.6"
	Max. Resolution	1024x768	1366x768
	Brightness (cd/m²)	450	400
	Contrast Ratio	800:1	500:1
	LCD Color	16.2M	16.2M
	Viewing Angle (H/V)	160°/150°	170°/160°
	Backlight MTBF (Hrs)	70,000	50,000
Touch Screen		PCAP touch with 10-point multitouch, anti-glare coating	
Mainboard	CPU	8th/9th Generation Intel® Core™ i7/i5/i3 and Pentium® processor in the LGA 1151 package	
	Chipset	Intel® Q370 Chipset	
	Memory	2 x 288-pin 2666/2400 MHz dual-channel DDR4 unbuffered DIMM slot supporting up to 64GB	
	Graphics Engine	Intel® HD Graphics Gen 9 Engines with 16 low-power execution units, supports DX2015, OpenGL 5.X and OpenCL 2 x, ES 2.0	
	Ethernet	Intel® I211 & I219 controller	
Storage		(1) 4 x Accessible 2.5” SATA 6Gb/s HDD/SSD bay (RAID 0/1/5/10 support) with LED indicator (2) 1 x M.2 2280 PCIe Gen 3.0 x4 NVMe™ SSD socket	
I/O Ports and Switches		1 x HDMI output 2 x GbE LAN 6 x USB 3.2 Gen 1 (5Gb/s) Type-A 2 x RS-232 DB-9 type 1 x Mic in	1 x Line out 1 x AC power in Inlet Power button with power LED (power on=Blue) AT/ATX mode switch Reset button
Expansion Slots		2 x PCIe 3.0 by 8 (by 16 slot) 2 x PCIe 3.0 by 4 (maximum card size supported: 68 mm x 167 mm) 1 x NGFF M.2 (2230) A Key socket (support Wi-Fi) 1 x NGFF M.2 (3042) B Key socket (support WWAN wits SIM slot)	
Thermal Solution		Smart Fan	
Power Supply		AC input ATX power supply 1. 250W power supply - Input: 115VAC~230VAC, 50/60Hz - Output (max.): 3.3V@12A, 5V@14A, 12V@25A, -12V@0.3A,+5Vsb@3A 2. 350W power supply (Build to Order) - Input: 115VAC~264VAC, 50/60Hz - Output (max.): 3.3V@14A, 5V@16A, 12V@29A, -12V@0.3A,+5Vsb@3A -Efficiency: Full load (100%) 87%, Typical load (50%) 90%, Light load (20%) 87%	
Watchdog Timer		Software Programmable support 1~255 sec. system reset	
Construction	IP Rating	IP66-rated front panel	
	Chassis Construction	Metal Housing	
	Mounting	Rack/Panel Mount	
	Color	Front Bezel : Cyan-blue (PSM 296C), Others: Black C	
	Cut-out dimensions (LxDxH) (mm)	361.1 x 285.6	379.1 x 232.3
	Dimensions (LxDxH) (mm)	378.5 x 303 x 118	400.1 x 253.3 x 121
Environmental	Operating Temperature	-20°C ~ 50°C (with SSD and up to TDP 65W processor) -20°C ~ 40°C (with HDD or add-on cards without fan)	
	Storage Temperature	-30°C ~ 60°C	
	Operating Humidity	5% ~95%, non-condensing	
	Vibration	5~17Hz, 0.1 double amplitude displacement 17~640Hz 1.5G acceleration peak to peak	
	Shock	10G acceleration part to part (11ms)	
	Safety and EMC	CE & FCC Class A certified	

PPC-F-Q370 Series

17”/18.5” AI Ready Panel PC Based on Intel® OpenVINO™ toolkit



Features

- 17”/18.5" Panel PC with 8th/9th Generation LGA 1151 Intel® Core™ i7/i5/i3 and Pentium® processor
- Four hot-swappable and accessible HDD drive bays, support RAID 0/1/5/10
- Two PCIe 3.0 by 4 and two PCIe 3.0 by 8 slots
- M.2 2280 PCIe Gen 3.0 x4 NVMe™ SSD support

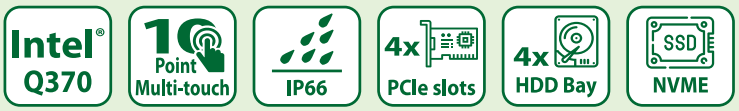

Specifications

Model		PPC-F17C-Q370	PPC-FW19C-Q370
TFT LCD	LCD Size	17”	18.5"
	Max. Resolution	1280x1024	1366x768
	Brightness (cd/m²)	350	400
	Contrast Ratio	1000:1	
	LCD Color	16.7M	
	Viewing Angle (H/V)	170°/160°	
	Backlight MTBF (Hrs)	50,000	
Touch Screen		PCAP touch with 10-point multitouch, anti-glare coating	
Mainboard	CPU	8th/9th Generation Intel® Core™ i7/i5/i3 and Pentium® processor in the LGA 1151 package	
	Chipset	Intel® Q370 Chipset	
	Memory	2 x 288-pin 2666/2400 MHz dual-channel DDR4 unbuffered DIMM slot supporting up to 64GB	
	Graphics Engine	Intel® HD Graphics Gen 9 Engines with 16 low-power execution units, supports DX2015, OpenGL 5.X and OpenCL 2 x, ES 2.0	
	Ethernet	Intel® I211 & I219 controller	
Storage		(1) 4 x Accessible 2.5” SATA 6Gb/s HDD/SSD bay (RAID 0/1/5/10 support) with LED indicator (2) 1 x M.2 2280 PCIe Gen 3.0 x4 NVMe™ SSD socket	
I/O Ports and Switches		1 x HDMI output 2 x GbE LAN 6 x USB 3.2 Gen 1 (5Gb/s) Type-A 2 x RS-232 DB-9 type 1 x Mic in	1 x Line out 1 x AC power in Inlet Power button with power LED (power on=Blue) AT/ATX mode switch Reset button
Expansion Slots		2 x PCIe 3.0 by 8 (by 16 slot) 2 x PCIe 3.0 by 4 (maximum card size supported: 68 mm x 167 mm) 1 x NGFF M.2 (2230) A Key socket (support Wi-Fi) 1 x NGFF M.2 (3042) B Key socket (support WWAN wits SIM slot)	
Thermal Solution		Smart Fan	
Power Supply		AC input ATX power supply 1. 250W power supply - Input: 115VAC~230VAC, 50/60Hz - Output (max.): 3.3V@12A, 5V@14A, 12V@25A, -12V@0.3A,+5Vsb@3A 2. 350W power supply (Build to Order) - Input: 115VAC~264VAC, 50/60Hz - Output (max.): 3.3V@14A, 5V@16A, 12V@29A, -12V@0.3A,+5Vsb@3A -Efficiency: Full load (100%) 87%, Typical load (50%) 90%, Light load (20%) 87%	
Watchdog Timer		Software Programmable support 1~255 sec. system reset	
Construction	IP Rating	IP66-rated front panel	
	Chassis Construction	Metal Housing	
	Mounting	Rack/Panel Mount	
	Color	Front Bezel : Cyan-blue (PSM 296C), Others: Black C	
	Cut-out dimensions (LxDxH) (mm)	391 x 324	447.8 x 267.2
	Dimensions (LxDxH) (mm)	408.4 x 341.4 x 119	469.8 x 289.2 x 120.8
Environmental	Operating Temperature	-20°C ~ 50°C (with SSD and up to TDP 65W processor) -20°C ~ 40°C (with HDD or add-on cards without fan)	
	Storage Temperature	-30°C ~ 60°C	
	Operating Humidity	5% ~95%, non-condensing	
	Vibration	5~17Hz, 0.1 double amplitude displacement 17~640Hz 1.5G acceleration peak to peak	
	Shock	10G acceleration part to part (11ms)	
	Safety and EMC	CE & FCC Class A certified	

Ordering Information

	Part No.	Description
15”	PPC-F15C-Q370-P/PC/25-R20	15" 450cd/m² 1024 x768 AI modular Panel PC , Intel® Pentium® Gold G5400T Processor (2-core, 4-thread, 3.10 GHz) TDP 35W, two PCIe x4 and two PCIe x8 slots, four HDD bays, 250W PSU, R20
	PPC-F15C-Q370-i3/PC/25-R20	15" 450cd/m² 1024 x768 AI modular Panel PC, Intel® Core™ i3-8100T Processor (4-core, 4-thread, 3.10 GHz) TDP 35W, two PCIe x4 and two PCIe x8 slots, four HDD bays, 250W PSU, R20
	PPC-F15C-Q370-i5/PC/25-R20*	15" 450cd/m² 1024 x768 AI modular Panel PC, Intel® Core™ i5-8500T Processor (6-core, 6-thread, 2.1 GHz) TDP 35W, two PCIe x4 and two PCIe x8 slots, four HDD bays, 250W PSU, R20
	PPC-F15C-Q370-i7/PC/25-R20*	15" 450cd/m² 1024 x768 AI modular Panel PC, Intel® Core™ i7-8700T Processor (6-core,12-thread,2.4 GHz) TDP 35W, two PCIe x4 and two PCIe x8 slots, four HDD bays, 250W PSU, R20
15.6”	PPC-FW15C-Q370-P/PC/25-R20	15.6" 400cd/m² 1366 x 768 AI modular Panel PC, Intel® Pentium® Gold G5400T Processor (2-core, 4-thread, 3.10 GHz) TDP 35W, two PCIe x4 and two PCIe x8 slots, four HDD bays, 250W PSU, R20
	PPC-FW15C-Q370-i3/PC/25-R20	15.6" 400cd/m² 1366 x 768 AI modular Panel PC, Intel® Core™ i3-8100T Processor (4-core, 4-thread, 3.10 GHz) TDP 35W, two PCIe x4 and two PCIe x8 slots, four HDD bays, 250W PSU, R20
	PPC-FW15C-Q370-i5/PC/25-R20*	15.6" 400cd/m² 1366 x 768 AI modular Panel PC, Intel® Core™ i5-8500T Processor (6-core, 6-thread, 2.1 GHz) TDP 35W, two PCIe x4 and two PCIe x8 slots, four HDD bays, 250W PSU, R20
	PPC-FW15C-Q370-i7/PC/25-R20*	15.6" 400cd/m² 1366 x 768 AI modular Panel PC, Intel® Core™ i7-8700T Processor (6-core,12-thread,2.4 GHz) TDP 35W, two PCIe x4 and two PCIe x8 slots, four HDD bays, 250W PSU, R20
17”	PPC-F17C-Q370-P/PC/25-R20	17" 350cd/m² 1280 x 1024 AI modular Panel PC, Intel® Pentium® Gold G5400T Processor (2-core, 4-thread, 3.10 GHz) TDP 35W, two PCIe x4 and two PCIe x8 slots, four HDD bays, 250W PSU, R20
	PPC-F17C-Q370-i3/PC/25-R20	17" 350cd/m² 1280 x 1024 AI modular Panel PC, Intel® Core™ i3-8100T Processor (4-core, 4-thread, 3.10 GHz) TDP 35W, two PCIe x4 and two PCIe x8 slots, four HDD bays, 250W PSU, R20
	PPC-F17C-Q370-i5/PC/25-R20*	17" 350cd/m² 1280 x 1024 AI modular Panel PC, Intel® Core™ i5-8500T Processor (6-core, 6-thread, 2.1 GHz) TDP 35W, two PCIe x4 and two PCIe x8 slots, four HDD bays, 250W PSU, R20
	PPC-F17C-Q370-i7/PC/25-R20*	17" 350cd/m² 1280 x 1024 AI modular Panel PC, Intel® Core™ i7-8700T Processor (6-core,12-thread,2.4 GHz) TDP 35W, two PCIe x4 and two PCIe x8 slots, four HDD bays, 250W PSU, R20
18.5”	PPC-FW19C-Q370-P/PC/25-R20	18.5" 400cd/m² 1366 x 768 AI modular Panel PC, Intel® Pentium® Gold G5400T Processor (2-core, 4-thread, 3.10 GHz) TDP 35W, two PCIe x4 and two PCIe x8 slots, four HDD bays, 250W PSU, R20
	PPC-FW19C-Q370-i3/PC/25-R20	18.5" 400cd/m² 1366 x 768 AI modular Panel PC, Intel® Core™ i3-8100T Processor (4-core, 4-thread, 3.10 GHz) TDP 35W, two PCIe x4 and two PCIe x8 slots, four HDD bays, 250W PSU, R20
	PPC-FW19C-Q370-i5/PC/25-R20*	18.5" 400cd/m² 1366 x 768 AI modular Panel PC, Intel® Core™ i5-8500T Processor (6-core, 6-thread, 2.1 GHz) TDP 35W, two PCIe x4 and two PCIe x8 slots, four HDD bays, 250W PSU, R20
	PPC-FW19C-Q370-i7/PC/25-R20*	18.5" 400cd/m² 1366 x 768 AI modular Panel PC, Intel® Core™ i7-8700T Processor (6-core,12-thread,2.4 GHz) TDP 35W, two PCIe x4 and two PCIe x8 slots, four HDD bays, 250W PSU, R20

*Build to order
**350W AC PSU models are by build-to-order manufacturing

Options

Item	PPC-F15C	PPC-FW15C	PPC-F17C	PPC-FW19C
Panel Mount Kit	FPK-12-R10	FPK-14-R10	FPK-13-R10	FPK-13-R10
Rack Mount Kit	FRK15C-R10	FRKW15C-R10	FRK17C-R10	FRKW19C-R10

Packing List

Item	Q'ty	Description
44013-030041-RS	16	Flat head screws for HDD bracket, M3*4
32702-000200-100-RS	1	European power cord, 1830mm

Fully Integrated I/O

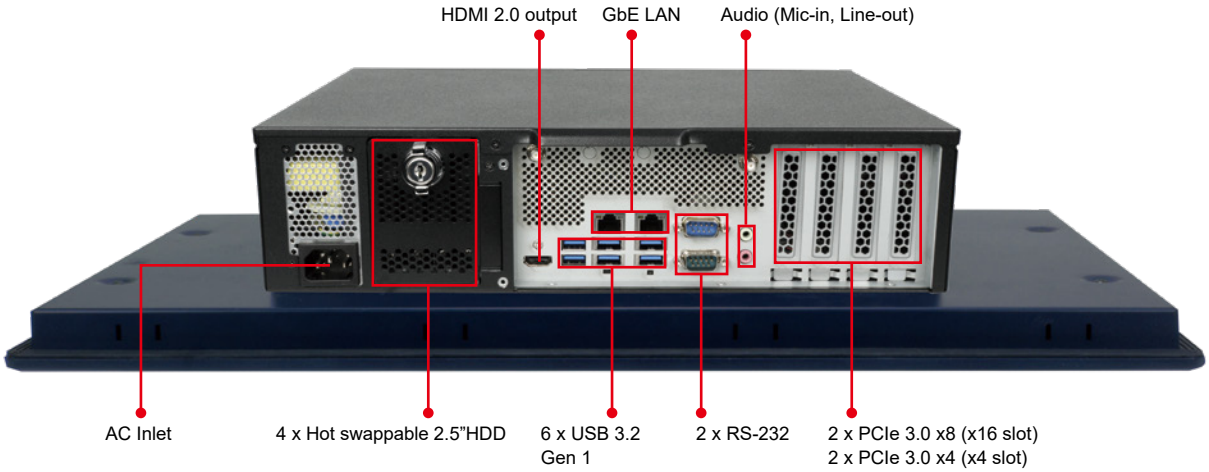

PPC-F15C-Q370 Dimensions

(Unit: mm)

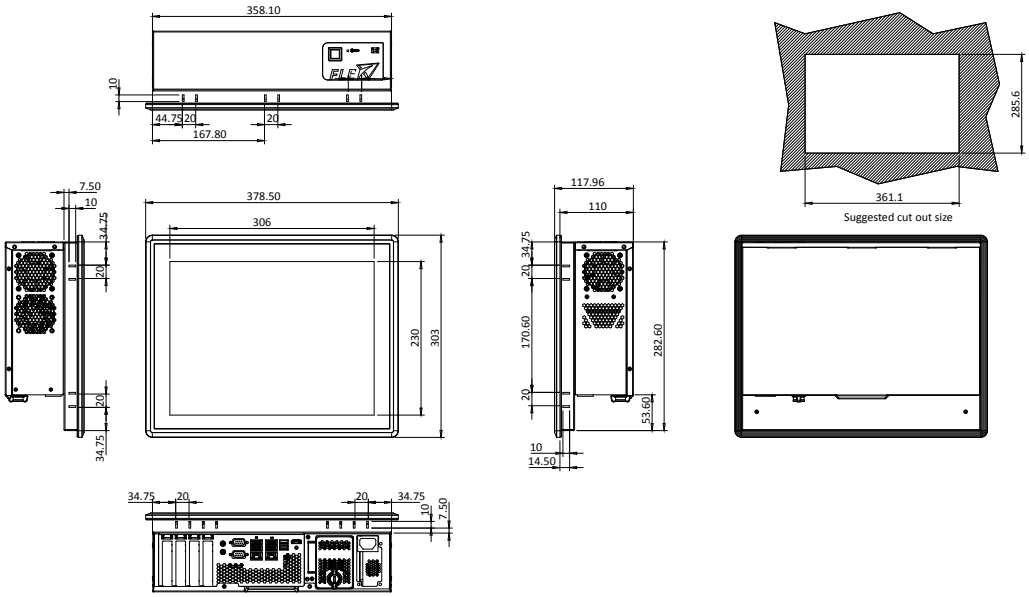

PPC-FW15C-Q370 Dimensions

(Unit: mm)

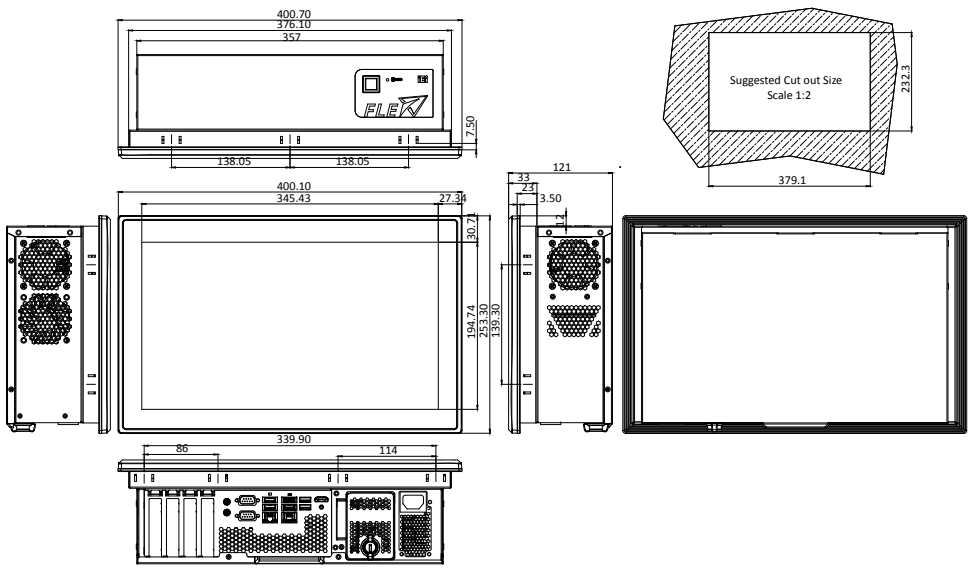

PPC-F17C-Q370 Dimensions

(Unit: mm)

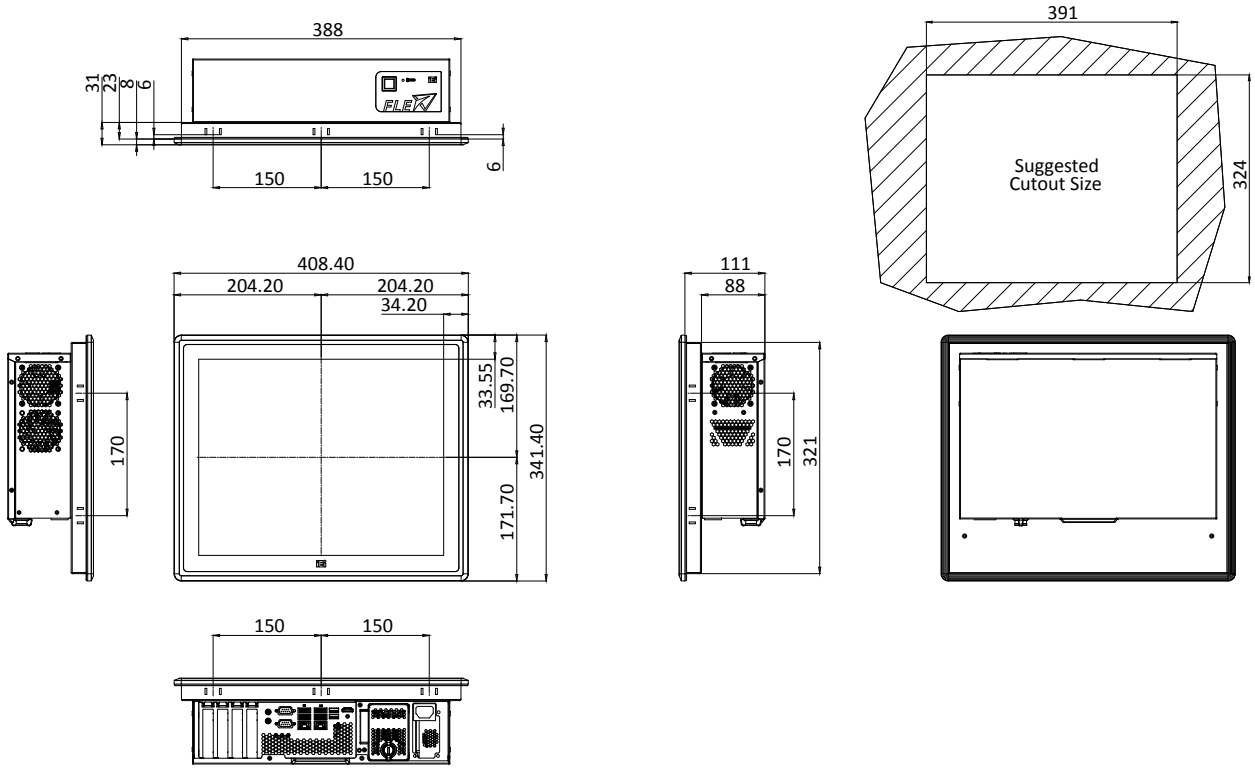

PPC-FW19C-Q370 Dimensions

(Unit: mm)

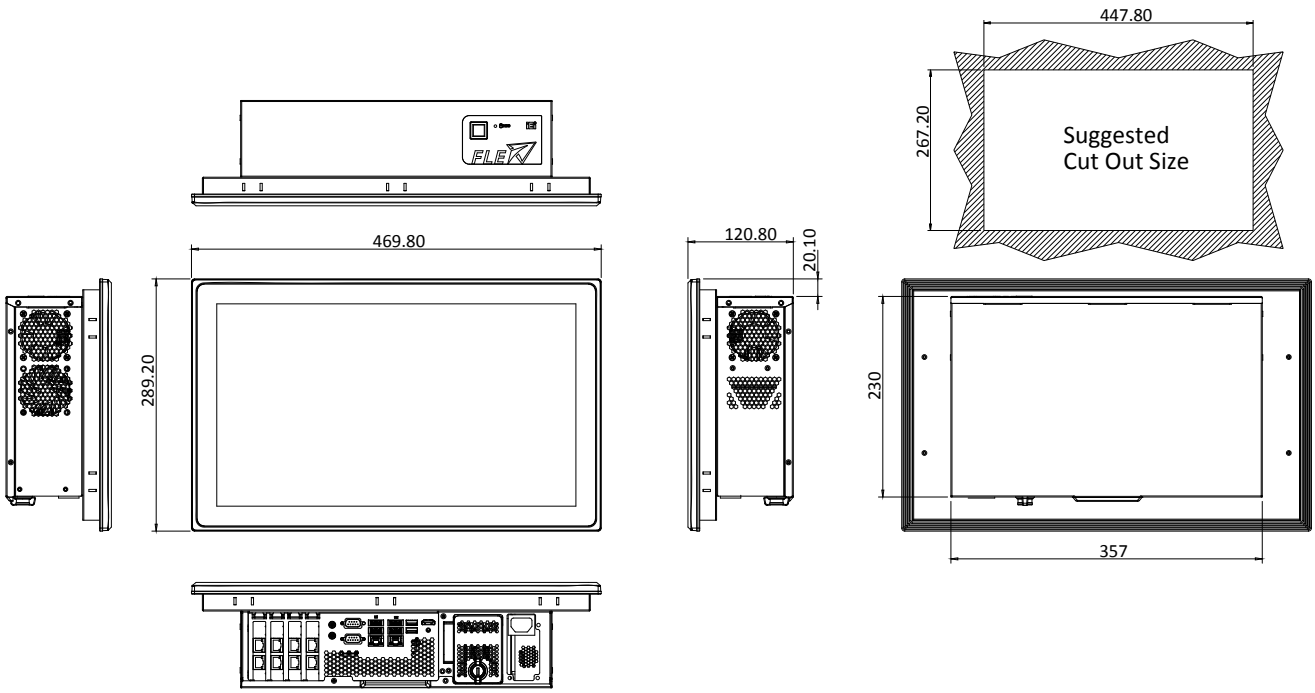

PPC-F Series

IEI is dedicated to developing impeccable industrial panel PC products.The PPC and PPC-F series industrial panel PCs not only keep rugged design of IP65 protection but also enrich aesthetic experience by implementing the seamless mounting method. The projected capacitive touch option is added to these new series of products to provide up to 2 points multi-touch solution! Additionally, we also provide high performance H81 series and low power consumption Bay Trail series to meet customers' requests.

■ PPC-F Industrial Panel PC Series

The PPC-F series aims at slim and compact design. Therefore, this new series makes a huge improvement in mechanical design to achieve the goal.



PPC-F15A-H81
262.2 x 322.2 mm

PPC-5150A-H61
309 x 410 mm



■ 8mm Ultra Thin Bezel Design

To enhance aesthetic experience in industrial automation applications, the depth of the front bezel of the PPC-F is only 8mm to minimize the gap between the wall and the system in wall/panel mounting, which is neat and simple during integration.



■ 10-Point Multi Touch

The PPC series supports 10-point projected capacitive touch, enhancing smooth operations! IEI also provides 12" to 24" resistive single type and projected capacitive type touchscreen options to enrich simple and intuitive user experience.



■ Impeccable Front Panel

6H Anti-scratch Touch

The PPC-F series equipped with projected capacitive touchscreen uses 6H hardness vandal proof strengthened glass to prevent damages from physical impact.



Front Bezel IP65 Protection

Designed for harsh environments, the PPC-F series provides front bezel IP65 protection to resist dust and water jet.



■ IEI Remote Intelligent Management System

The PPC-F supports iEi iRIS remote management, which helps users to manage multiple devices through single management interface and elevates work efficiency. iRIS solution only requires a module and Internet connection! (For PPC-F H81 & PPC-F 12B/15B/17B only)

IPMI 2.0 Compliant



Remote Power Management

Users can remotely power on/off all the iRIS devices and set up power cycle to simplify power control process.

ON OFF

Unify industrial automation process through a simple setting!



24H Active Recovery

With remote troubleshooting everywhere, there is no need to send out maintenance staff anymore!



■ Built-in 80-Plus Silver Power Supply

The 80-plus silver power supply is implemented into the PPC-F H81 series, which reduces power loss and increases efficiency during power transition. With the certified power supply, the power transition between AC source and DC source couldmaintain up to 85% efficiency, and the power loss is only 15% or less. For customers, the high efficiency of power transition could reduce not only cost but also heat loss.. Furthermore, it could make a friendly environment. (For PPC-F H81 series only)

Parameters	Loading	Gold	Silver	Bronze	80 Plus
Efficiency	20%	87%	85%	82%	80%
	50%	90%	88%	85%	80%
	100%	87%	85%	82%	80%
Power Factor	50%	90% (across the full range)			90% (@100% Load)



■ PCIe Mini Card Expansion

Two full-size PCIe Mini card expansion slots are reserved in the PPC-F series (Depends on models). With a wide variety of IEI PCIe Mini card solutions, it is flexible and easy to add extra functions in the system.

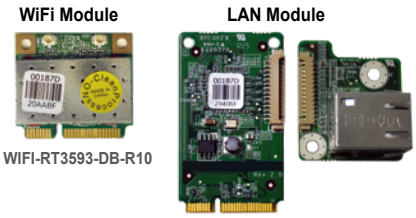



PPC-F Series Selection Guide






LCD Size		5.7”	8”	10.4”	12”
Model		PPC-F06B-BT	PPC-F08B-BT	PPC-F10B-BT	PPC-F12B-BT
Display	LCD Size	5.7” (4:3)	8” (4:3)	10.4”	12” (4:3)
	Max. Resolution	640 (W) x 480 (H)	800 (W) x 600 (H)	800 (W) x 600 (H)	1024 (W) x 768 (H)
	Brightness (cd/m²)	550	500	400	600
	Contrast Ratio	800 : 1	500 : 1	700 : 1	700 : 1
	LCD Color	262K	16.2M	16.2M	16.2M
	Pixel Pitch (mm) (HxV)	0.18 x 0.18	0.2025 x 0.0675	0.264 x 0.264	0.24 x 0.24
	Viewing Angle (V/H)	160° / 140°	140° / 120°	160° / 140°	160° / 140°
	Backlight MTBF (hrs)	50000	50000	30000	50000
Touch	TouchScreen	4-wire resistive type flat touch window, 3H	5-wire resistive type flat touchscreen, 3H	5-wire resistive type flat touchscreen, 3H	5-wire resistive single touch window, 3H (Anti-glare Surface) 10-point Projected capacitive touch window, 6H (Anti-UV, Anti-glare Surface)
	Touch Controller	PenMount DMC9000	PenMount DMC9000	PenMount DMC9000	Penmount DMC 9000 EETI EXC3188
Motherboard	CPU	Intel® Celeron® processor N2807,dual-core, 1.58GHz	Intel® Celeron® J1900 on-board SoC, quad-core, 2GHz	Intel® Celeron® J1900 on-board SoC, quad-core, 2GHz	Intel® Celeron® quad-core J1900 SoC, 2GHz
	Chipset	N/A	N/A	N/A	N/A
	RAM	2GB DDR3L 1600MHz on-board RAM (system max. 4GB by MOQ=300pcs)	1 x 204-pin DDR3L SO-DIMM slot (max. 8GB)	1 x 204-pin DDR3L SO-DIMM slot (max. 8GB)	2 x 204-pin 1066/1333 MHz DDR3L SO-DIMM supported (max. 8GB)
	Ethernet	2 x RTL 8111HN	2 x RTL 8111HN	2 x RTL 8111HN	1 x PCIe GbE by Intel® I210 controller 1 x PCIe GbE by Intel® I211 controller
	Audio Codec	Realtek ALC662 HD codec	Realtek ALC892 HD codec	Realtek ALC892 HD codec	Realtek ALC662 HD codec
I/O Ports and Switches		1 x RJ-45 LAN port 1 x RS-232 COM port (DB-9 connector) (RI/5V/12V) 1 x RS-422/485 2 x USB 3.2 Gen 1 (5Gb/s) 2 x USB 2.0 1 x 9 V~36 V DC lockable jack (2-pin) 1 x Audio port (line-out) 1 x Power switch 1 x Reset button 1 x AT/ATX switch	1 x RS-232 COM port (RJ-45 connector) 1 x RS-232/422/485 COM port (DB-9 connector) (RI/5V/12V) 2 x USB 3.2 Gen 1 (5Gb/s) 2 x GbE LAN 1 x Power switch 1 x Reset button 1 x AT/ATX switch 1 x Audio port (line-out) 1 x 9 V~30 V lockable power jack	1 x RS-232 COM port (RJ-45 connector) 1 x RS-232/422/485 COM port (DB-9 connector) (RI/5V/12V) 2 x USB 2.0 2 x USB 3.2 Gen 1 (5Gb/s) 2 x GbE LAN 1 x Power switch 1 x Reset button 1 x AT/ATX switch 1 x Audio port (line-out) 1 x 9 V~30 V lockable power jack	2 x RJ-45 LAN port 2 x USB 3.2 Gen 1 (5Gb/s) 2 x USB 2.0 1 x HDMI 2 x RS-232 1 x RS-232/422/485 1 x VGA 1 x 9 V~36 V DC jack (4-pin) 1 x 9 V~36 V DC terminal block 1 x Power switch
Drive Bay	HDD Driver Bay	N/A	N/A	1 x 2.5” HDD bay	1 x 2.5” HDD bay
	SSD	mSATA			
Expansion Slot		1 Full Size PCIe Mini Slot (with mSATA, PCIe/USB Signal)	1 x Full-size PCIe Mini slot (with mSATA/PCIe/USB signal) 1 x Half-size PCIe Mini slot for Wi-Fi modules		1 x Full-size PCIe Mini card slot 1 x Full-size PCIe Mini card slot colay mSATA
System Cooling		Fanless	Fanless	Fanless	Fanless
Environment	Operating Temperature	-10°C~50°C (14°F~122°F)			
	Storage Temperature	-20°C~60°C (-4°F~140°F)			

PPC-F Series Selection Guide



LCD Size		15”		17”		19”
Model		PPC-F15A-H81	PPC-F15B-BT	PPC-F17A-H81	PPC-F17B-BT	PPC-F19B-BT
Display	LCD Size	15” (4:3)	15” (4:3)	17”	17”	19”
	Max. Resolution	1024 (W) x 768 (H)		1280 (W) x 1024 (H)		
	Brightness (cd/m²)	450		350		
	Contrast Ratio	800 : 1		1000 : 1		
	LCD Color	16.2M		16.7M		
	Pixel Pitch (mm) (HxV)	0.297 x 0.297		0.26 x 0.26	0.26 x 0.26	0.294 x 0.294
	Viewing Angle (V/H)	160° / 150°		170° / 160°	170° / 160°	170° / 160°
	Backlight MTBF (hrs)	70000		50000		
Touch	Touchscreen	5-wire resistive single touch window, 3H (Anti-glare Surface) 10-point Projected capacitive touch window, 6H (Anti-UV, Anti-glare Surface)				
	Touch Controller	Penmount DMC 9000 EETI EXC3188				
Motherboard	CPU	4th generation Intel® Core™ i7/ i5, Pentium® and Celeron® processor, up to TDP 65W CPU	Intel® Celeron® quad-core J1900 SoC, 2GHz	4th generation Intel® Core™ i7/ i5, Pentium® and Celeron® processor, up to TDP 65W CPU	Intel® Celeron® quad-core J1900 SoC, 2GHz	Intel® Celeron® processor J1900 (2M cache, up to 2.42 GHz)
	Chipset	N/A	Intel® H81	Intel® H81	N/A	N/A
	RAM	2 x 204-pin DDR3 SO-DIMM slots (max. 16GB)	2 x 204-pin 1066/1333 MHz DDR3L SO-DIMM supported (max. 8GB)	2 x 204-pin DDR3 SO-DIMM slots (max. 16GB)	2 x 204-pin 1066/1333 DDR3L SO-DIMM supported (max. 8GB)	2 x 204-pin DDR3L SO-DIMM slot (max. 8GB), pre-installed with 2GB
	Ethernet	1 x PCIe GbE by Intel® I210 controller 1 x PCIe GbE by Intel® I211 controller				
	Audio Codec	Realtek ALC662 HD codec				
I/O Ports and Switches		2 x RJ-45 LAN Port 2 x USB 3.2 Gen 1 (5Gb/s) 4 x USB 2.0 1 x HDMI output 4 x RS-232 1 x RS-422/485 1 x MIC-in 1 x Line-out 1 x VGA output 1 x AC/DC power plug (DC model is by build to order manufacturing) 1 x AT/ATX switch 1 x Clear CMOS 1 x Reset button 1 x Power switch	2 x RJ-45 LAN port 2 x USB 3.2 Gen 1 (5Gb/s) 2 x USB 2.0 1 x HDMI 2 x RS-232 1 x RS-232/422/485 1 x VGA 1 x 9 V~36 V DC jack (4-pin) 1 x 9 V~36 V DC terminal block 1 x Line-out 1 x Power switch	2 x RJ-45 ：LAN Port 2 x USB 3.2 Gen 1 (5Gb/s) 4 x USB 2.0 1 x HDMI output 4 x RS-232 1 x RS-422/485 1 x MIC-in 1 x Line-out 1 x VGA output 1 x AC/DC power plug (DC model is by build to order manufacturing) 1 x AT/ATX switch 1 x Clear CMOS 1 x Reset button 1 x Power switch	2 x RJ-45 LAN port 2 x USB 3.2 Gen 1 (5Gb/s) 2 x USB 2.0 1 x HDMI 2 x RS-232 1 x RS-232/422/485 1 x VGA 1 x DC jack (4-pin) 1 x Terminal block 1 x Microphone & speaker 1 x power switch	2 x RJ-45 LAN port 2 x USB 3.2 Gen 1 (5Gb/s) 2 x USB 2.0 1 x HDMI 2 x RS-232 1 x RS-232/422/485 1 x VGA 1 x 9 V~36 V DC jack (4-pin) 1 x 9 V~36 V DC terminal block 1 x Line-out (PPC-F15B & PPC-F17B & PPC-F19B only) 1 x Power switch
Drive Bay	HDD Driver Bay	1 x 2.5” HDD bay		1 x 2.5” SATA HDD bay with anti-shook		
	SSD	mSATA				
Expansion Slot		1 x Full-size PCIe Mini card 1 x Full-size PCIe Mini card co-lay mSATA				
System Cooling		Active fan	Fanless	Active fan	Fanless	Fanless
Environment	Operating Temperature	-10°C~50°C (14°F~122°F)				
	Storage Temperature	-20°C~60°C (-4°F~140°F)				

PPC-F H81 Series

Intelligent Industrial Panel PC



Features

- Support IEI iRIS-2400 IEI remote intelligent solution
- Scalable Intel® H81 chipset supports LGA1150 Intel® 4th generation Core™ i7/i5, Pentium® or Celeron® processor with up to 65W TDP
- Robust IP65 aluminum front bezel
- Aesthetic ultra-thin bezel for seamless panel mount installation
- Projected capacitive multi-touch
- Dual full-size PCIe Mini card expansion

IPMI 2.0 Compliant | FHD | Multi-touch | IP65 | PCIe Mini | USB 3.2 | MOUNT

Specifications

Model		PPC-F15A	PPC-F17A
LCD	LCD Display	15" (4:3)	17" (5:4)
	Max. Resolution	1024 (W) x 768 (H)	1280 (W) x 1024 (H)
	Brightness (cd/m²)	450	350
	Contrast Ratio	800 : 1	800 : 1
	LCD Color	16.2M	16.7M
	Pixel Pitch (mm)	0.297 x 0.297	0.26 x 0.26
	Viewing Angle (H-V)	160° / 150°	170° / 160°
	Backlight MTBF (hrs)	70000	50000
Motherboard	SBC Model	FPPCMB-H81-R10	
	CPU	LGA1150 Intel® 4th generation Core™ i7/i5, Pentium® or Celeron® processor with up to 65W TDP	
	Chipset	Intel® H81	
	RAM	Support 2 x 204-pin 1066/1333/1600 MHz dual-channel DDR3 SO-DIMM slots (max. 16GB)	
Touch	Touchscreen & Controller	5-wire resistive single touch window, 3H/Penmount 9000 (Anti-glare Surface) 10-point Projected capacitive touch window, 6H/EETI EXC3188 (Anti-UV, Anti-glare Surface)	
Input Interfaces	I/O Ports & Switch	2 x RJ-45 LAN Port 2 x USB 3.2 Gen 1 (5Gb/s) 4 x USB 2.0 1 x HDMI output 4 x RS-232 1 x RS-422/485 1 x MIC-in 1 x Line-out	
	Expansion	1 x Full-size/half-size PCIe Mini card (PCIe and USB signal) 1 x Full-size/half-size PCIe Mini card (PCIe , USB and mSATA signal)	
Wireless LAN		802.11 b/g/n (optional)	
Storage		1 x 2.5" HDD/SSD drive bay 1 x mSATA	
iRIS Remote Management Solution		iRIS-2400 (optional)	
Physical	Construction Material	Aluminum front cover and sheet metal rear cover	
	Mounting	Panel mount, rack mount, 100x100 VESA mount	
	Enclosure Color	Black C	
	Dimensions (mm)	303 x 378.5 x 68.7	341.4 x 408.4 x 73.8
	Cutout Dimensions (mm)	285.6 x 361.1	323 x 390
	Net/ Gross Weight (kg)	5.6/ 8.3	7.5/10.7
Environment	Operating Temperature (with air flow)	-10°C ~ 50°C	
	Storage Temperature	-20°C ~ 60°C	
	Humidity	10% to 95% (non-condensing)	
	IP Level	Front IP 65	
	Safety and EMC	CE & FCC certified	
Power Supply	AC Input	AC input ATX power supply - P/N: 63030-010220-100-RS - 220W power supply - Input: 90VAC-264VAC, 50/60Hz - Output (max.): 3.3V@10A, 5V@14A, 12V@14A, -12V@0.3A	
Power Consumption		80W	100W

Ordering Information

Part No.		Description
15”	PPC-F15AA-H81i-P/4G/PC-R23	15" 450 cd/m² XGA Panel PC with Intel® H81 chipset, Intel® Pentium® Processor G3420 (3M Cache, 3.20 GHz), TDP 53W, 2GB RAM*2, support iRIS-2400, black color, PSU ACE-A622C, projective capacitive touch window with AG coating, R23
	PPC-F15AA-H81i-i5/4G/PC-R23	15" 450 cd/m² XGA Panel PC with Intel® H81 chipset, Core i5 Quad Core i5-4570S Processor (6M Cache, up to 3.60GHz), TDP 65W, 2GB RAM*2, support iRIS-2400, black color, PSU ACE-A622C, PCAP touch window with AG coating, R23
	PPC-F15AA-H81i-P/4G/R-R23	15" 450 cd/m² XGA Panel PC with Intel® H81 chipset, Intel® Pentium® Processor G3420 (3M Cache, 3.20 GHz), TDP 53W, 2GB RAM*2, support iRIS-2400, black color, PSU ACE-A622C, resistive touch window with AG coating, R23
	PPC-F15AA-H81i-i5/4G/R-R23	15" 450 cd/m² XGA Panel PC with Intel® H81 chipset, Core i5 Quad Core i5-4570S Processor (6M Cache, up to 3.60GHz), TDP 65W, 2GB RAM*2, support iRIS-2400, black color, PSU ACE-A622C, resistive touch window with AG coating, R23
17”	PPC-F17AA-H81i-P/4G/PC-R14	17" 350 cd/m² SXGA Panel PC with Intel® H81 chipset, Intel® Pentium® Processor G3420 (3M Cache, 3.20 GHz), TDP 53W, 2GB RAM*2, support iRIS-2400, black color, PSU ACE-A622C, projective capacitive touch window with AG coating, R14
	PPC-F17AA-H81i-i5/4G/PC-R14	17" 350 cd/m² SXGA Panel PC with Intel® H81 chipset,Core i5 Quad Core i5-4570S Processor(6M Cache,up to 3.60GHz),TDP 65W,2GB RAM*2,support iRIS-2400,black color, PSU ACE-622C ,projective capacitive touch window with AG coating, R14
	PPC-F17AA-H81i-P/4G/R-R14	17" 350 cd/m² SXGA Panel PC with Intel® H81 chipset, Intel® Pentium® Processor G3420 (3M Cache, 3.20 GHz), TDP 53W, 2GB RAM*2, support iRIS-2400, black color, PSU ACE-A622C, resistive touch window with AG coating, R14
	PPC-F17AA-H81i-i5/4G/R-R14	17" 350 cd/m² SXGA Panel PC with Intel® H811 chipset, Core i5 Quad Core i5-4570S Processor (6M Cache, up to 3.60 GHz), TDP 65W, 2GB RAM*2, support iRIS-2400, black color, PSU ACE-622C, resistive touch window with AG coating, R14

Options

Item	PPC-F15A	PPC-F17A
Arm	ARM-31-RS	ARM-31-RS
Stand	STAND-A21 STAND-A19-RS STAND-C19-R10	STAND-C19-R10 STAND-A21-R10
Wall Mount Kit	WK-190MS-R10	
Panel Mount Kit	FPK-04-R10	
Rack Mount Kit	FRK15-R10	FRK17-R10
iRIS (IEI Remote Intelligent System) Kit	iRIS-2400-R10	

Packing List

Item	Q’ty	Remark
Power Cord	1	Depends on shipping region
Screw Kit	1	

PPC-F15A
Fully Integrated I/O

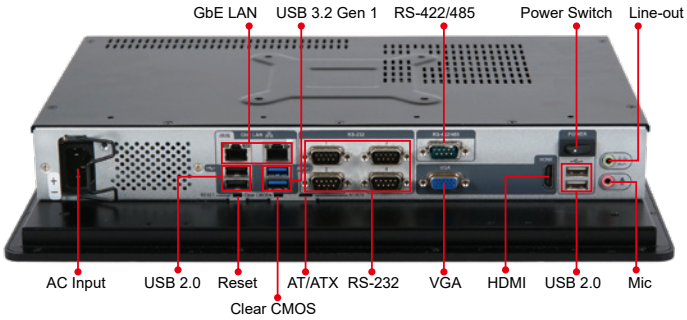

PPC-F17A
Fully Integrated I/O

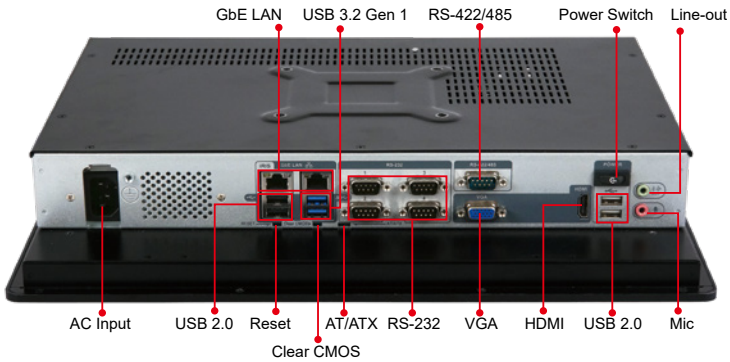

PPC-F15A Dimensions

(Unit: mm)

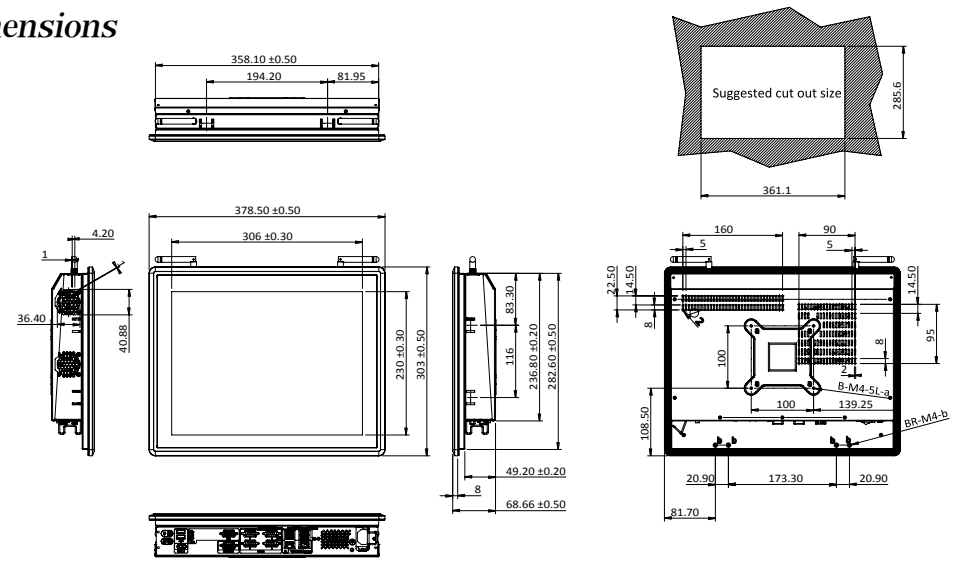

PPC-F17A Dimensions

(Unit: mm)

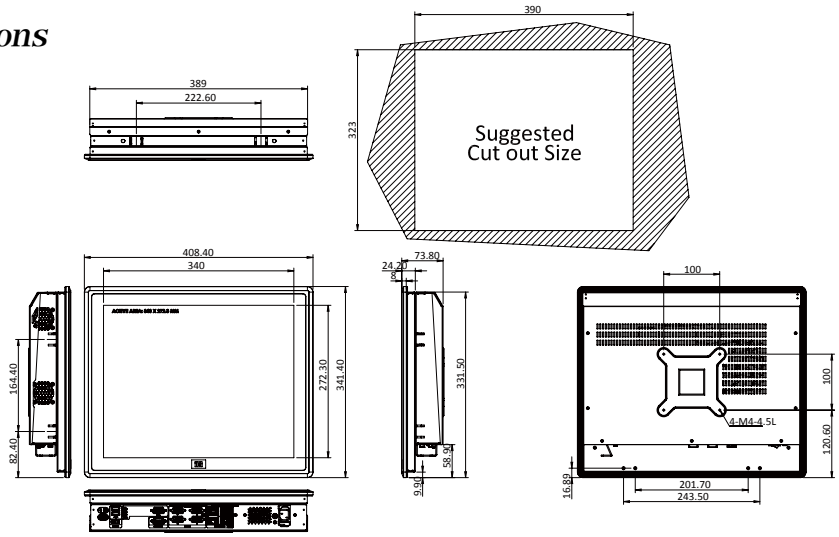

PPC-F Bay Trail Fanless Series

5.7”/8”/10.4” Fanless Intel® Bay Trail Solution

Features

- 5.7”, 8” and 10.4” fanless industrial panel PC
- 2.0 GHz Intel® Celeron® J1900 quad-core processor or 1.58 GHz Intel® Celeron® N2807 dual-core processor
- Low power consumption DDR3L memory supported
- IP 65 compliant front panel
- 9 V~30 V wide DC input
- mSATA SSD suppoted
- Dual GbE for backup
- -10°C~50°C extended operating temperature





Specifications

Model		PPC-F06B-BT	PPC-F08B-BT	PPC-F10B-BT
LCD	LCD Display	5.7” (4:3)	8” (4:3)	10.4”
	Max. Resolution	640 (W) x 480 (H)	800 (W) x 600 (H)	800 (W) x 600 (H)
	Brightness (cd/m²)	550	500	400
	Contrast Ratio	800:1	500:1	700:1
	LCD Color	262K	16.2M	16.2M
	Pixel Pitch (mm)	0.18 (H) x 0.18 (V)	0.2025 (H) x 0.0675 (V)	0.264 (H) x 0.264 (V)
	Viewing Angle (H-V)	160° / 140°	140° / 120°	160° / 140°
	Backlight MTBF (hrs)	50000	50000	30000
Motherboard	CPU	Intel® Celeron® N2807 dual-core processor, 1.58GHz	Intel® Celeron® J1900 quad-core on-board SoC, 2GHz	
	RAM	2GB DDR3L 1600MHz on-board RAM (system max. 4GB, by MOQ=300pcs)	1 x 204-pin DDR3L SO-DIMM slots (max. 8GB)	
Touch	Touchscreen & Controller	4-wire resistive type flat touch window, PenMount DMC9000	5-wire resistive type flat touchscreen, PenMount DMC9000	
	Surface Hardness	3H	3H	3H
Input Interfaces	I/O Ports & Switches	2 x RJ-45 LAN port 1 x RS-232 COM port (DB-9 connector) (RI/5V/12V) 1 x RS-422/485 2 x USB 3.2 Gen 1 (5Gb/s) 2 x USB 2.0 1 x 9 V~30 V DC lockable DC jack (2-pin) 1 x Audio port (line-out) 1 x Power switch 1 x Reset button 1 x AT/ATX switch	1 x RS-232 COM port (RJ-45 connector) 1 x RS-232/422/485 COM port (DB-9 connector) (RI/5V/12V) 2 x USB 3.2 Gen 1 (5Gb/s) 2 x GbE LAN 1 x Power switch 1 x Reset button 1 x AT/ATX switch 1 x Audio port (line-out) 1 x 9 V~30 V lockable power jack	1 x RS-232 COM port (RJ-45 connector) 1 x RS-232/422/485 COM port (DB9 connector) (RI/5V/12V) 2 x USB 2.0 2 x USB 3.2 Gen 1 (5Gb/s) 2 x GbE LAN 1 x Power switch 1 x Reset button 1 x AT/ATX switch 1 x Audio port (line-out) 1 x 9 V~30 V lockable power jack
Expansion		1 x Full-size PCIe Mini slot (mSATA/PCIe/USB signal)	1 x Full-size/half-size PCIe Mini slot (mSATA/PCIe/USB signal) 1 x Half-size PCIe Mini slot (PCIe signal only)	
Wireless LAN		802.11 b/g/n (optional)		
Storage	SSD	mSATA	mSATA	mSATA
	HDD	N/A	N/A	1 x 2.5” HDD bay
Physical	Construction Material	Aluminum front bezel		
	Mounting	Stand, panel mount, rack mount, VESA 75x75	Stand, panel mount, rack mount, VESA 75x75	Stand, panel mount, rack mount, VESA 75x75/100x100
	Enclosure Color	Black C		
	Dimensions (mm)	136.4 x 178.5 x 56.3	182.2 x 222.2 x 44	232.4 x 285.2 x 44
	Net Weight	0.89 kg	1.17 kg	1.77 kg
	Cut-out Dimensions (mm)	157.5 x 115.4	207 x 154	267.2 x 214.4
Environment	Operating Temperature (with air flow)	-10°C~50°C (14°F~122°F)		
	Storage Temperature	-20°C~60°C (-4°F~140°F)		
	Humidity	10% to 95% (non-condensing)		
	IP Level	IP 65 compliant front panel		
	Safety and EMC	CE & FCC Class A certified		
Power	Power Adapter	P/N: 63040-010036-210-RS 36W Power Adapter Input: 90 - 264V AC, 50/60Hz Output: 12V DC		
	Power Requirement	9 ~ 30V DC		
	Power Consumption	24W	28W	34W

Ordering Information

Part No.	Description
PPC-F06B-BT-N1/2G/R-R11	5.7" 450 cd/m² VGA panel PC with Intel® Celeron® processor N2807, TDP 4.3W, 2GB on-board DDR3L RAM, black color, 9-30V DC input, resistive touch window, R11
PPC-F08B-BT-J1/2G/R-R11	8" 500 cd/m² SVGA panel PC with Intel® Celeron® processor J1900, TDP 10W, 2GB DDR3L RAM, black color, 9-30V DC input, resistive touch window, R11
PPC-F10B-BT-J1/2G/R-R11	10.4" 400 cd/m² SVGA panel PC with Intel® Celeron® processor J1900, TDP 10W, 2GB DDR3L RAM, black color, 9-30V DC input, resistive touch window, R11

Options

Item	PPC-F06B	PPC-F08B	PPC-F10B
Arm	ARM-11-RS	ARM-11-RS	ARM-11-RS
Stand	STAND-100-RS STAND-B08	STAND-100-RS STAND-B08 STAND-C12-R10	STAND-100-RS STAND-B08 STAND-C12-R10
Wall Mount Kit	AFLWK-12	AFLWK-12	AFLWK-12
Panel Mount Kit	FPK-07-R10	FPK-07-R10	FPK-09-R10
Wi-Fi Kit	EMB-WIFI-KIT01-R20		

Packing List

Item	Q'ty	Remark
PPC-FxxB-BTi Panel PC	1	
Power Cord	1	Part numbers vary by regions
Screw Pack	1	Including necessary screws
Power Adapter	1	9V~30V DC P/N: 63040-010036-210-RS

PPC-F06B
Fully Integrated I/O

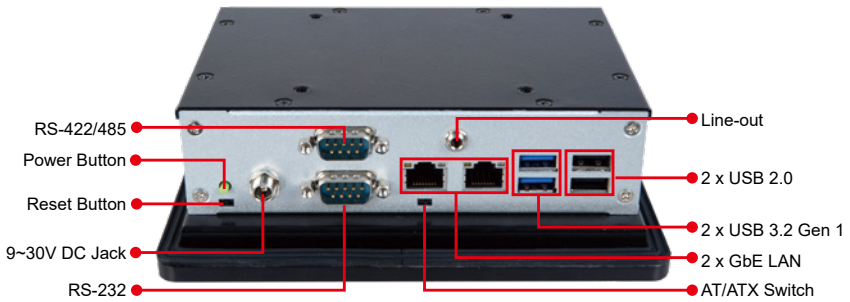

PPC-F08B
Fully Integrated I/O

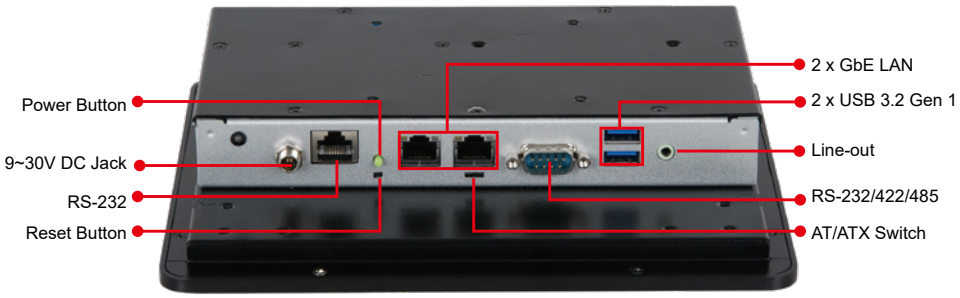

PPC-F10B
Fully Integrated I/O

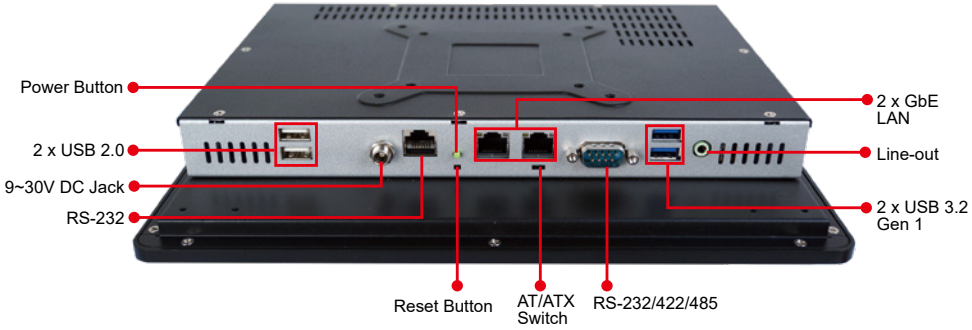

PPC-F06B-BT Dimensions (Unit: mm)

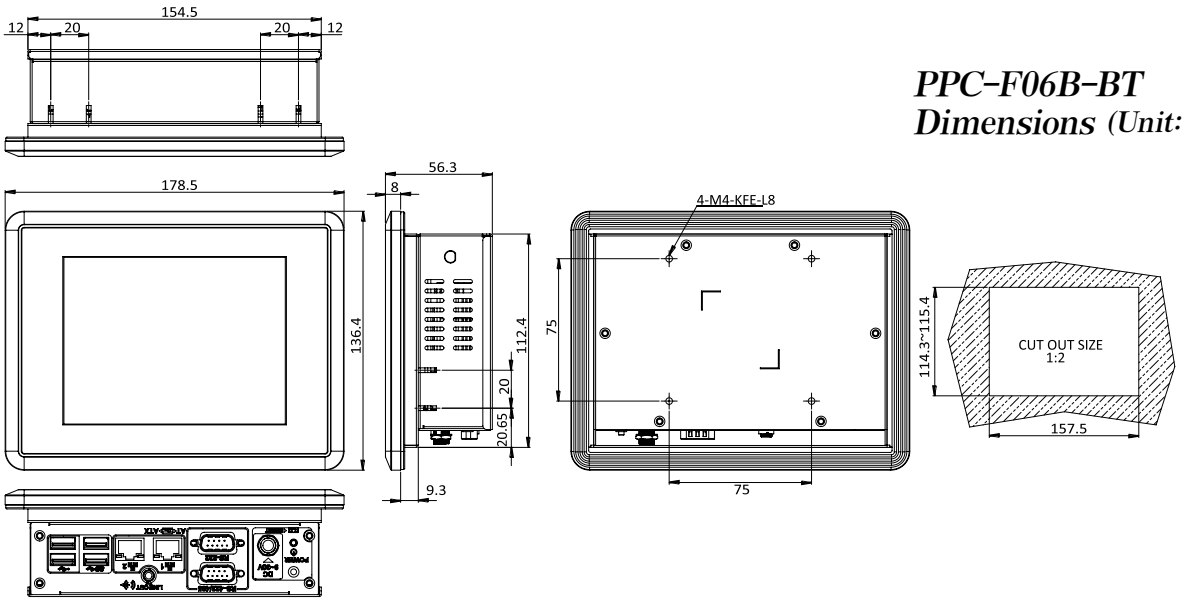

PPC-F08B-BT Dimensions (Unit: mm)

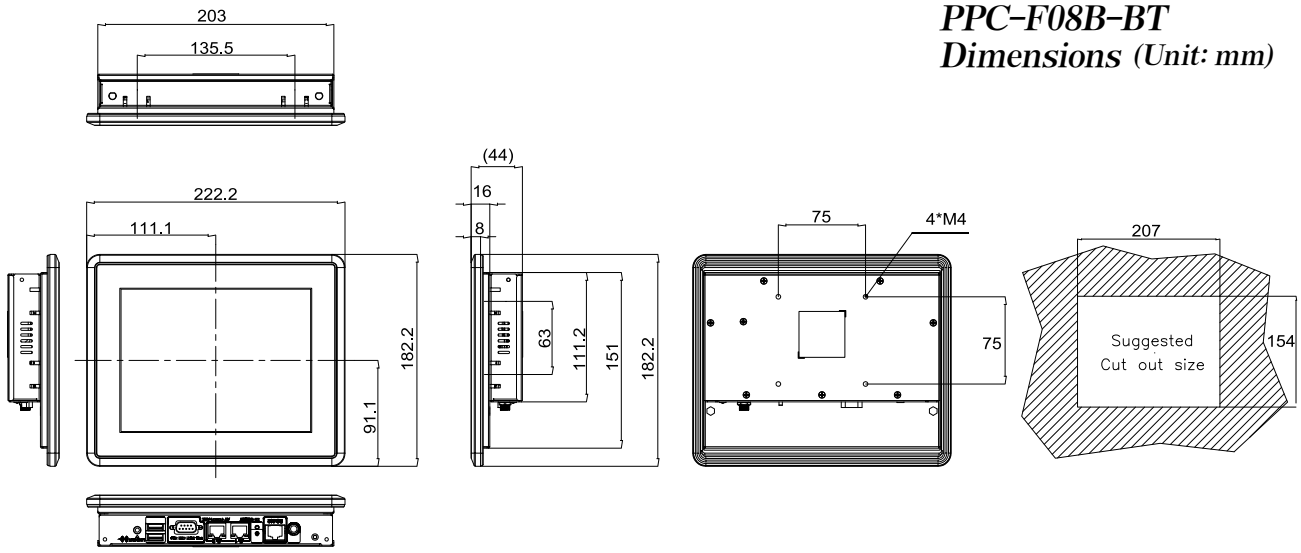

PPC-F10B-BT Dimensions (Unit: mm)

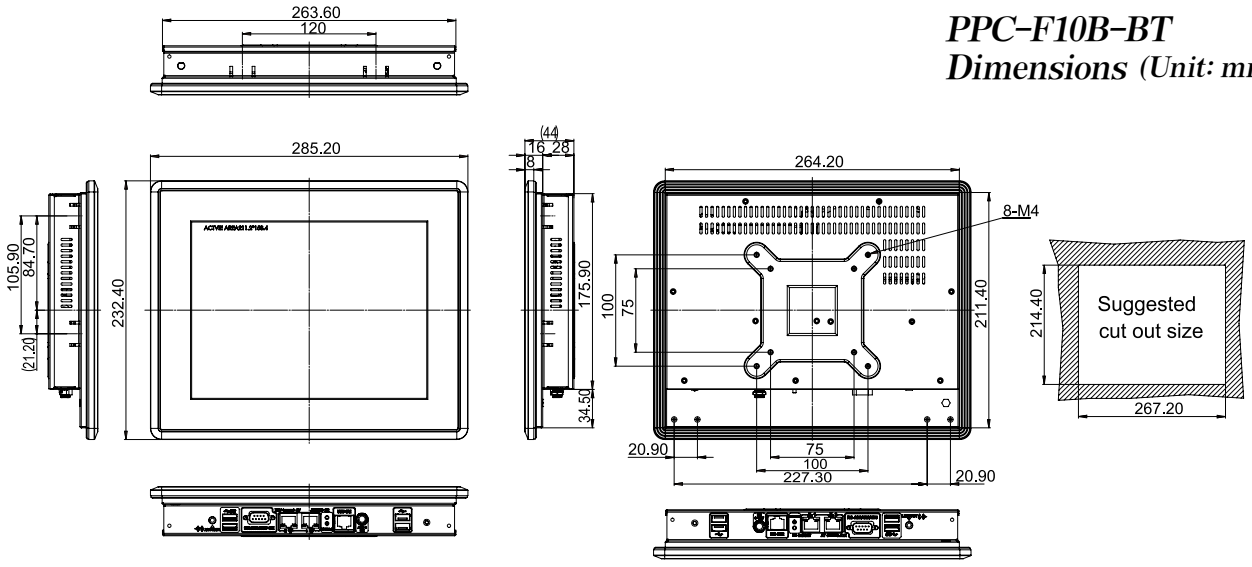

PPC-F Bay Trail Fanless Series

12”/15”/17”/19” Fanless Intel® Bay Trail Solution



Features

- Support IEI iRIS-2400 remote intelligent solution
- Intel® Celeron® J1900 quad-core SoC
- Robust IP65 aluminum front bezel
- Aesthetic ultra-thin bezel for seamless panel mount installation
- Projected capacitive multi-touch and resistive single touch options
- Dual full-size PCIe Mini card expansion
- 9V~36V DC wide range DC input

iRIS™ IPMI 2.0 Compliant | Fanless | Multi-touch | IP65 | PCIe Mini | USB 3.2 | MOUNT

Specifications

Model		PPC-F12B-BT	PPC-F15B-BT	PPC-F17B-BT	PPC-F19B-BT
LCD	LCD Display	12.1” (4:3)	15” (4:3)	17” (5:4)	19” (5:4)
	Max. Resolution	1024 (W) x 768 (H)	1024 (W) x 768 (H)	1280 (W) x 1024 (H)	1280 (W) x 1024 (H)
	Brightness (cd/m²)	600	450	350	350
	Contrast Ratio	700 : 1	800 : 1	800 : 1	1000 : 1
	LCD Color	16.2M	16.2M	16.7M	16.7M
	Pixel Pitch (mm)	0.24 x 0.24	0.297 x 0.297	0.26 x 0.26	0.294 x 0.294
	Viewing Angle (H-V)	160° / 140°	160° / 150°	170° / 160°	170° / 160°
	Backlight MTBF (hrs)	50000	70000	50000	50000
Motherboard	CPU	Intel® Celeron® processor J1900 (2M cache, up to 2.42 GHz)			
	RAM	2 x 204-pin DDR3L SO-DIMM slot (max. 8GB), pre-installed with 2GB			
Touch	Touchscreen & Controller	5-wire resistive single touch window, 3H/Penmount DMC9000 (Anti-glare Surface) 10-point Projected capacitive touch window, 6H/EETI EXC3188 (Anti-UV, Anti-glare Surface)			
Input Interfaces	I/O Ports & Switches	2 x RJ-45 LAN port 2 x USB 3.2 Gen 1 (5Gb/s) 2 x USB 2.0 1 x HDMI 2 x RS-232 1 x RS-232/422/485 1 x VGA 1 x 9 V~36 V DC jack (4-pin) 1 x 9 V~36 V DC terminal block 1 x Line-out (PPC-F15B & PPC-F17B & PPC-F19B only) 1 x Power switch			
	Expansion	1 x Full-size PCIe Mini slot (mSATA/PCIe/USB signal) 1 x Full-size/half-size PCIe Mini slot (PCIe/USB signal)			
Wireless LAN		802.11 b/g/n (optional)			
Drive Bay		1 x 2.5” HDD/SSD drive bay			
Remote Management Solution		iRIS-2400			
Physical	Construction Material	Aluminum front panel and sheet metal rear cover			
	Mounting	Panel mount, rack mount, VESA 100x100			
	Enclosure Color	Black C			
	Dimensions (mm) (W x L x D)	262.2 x 322.2 x 47.2	303 x 378.5 x 46.2	341.4 x 408.4 x 51.8	372.4 x 447.4 x 52.87
	Weight (Net)	3.2 kg	4.1 kg	5 kg	6.5 kg
	Cutout Dimensions (mm)	244.8 x 304.8	285.6 x 361	323 x 390	355 x 430
Environment	Operating Temperature (with air flow)	-10°C~50°C (14°F~122°F)			
	Storage Temperature	-20°C~60°C (-4°F~140°F)			
	Humidity	10% to 95% (non-condensing)			
	IP Level	IP 65 compliant front panel			
	Safety and EMC	CE & FCC Class A certified			
Power	Power Adapter	P/N: 63040-010060-220-RS 60W Power Adapter Input: 90 ~ 264V AC, 50/60Hz Output: 12V DC			
	Power Requirement	9 V~36 V DC			
	Power Consumption	40W	41W	42W	33W

Ordering Information

Part No.	Description
PPC-F12B-BTi-J1/2G/PC-R13	12.1" 600 cd/m² XGA Panel PC with Intel® Celeron® Processor J1900, TDP 10W, 2GB RAM*1, support iRIS-2400, black color, 9-36V DC input, projected capacitive touch window with AG coating, R13
PPC-F12B-BTi-J1/2G/R-R13	12.1" 600 cd/m² XGA Panel PC with Intel® Celeron® Processor J1900, TDP 10W, 2GB RAM*1, support iRIS-2400, black color, 9-36V DC input, resistive touch window with AG coating, R13
PPC-F15B-BTi-J1/2G/PC-R23	15" 450 cd/m² XGA Panel PC with Intel® Celeron® Processor J1900, TDP 10W, 2GB RAM*1, support iRIS-2400, black color, 9-36V DC input, projected capacitive touch with AG coating, R23
PPC-F15B-BTi-J1/2G/R-R23	15" 450 cd/m² XGA Panel PC with Intel® Celeron® Processor J1900, TDP 10W, 2GB RAM*1, support iRIS-2400, black color, 9-36V DC input, resistive touch window with AG coating, R23
PPC-F17B-BTi-J1/2G/PC-R13	17" 350 cd/m² SXGA Panel PC with Intel® Celeron® Processor J1900, TDP 10W, 2GB RAM*1, support iRIS-2400, black color, 9-36V DC input, projected capacitive touch window with AG coating, R13
PPC-F17B-BTi-J1/2G/R-R13	17" 350 cd/m² SXGA Panel PC with Intel® Celeron® Processor J1900, TDP 10W, 2GB RAM*1, support iRIS-2400, black color, 9-36V DC input, resistive touch window with AG coating, R13
PPC-F19B-BTi-J1/2G/PC-R12	19" 350 cd/m² SXGA Panel PC with Intel® Celeron® Processor J1900, TDP 10W, 2GB RAM*1, support iRIS-2400, black color, 9-36V DC input, AG projected capacitive touch window, R12
PPC-F19B-BTi-J1/2G/R-R12	19" 350 cd/m² SXGA Panel PC with Intel® Celeron® Processor J1900, TDP 10W, 2GB RAM*1, support iRIS-2400, black color, 9-36V DC input, AG resistive touch window, R12

Options

Item	PPC-F12B	PPC-F15B	PPC-F17B	PPC-F19B
Arm	ARM-31-RS			
Stand	STAND-C12-R10 STAND-A12-RS	STAND-C19-R10 STAND-A19-RS	STAND-C19-R10 STAND-A19-RS	STAND-C19-R10 STAND-A19-RS
Wall Mount Kit	WK-190MS-R10			
Panel Mount Kit	FPK-09-R10	FPK-10-R10	FPK-10-R10	FPK-11-R10
Rack Mount Kit	FRK12-R10	FRK15-R10	FRK17-R10	FRK19P-R10
Wi-Fi Kit	EMB-WIFI-KIT01-R20	EMB-WIFI-KIT11-R20	EMB-WIFI-KIT11-R20	EMB-WIFI-KIT11-R20
iRIS (IEI Remote Intelligent System) Kit	iRIS-2400-RS			

Packing List

Item	Q'ty	Remark
PPC-FxxB-BTi Panel PC	1	
Power Cord	1	Part numbers vary by regions
Screw Pack	1	Including necessary screws
Power Adapter	1	9V~36V DC (P/N: 63040-010060-220-RS)

PPC-F12B
Fully Integrated I/O

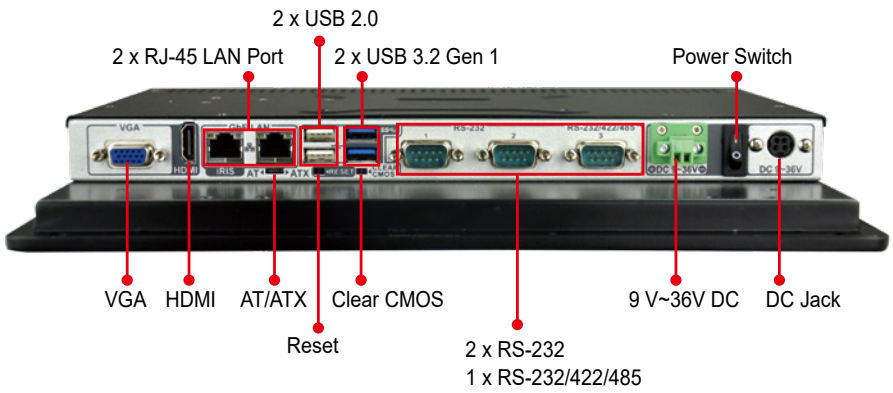

PPC-F15B
Fully Integrated I/O

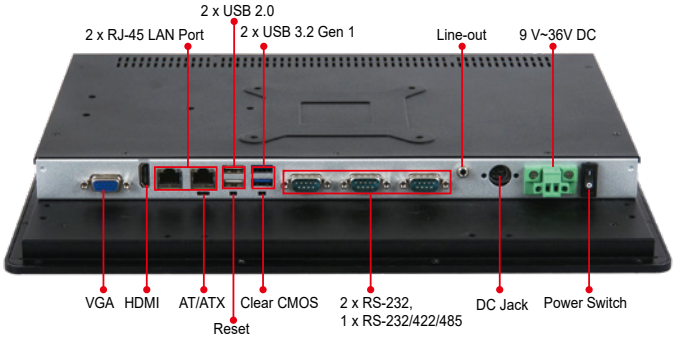

PPC-F17B
Fully Integrated I/O

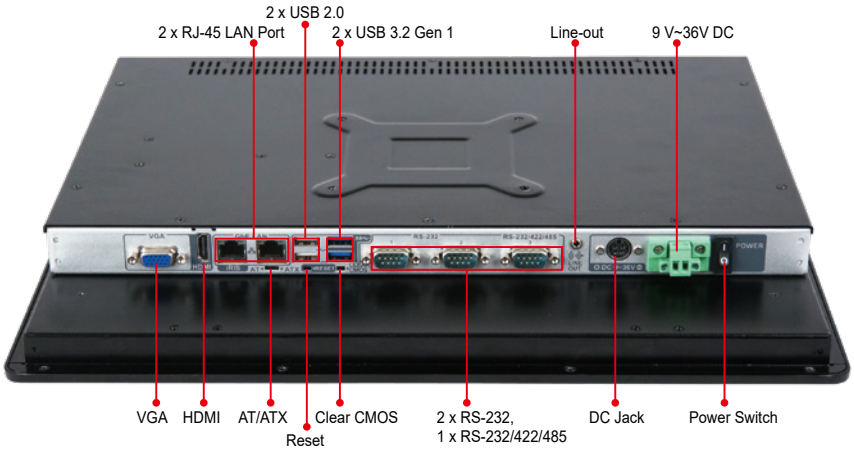

PPC-F19B
Fully Integrated I/O

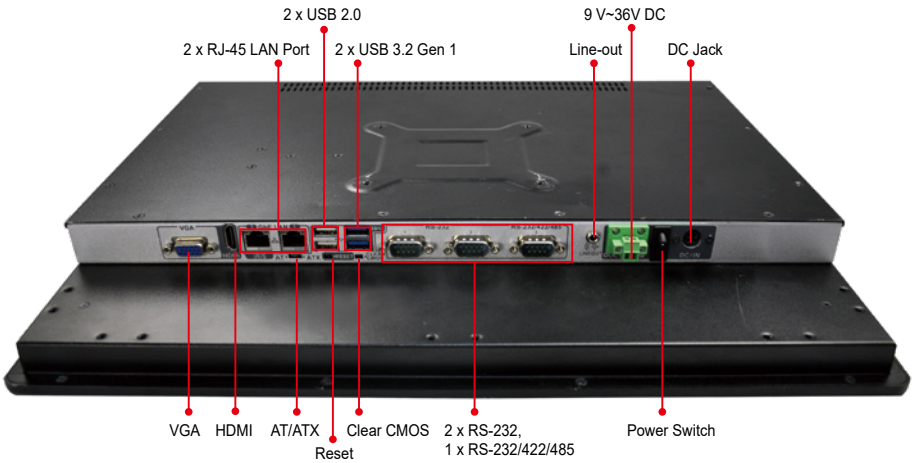

PPC-F12B
Dimensions *(Unit: mm)*

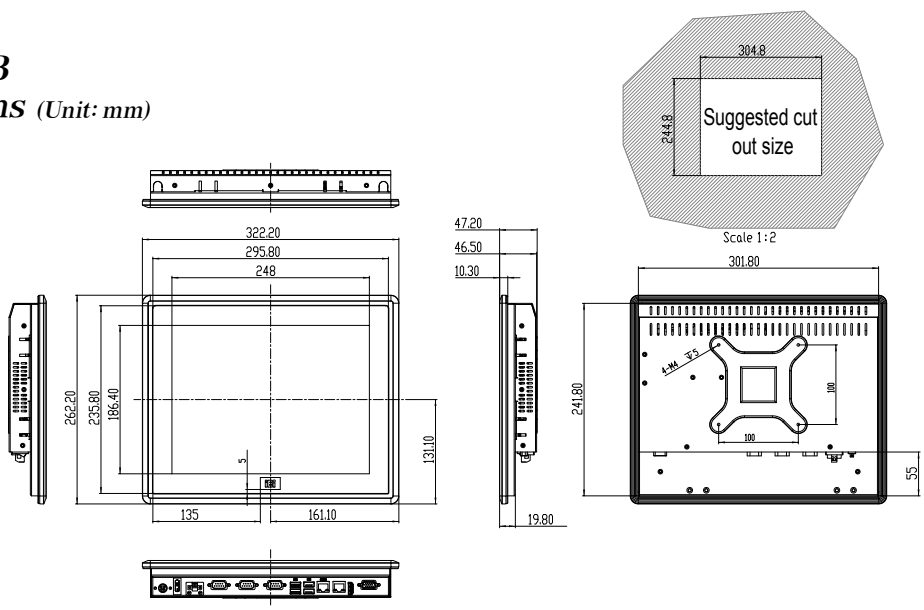

PPC-F15B Dimensions (Unit: mm)

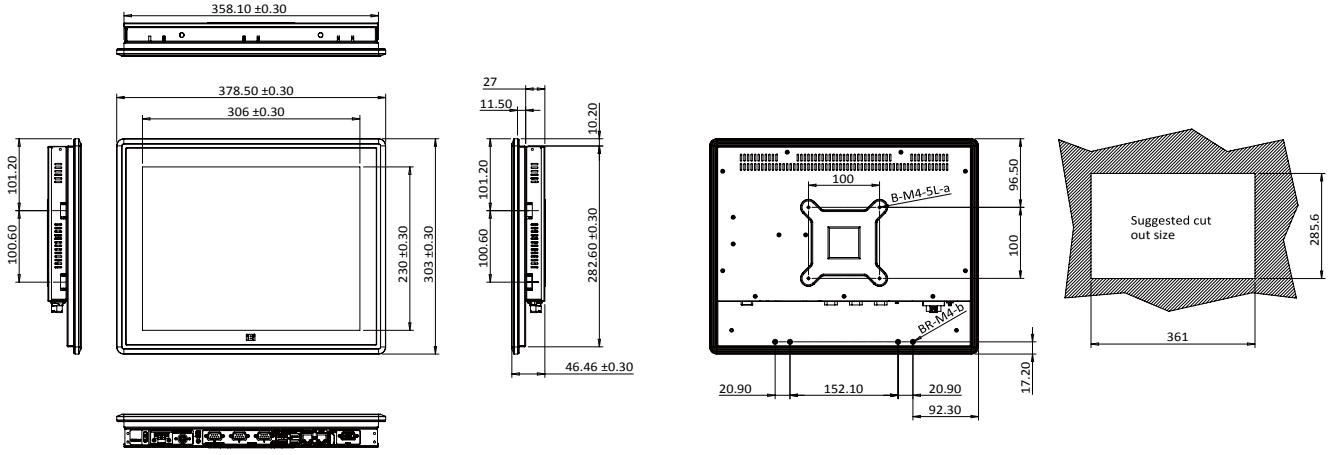

PPC-F17B Dimensions (Unit: mm)

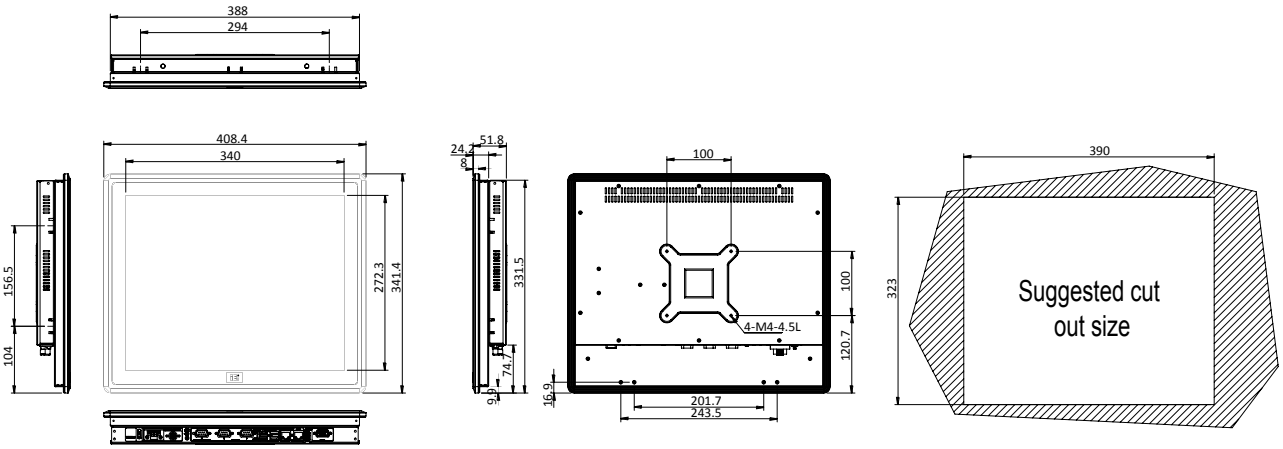

PPC-F19B Dimensions (Unit: mm)

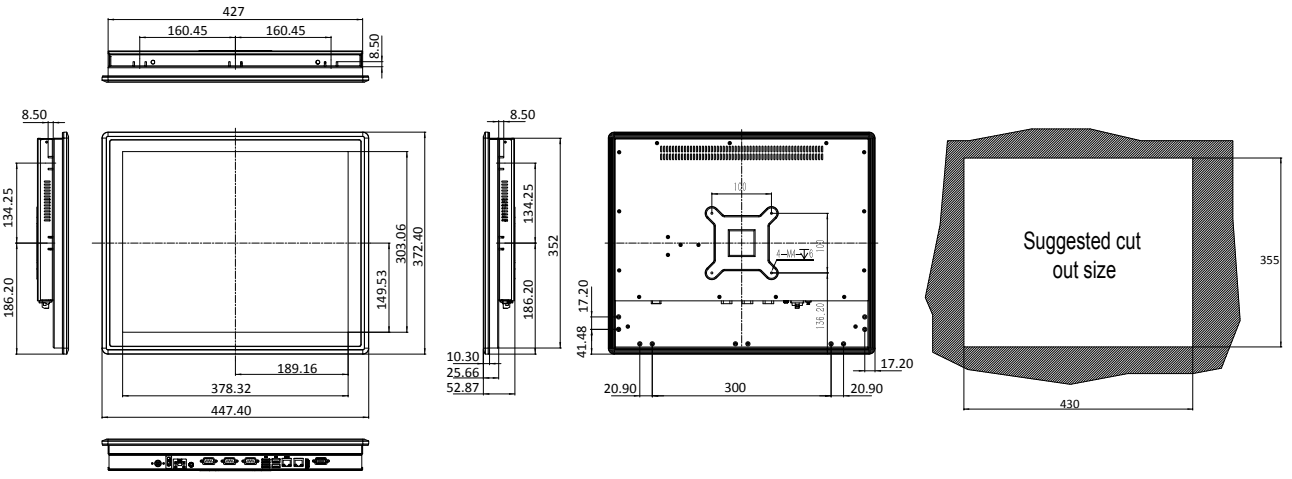

Vertical Market PPC Selection Guide



Marine Series

Model		S19A-QM87	S24A-QM87	S19M	S24M
Display	LCD Size	19"	24"	19"	24"
	Max. Resolution	1280 x 1024	1920 x 1080	1280 x 1024	1920 x 1080
	Brightness (cd/m²)	300	300	300	300
	Contrast Ratio	2000:1	5000:1	2000:1	5000:1
	LCD Color	16.7M	16.7M	16.7M	16.7M
	Pixel Pitch (mm) (HxV)	0.294 x 0.294	276.75 x 276.75	0.294 x 0.294	276.75 x 276.75
	Viewing Angle (V/H)	178° / 178°	178° / 178°	178° / 178°	178° / 178°
	Backlight MTBF (hrs)	50000	50000	50000	50000
Touch	Touchscreen	Projected capacitive touch with USB interface, 6H			
Motherboard	CPU	Intel® 22nm 4th Generation Mobile Core™ i5-4400E 2.7GHz processor		-	-
	Chipset	Intel® QM87	Intel® QM87	-	-
	RAM	Two 204-pin 1600/1333 MHz dual-channel DDR3 SDRAM support up to 16GB		-	-
	Ethernet	GbE1: Intel® I217LM with Intel® AMT 9.0 support GbE2: Intel® I210-AT PCIe controller		-	-
	Audio Codec	N/A	N/A	-	-
I/O Ports and Switches		3 x USB 2.0 2 x USB 3.2 Gen 1 (5Gb/s) 1 x VGA 1 x DVI-D 1 x HDMI 1 x PS/2 (through Y-type cable supporting KB/MS) 2 x CAN-bus 2.0B, 3-pin terminal block (2.5KV isolation protection) 1 x DB-9 RS-232 (non-isolated) , 4 x DB-9 RS-232/422/485 (2.5KV isolation protection) 2 x RJ-45 GbE LAN with teaming support (2KV isolation protection) 1 x Mic-in 1 x Line-out 1 x Line-in 2 x Antenna SMA hole (reserved) 1 x Isolated 9V ~ 36V DC 3-pin terminal block 1 x Power button		• DVI-D Signal Input: 2 x DVI (24-pin, female) • VGA Signal Input: 2 x D-sub (15-pin, female) • VGA Signal Output: 1 x D-sub (15-pin, female) - Clone of VGA IN* • Composite Video Input: 1 x BNC connector (female) Composite Video Output: 1 x BNC connector (female) • RS-232/422/485 for remote control (Non-isolated) • Touchscreen: 1 x USB Type A connector (female) • Ethernet: 1 x RJ-45 connector for remote control • Isolated AC Power Inlet: 100V~240V AC • Isolated DC Terminal Block: 18V~36V DC • 1 x Buzzer	
Drive Bay	HDD Driver Bay	-	-	-	-
	SSD	2 x SSD Bay & 1 x CFast	2 x SSD Bay & 1 x CFast	-	-
Expansion Slot		2 x PCIe Mini card	2 x PCIe Mini card	-	-
System Cooling		Fanless	Fanless	Fanless	Fanless
Environment	Operating Temperature	-15°C to 55°C (5% to 95% RH)			
	Storage Temperature	-20°C to 60°C			
IP Rating		Front IP 66 / Rear IP 22			

Marine Series

The maritime field faces critical environmental challenges, making reliable and rugged systems essential. IEI provides maritime professionals and marine-grade panel PCs and monitors and embedded box that use leading technologies and reliable designs which are perfect for applications on the dock, on the open deck, or in the control room or bridge.

IRIS™ IPMI 2.0 Compliant

TYPE APPROVED PRODUCT DNV·GL MARITIME | IEC 60945 | IACS -E10

ECDIS Implementation Schedule

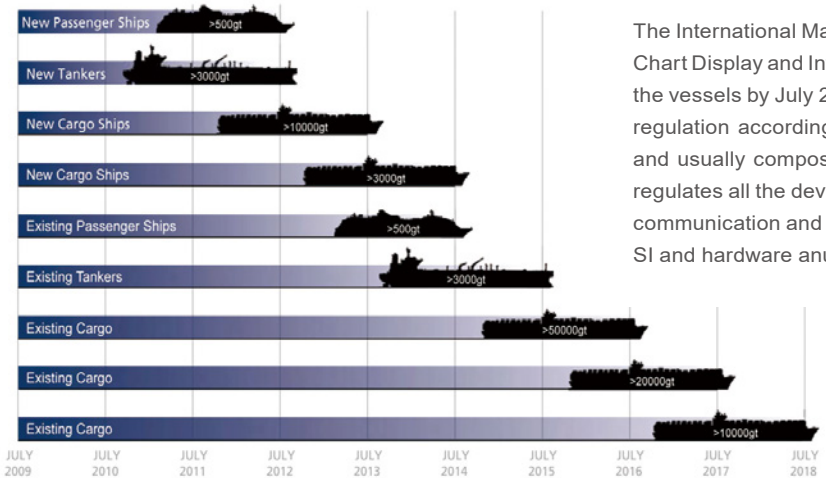

The International Maritime Organization (IMO) has announced that Electronic Chart Display and Information System (ECDIS) should be implemented into all the vessels by July 2018. Both new ships and existing ships should follow this regulation according to the timetable. The bridge systems are complicated and usually composed of multiple sub-systems. ECDIS clearly defines and regulates all the devices and connections, which include data collection, data communication and color calibration. Therefore, this is a huge opportunity for SI and hardware anufacturers.

Dynamic Position System (DPS)

Dynamic Positioning System (DPS) is a closed-loop control system. It is driven by the control system of the ship to counteract the environmental forces to the ship, such as wind, waves and ocean currents. This mechanism could make ship remain in the position on the sea. DPS precisely calculates the propellant force by continuously monitoring the ship position deviation and analyzing the natural forces which could affect ship's navigation direction. This process could make the ship remain in the correct position and maintain the right direction.

DPS is commonly used at various marine applications, such as subsea engineering work, underwater salvage, marine resources survey, marine engineering lifting, marine engineering umbilical laying, deep diving support, underwater engineering operations and marine engineering comprehensive test. DPS consists of measurement systems, control systems, power systems and propulsion systems, and other components. DPS possesses many functions which include maintaining the specified location, targeting, automatic searching for the best bow position, turning point tracking, ROV automatic tracking, changing the center of rotation, automatic navigation, parallel movement and other functions.

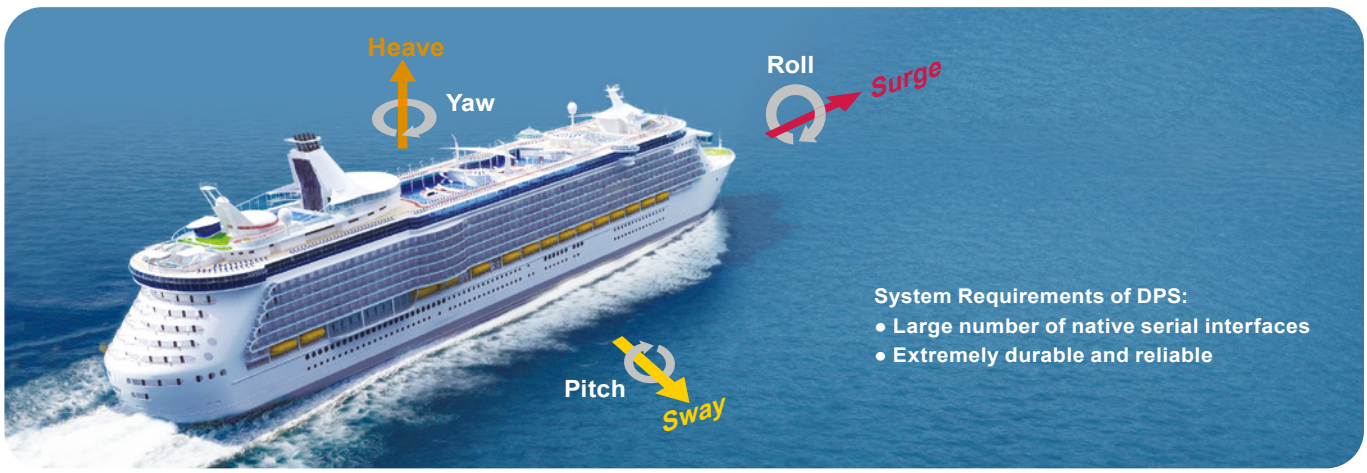

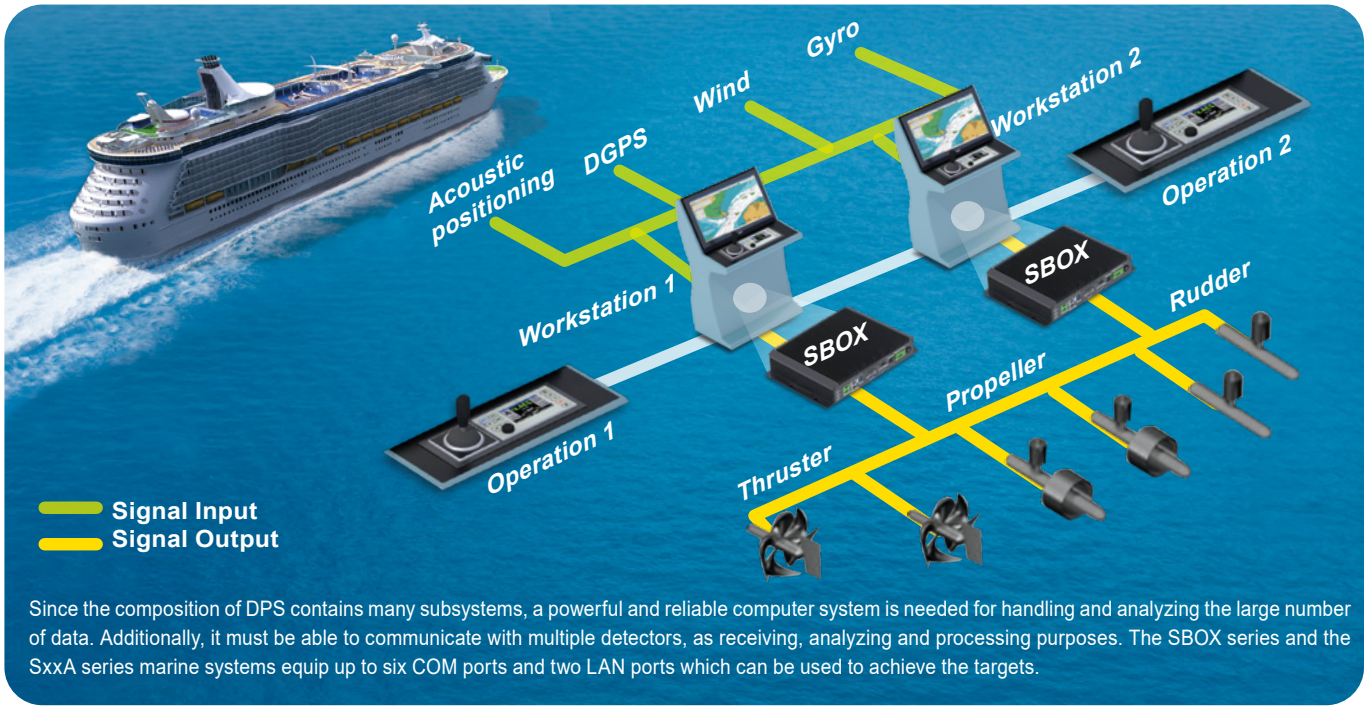

Since the composition of DPS contains many subsystems, a powerful and reliable computer system is needed for handling and analyzing the large number of data. Additionally, it must be able to communicate with multiple detectors, as receiving, analyzing and processing purposes. The SBOX series and the SxxA series marine systems equip up to six COM ports and two LAN ports which can be used to achieve the targets.

Electronic Chart Display and Information System (ECDIS)

The bridge system usually needs to collect and analyze many observation data, including anemometer stations, speed logs, weather stations and GPS signal. In order to precisely observe the changing walruses, the sensors are usually located at the top of ship or in the open deck. Therefore, with the long distance communication, these signals and communication paths should all follow specific regulation such as NEMA 0813. There are large amounts of data received at bridge, and they should be carefully processed and precisely analyzed. A powerful and reliable embedded box or panel PC is necessary for this task. IEI marine embedded box, the SBOX series, equips up to six COM ports which can be used to synchronously handle a large amount of data. The system of ship bridge consists of many sub-systems, which includes navigation system, path control system, radar system, etc. Most of them usually have dual system in order to prevent the failure of primary system. Additionally, dual system could also appear the identical information such as sea chart to the captain and pilot simultaneously. In practical application, dual or more LAN ports are necessary for connecting and controlling multiple monitors. The SBOX series and the S24A/S19A series contain six ports and two LAN ports to fulfill the requirements mentioned above.

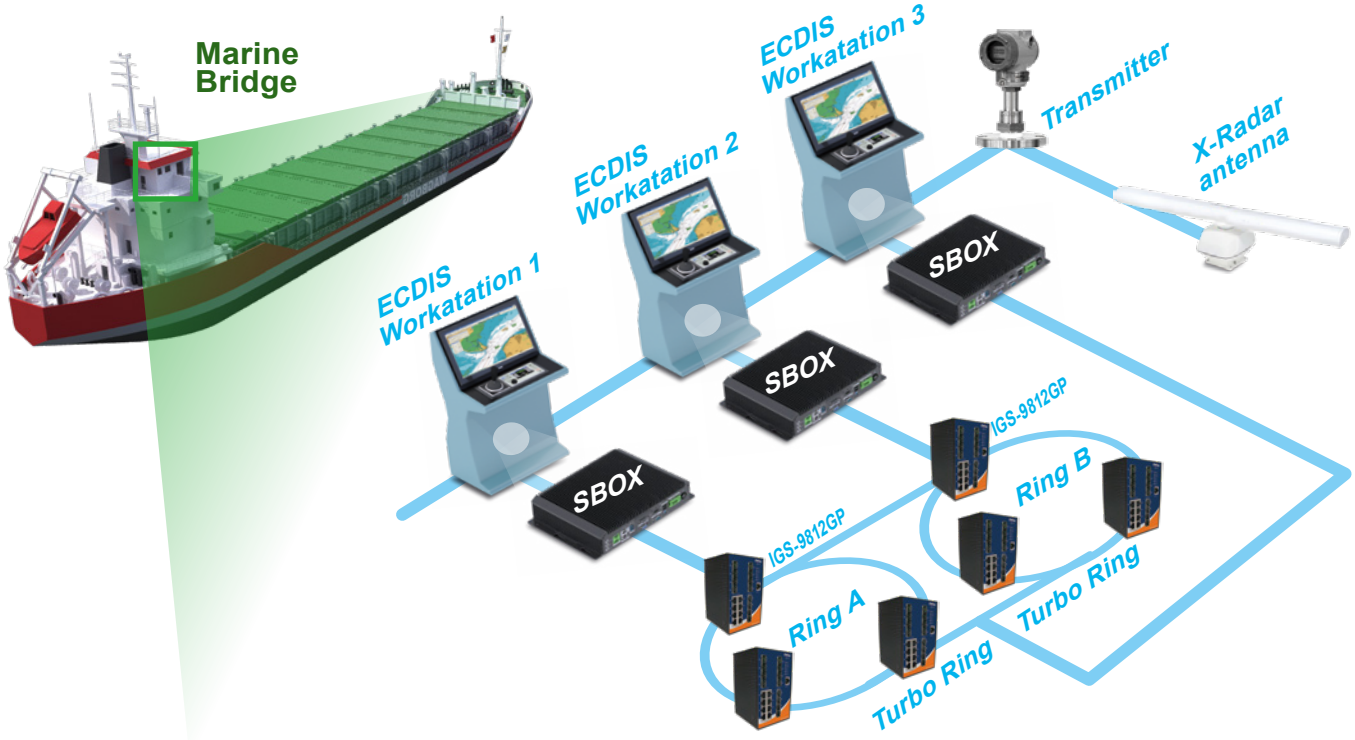

IEI Marine System www.ieiworld.com

Marine Panel PC Series

S19A-QM87

Intel® Core™ i5 Dual-core Processor

S24A-QM87

Intel® Core™ i5 Dual-core Processor



- **19" and 24" Fanless Panel PC with 4th Generation Intel® Core™ i5 Dual-core Processor**
- **-15°C ~ +55°C Wide Temperature and IP66 Protection with Flat-bezel Projected Capacitive Touchscreen**
- **Excellent Visual Performance**
  - Three independent displays
  - Full OSD function configuration
  - 0%~100% full range dimming
  - 178°/178° wide viewing angles
  - Optical bonding improves visibility under bright light (optional)
- **Isolation Protection**
  - RS-232/422/485 isolated serial ports
  - Isolated 18V ~ 36V DC input
  - 2 x Isolated CAN-bus 2.0B
- **iRIS Remote Management Module**

IPMI 2.0 Compliant | IEC 60945 | IACS -E10 | Fanless | Triple Display | Dual GbE

Specifications

Model		S19A-QM87	S24A-QM87
LCD	LCD Size	19"	24"
	Panel Type	PMVA	AMVA
	Max. Resolution	1280 x 1024 (5:4)	1920 x 1080 (16:9)
	Contrast Ratio	2000 : 1	5000 : 1
	Brightness (cd/m²)	300	300
	LCD Color	16.7M	16.7M
	Pixel Pitch (um)	294 x 294	276.75 x 276.75
	Viewing Angles (H-V)	178° / 178°	178° / 178°
	Backlight MTBF (HRs)	50000	50000
Touchscreen & Controller		EEX3188 (10 point), 6H	EEX3188 (10 point), 6H
System	SBC Model	SMB-QM87-R10	
	Chipset	Intel® QM87	
	CPU	Intel® 22nm 4th generation Mobile Core™ i5-4400E 2.7GHz processor	
	RAM	4GB 1600MHz DDR3 SDRAM (2GB*2) Two 204-pin 1600/1333 MHz dual-channel DDR3 SDRAM support up to 16GB	
Input Interfaces	I/O Ports & Switch	2 x USB 2.0 2 x USB 3.2 Gen 1 (5Gb/s) 1 x VGA 1 x DVI-D 1 x HDMI 1 x Mic-in 1 x Line-out 1 x Line-in 2 x Antenna SMA hole (reserved)	1 x Isolated 18V ~ 36V DC 3-pin terminal block 1 x Power button 1 x PS2 (through Y-type cable supporting KB/MS) 2 x CAN-bus 2.0B, 3-pin terminal block (2.5 kv isolation protection) 1 x DB-9 RS-232 (non-isolated) , 4 x DB-9 RS-232/422/485 (2.5 kv isolation protection) 2 x RJ-45 GbE LAN with teaming support (2KV isolation protection)
	Expansion	2 x Full-size PCIe Mini slot, 1 x iRIS-2400 slot (iRIS remote management module)	
Ethernet Controller		GbE1: Intel® I217LM with Intel® AMT 9.0 support GbE2: Intel® I210-AT PCIe controller	
Sensor		Ambient light sensor (0% ~ 100%)	
OSD		Menu, brightness down, brightness up, LCD on/off by cap-sensor (graphics engine: Genesis STDP6038)	
Storage		2 x 2.5" SSD bay with RAID 0/1 function 1 x Accessible CFast socket	
LED Indicator		Power (power on: green; power off: orange)/storage (red, blinking)/IPMI (blue)	
Power Requirement		Isolated 24V DC (18~31.2 V DC), screw-type 3-pin terminal block	
Operating Temperature		-15°C ~ 55°C (5°F ~ 131°F)	
Storage Temperature		-20°C ~ 60°C (-4°F ~ 140°F)	
Humidity		5% to 95% RH	
Thermal Design		Fanless	
Watchdog Timer		Supports 1~255 sec. system reset	
Certifications		EMC: CE, FCC Safety: DNV GL CG-0339, IEC 60945 4th, IACS-E10, IEC 61174 IP rating: IP66 compliant front panel and IP22 compliant rear cover	
Housing		Front aluminum sheet metal (Black C)	
Cut-out Dimensions (L x W)		442 mm x 373 mm	576 mm x 358 mm
Dimensions (L x W x H)		463 mm x 394 mm x 113 mm	592 mm x 374 mm x 113 mm
Net Weight (kg)		9.91	13.03
Gross Weight (kg)		13.38	17.19
Vibration and Shock		IEC 60945 / DNV GL CG-0339 / IACS-E10	
Power Supply (DC Input)		DC Input ATX Power Supply - P/N: 041D710-00-101-RS - 150W power supply - Input: 24V DC, 8-4A (max.) - Output (max.): 12V @13A	
Power Consumption		112W	117W

Ordering Information

P/N	Description
S19A-QM87i-i5/PC/4G-R11	19" 300cd/m² SXGA marine panel PC with Intel® Mobile Core™ i5-4400E 2.7GHz CPU, 2*2GB DDR3 RAM, projected capacitive touch screen, isolated 18-36V DC, iRIS-2400 supported, R11
S24A-QM87i-i5/PC/4G-R11	24" 300cd/m² FHD marine panel PC with Intel® Mobile Core™ i5-4400E 2.7GHz CPU, 2*2GB DDR3 RAM, projected capacitive touch screen, isolated 18-36V DC, iRIS-2400 supported, R11

Options

Item	Part No.	Description
Panel Mount Kit	PK-S19A-R10	For S19A
	PK-S24A-R10	For S24A
Desktop Stand	STAND-S24A-R10	For S19A & S24A
Ceiling Mount Kit	CEILMT-S24-R10	For S19A/S24A
HDMI Lockable Kit	HDMI-LK-R10	Universal HDMI Locking Adapter
iRIS Module	iRIS-2400-R10	IPMI 2.0 adapter card with AST2400 BMC chip for DDR3 SO-DIMM socket interface

Packing List

Item	Q'ty	Remark
S19A-QM87 or S24A-QM87	1	
Screw Pack	1	Including necessary screws
PS/2 Cable	1	Round cable; PS/2 cable
Wire Strain Band	3	Wire strain band



STAND-S24A-R10



CEILMT-S24-R10

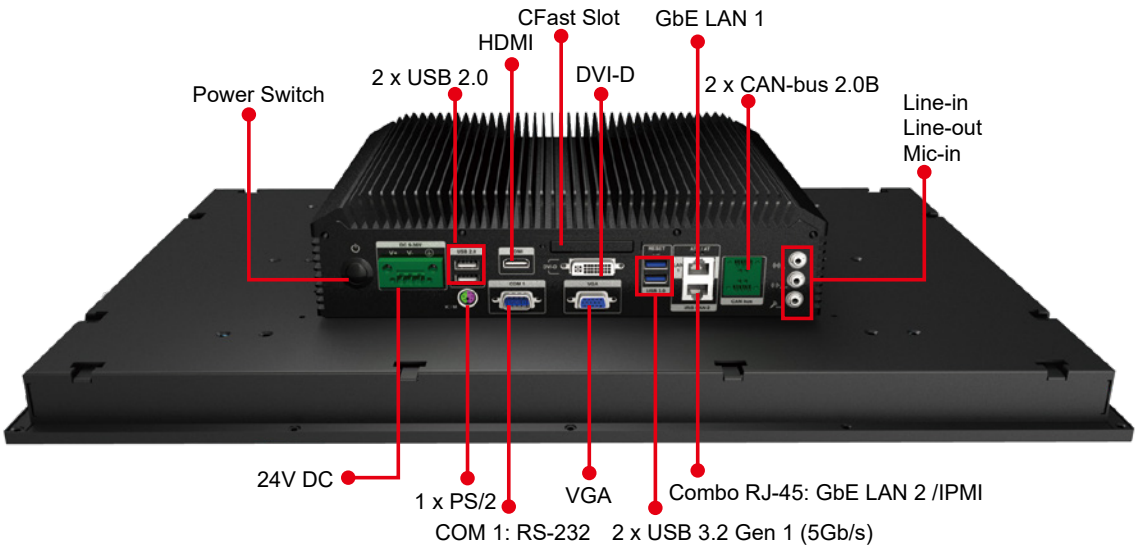

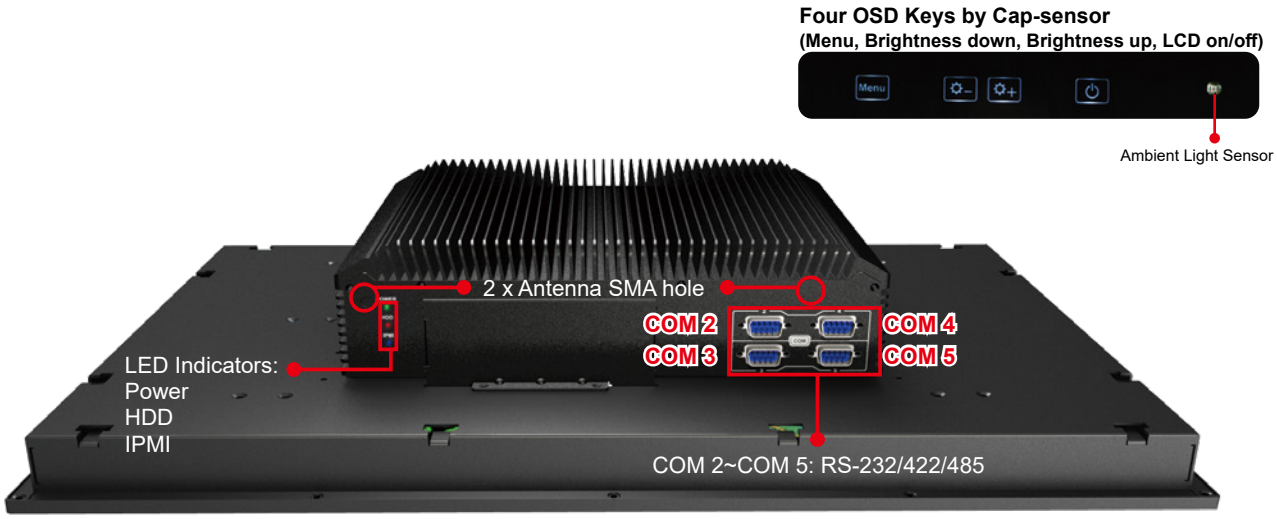

S19A-QM87 Dimensions

(Unit: mm)

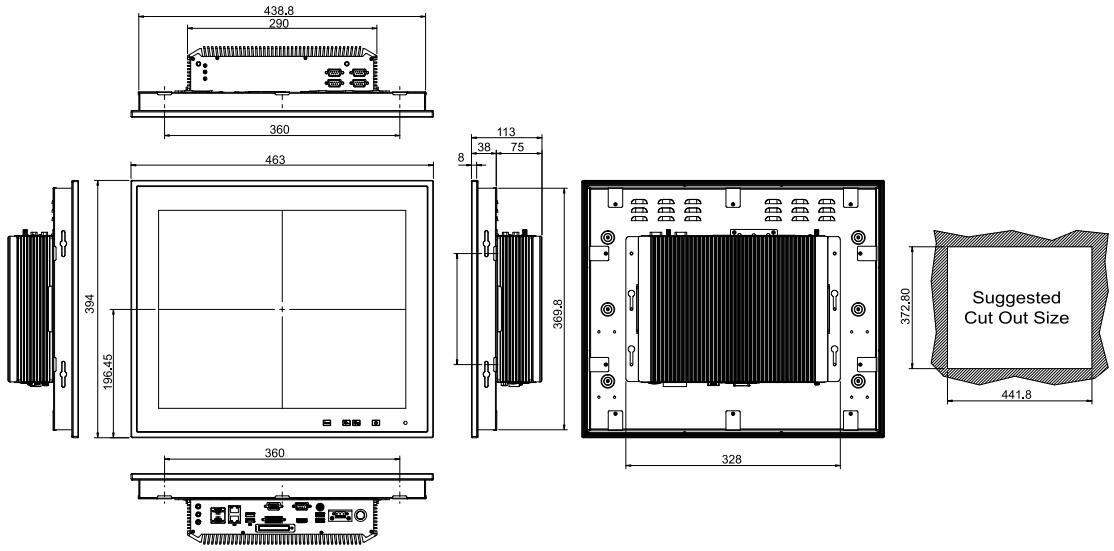

S24A-QM87 Dimensions

(Unit: mm)

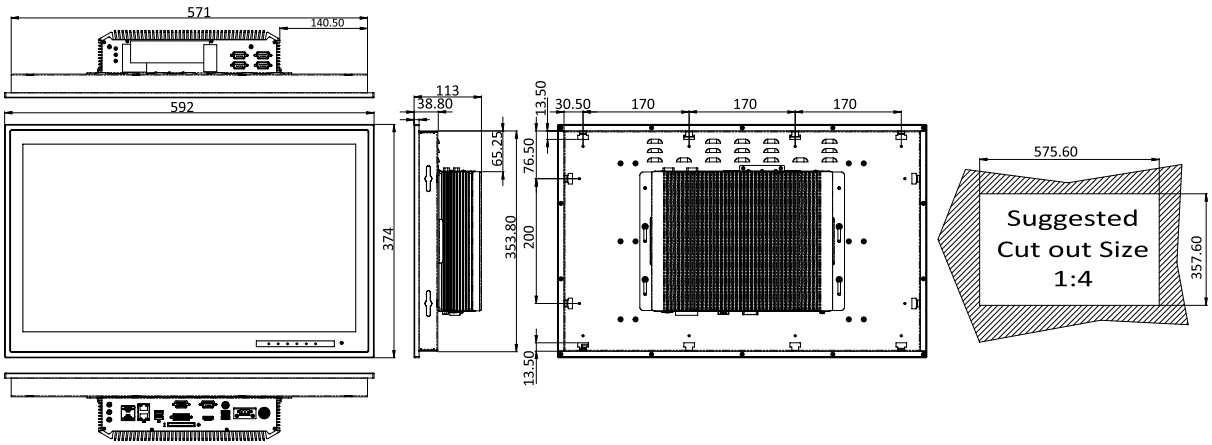

www.ieiworld.com

IEI Marine System

Marine Embedded Box Series

SBOX-100-QM87

Intel® Core™ i5 Dual-core Processor



Features

- Fanless marine computer with 4th Generation Intel® Core™ i5 dual-core processor
- -15°C ~ +55°C wide temperature
- Isolation protection
  - » 4 x RS-232/422/485 isolated serial ports
  - » Isolated 18 V~24 V DC input
  - » 2 x Isolated CAN-bus 2.0B
- 2 x 2.5" SSD bay with RAID 0/1 function
- Supports IEI iRIS-2400 (IPMI 2.0 compliant)

QTS-Gateway | IPMI 2.0 Compliant | Fanless | CAN-Bus | Triple Display | Dual HDD

■ Intel® Core™ i5 High Performance Computing Power in a Fanless Design

IEI's high performance marine solutions are built with the powerful Intel® Core™ i5 CPU within a fanless system architecture. No matter your applications are general marine system management, monitoring or conning systems, radar systems, or ECDIS navigation, IEI's marine computers will give you the most stability than ever.

• Improved CPU performance with Intel® 22nm 4th Generation Mobile Core™ i5-4400E 2.7 GHz processor
• Two 204-pin 1600/1333MHz dual-channel DDR3 SDRAM support up to 16 GB

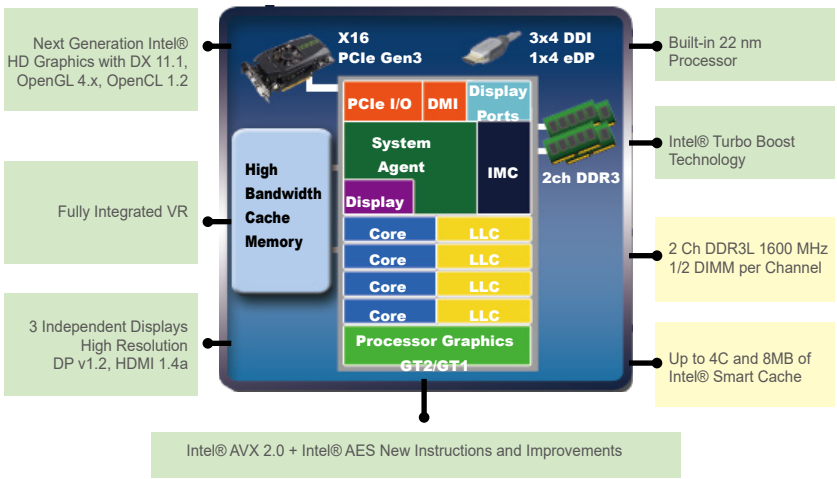



With IEI's fanless solutions, your vessels can avoid the bothersome of replacement of fan, increasing safety and efficiency for the crew and the entire ship.

Three independent aluminum heat sinks help the heat dissipate averagely, and help the system efficiently achieve wide operating temperature range between -15°C~55°C.

■ 3 independent displays: HDMI, DVI, and VGA

The three simultaneously independent displays are supported via the on-board video output combinations of VGA, DVI and HDMI. This versatile combination of display output options make the marine system ideal for multi-monitor required applications in the bridge room.

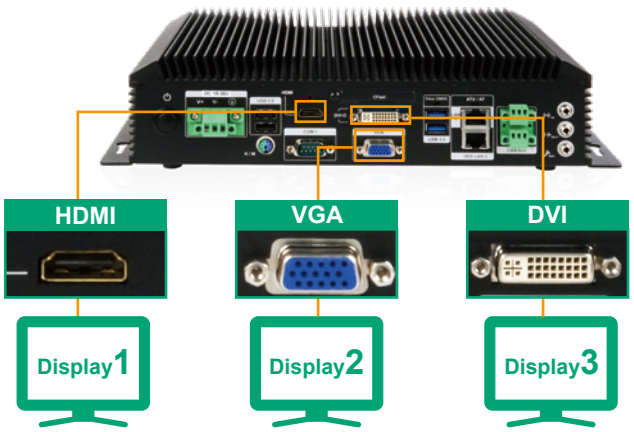



■ Multiple Isolated Ports for Comprehensive Protection against Electrical Surges

Ground loop and electric surges are common in the marine applications of electronic products due to the dense placement of devices. These stray electrical signals can cause equipment damage or malfunction.





■ Isolated 18 V~24 V DC power 2250 V DC Input to Output Basic Insulation

■ 2.5 kV isolation protection on the RS-232/422/485

IEI marine computer is protected from any stray electrical signals from other devices on the ship. Electric surges that were generated from other electronic devices which often passed through serial lines to the marine computer can cause severe damage and malfunction to the computers.

■ Two independent CAN 2.0B channels with 2.5 kV isolation protection

CAN 2.0B is a kind of marine electronic data network for communication between marine electronic devices such as chart plotters, navigation instruments, GPS receivers, etc.

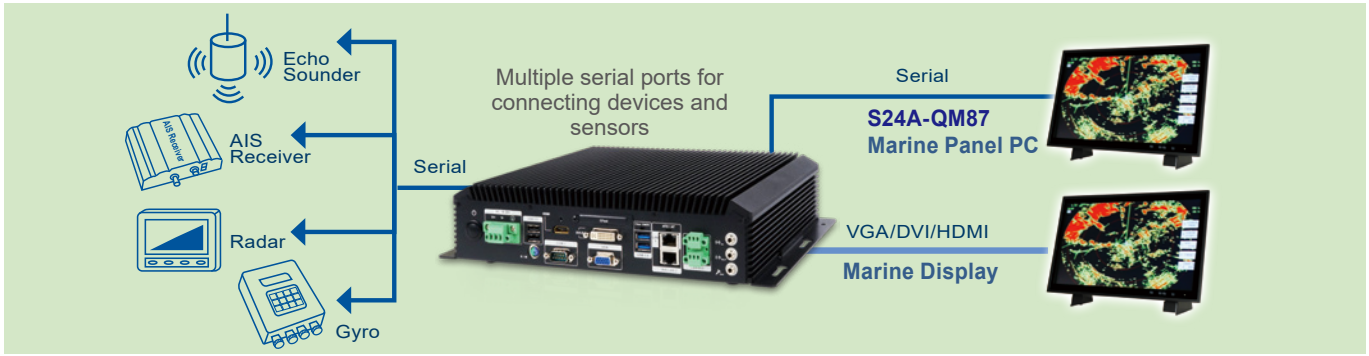

■ IEI Remote Intelligent Management System

The marine computer supports IEI iRIS remote management solution which helps users to manage multiple devices through single management interface and elevates work efficiency. The iRIS solution only requires a module and Internet connection!

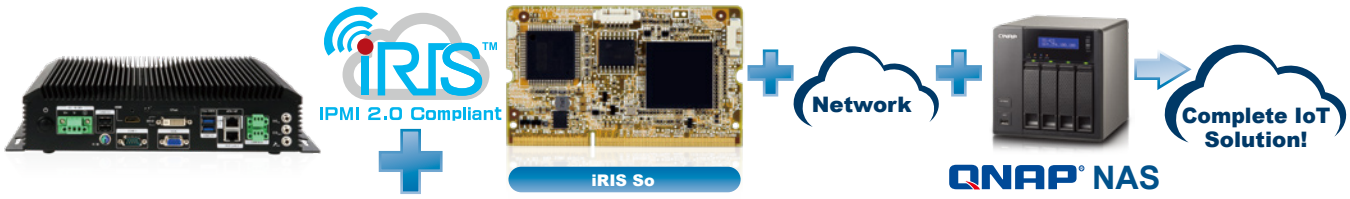

iRIS Key Feature	Detailed Functions	iRIS Key Feature	Detailed Functions
System health monitor	• Hardware monitor • Health log • Event log	**Screen record**	• Remote video streaming record • Event Trigger Setting & video record
Remote system maintenance	• Remote BIOS update • Remote OS recovery • Remote KVM + One Key Recovery • Remote out-off-band backup	**Remote power control**	• Reset Power • Power Off Server – Immediately • Power Off Server – Orderly • Power On Server • Power Cycle Server
Active alert & notice	• Send instant system alerts via e-mail • Send instant system alerts via SMS • Send instant system alerts to management server	**Remote troubleshooting**	• Remote software update • Remote OS installation & recovery • Remote KVM • Post code display
Remote device control	• Fan control • Remote KVM • Remote setting BIOS	**Diagnose before dispatch**	• Health log analysis • Event log analysis
		Group control	• Group control

Front view

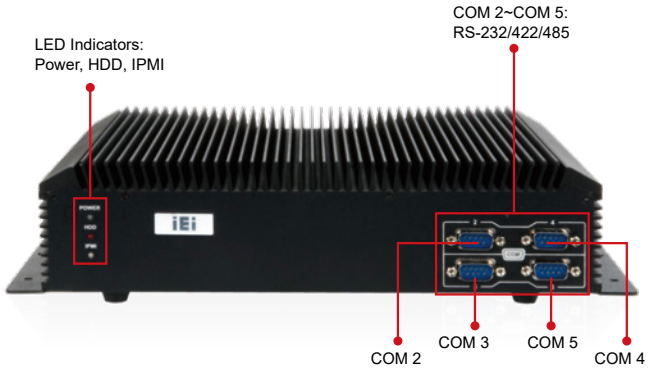

Rear view

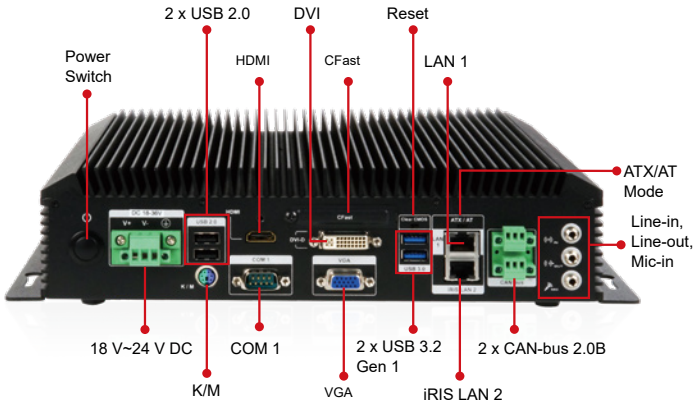

Specifications

Model		SBOX-100-QM87
Chassis	Color	Black
	Dimensions (WxHxD) (mm)	290 x 75 x 225
	System Fan	Fanless
	Chassis Construction	Extruded aluminum alloy
Motherboard	CPU	Intel® mobile Core™ i5-4400E (2.7 GHz, 37W)
	Chipset	Intel® QM87
	System Memory	2 x 204-pin DDR3 SO-DIMM slot (system max. 16 GB) Pre-installed 4 GB DDR3 SO-DIMM
IPMI	iRIS Solution	iRIS-2400
Storage	Hard Drive	2 x 2.5" SATA 6Gb/s SSD bay with RAID 0/1 function
	CF Card/CFast	1 x CFast
I/O Interfaces	PS2 (KB/MS)	1
	USB 3.2 Gen 1	2
	USB 2.0	2
	Ethernet	2 x RJ-45 with teaming support 1 x PCIe GbE by Intel® I217LM 1 x PCIe GbE by Intel® I210-AT (2 with 2 kV isolation)
	COM Port	1 x DB-9 (non-isolated) 4 x RS-232/422/485 (with 2.5 kV isolation)
	CAN-bus/OBD-II	2 x CAN-bus (with 2.5 kV isolation)
	Display	1 x VGA, 1 x DVI-D, 1 x HDMI
	Resolution	VGA: Up to 1920 x 1200 @ 60 Hz HDMI: Up to 2500 x 1600 @ 60 Hz DVI-D: Up to 2500 x 1600 @ 60 Hz
	Audio	1 x Line-out, 1 x Line-in, 1 x Mic-in
	Wireless	2 x Antenna SMA hole (reserved)
Expansions	PCIe Mini	2 x Full size*
LED Indicator & Button	Indicator	Power (power on: green, power off: orange), storage (red, blinking), IPMI (blue)
Power	Power Input	Terminal block: Isolated 24V DC (18~31.2 V DC)
	Consumption	100 W (Intel® mobile Core™ i5-4400E with 4 GB DDR3 memory)
Reliability	Mounting	Wall mount
	Operating Temperature	-15°C ~ 55°C (5°F ~131°F) with air flow (SSD)
	Storage Temperature	-20°C ~ 60°C (-4°F ~140°F)
	Humidity	5% ~ 95%, non-condensing
	Operating Shock	IEC 60945 and DNV 2.4 IASC-E10 compliant
	Operating Vibration	
	Weight (Net/Gross)	4.08 kg / 6.03 kg
	Safety/EMC	EMC/CE/FCC/DNV GL CG-0339, IEC 60945 4th, IACS-E10, IEC 61174 compliant IP rating: IP22 compliant rear cover
OS	Supported OS	Microsoft® Windows® Embedded 8, Microsoft® Windows® Embedded Standard 7 E

*SBOX-100-QM87i-QGW-R10 has only one Half-size PCIe Mini slot

Dimensions *(Unit: mm)*

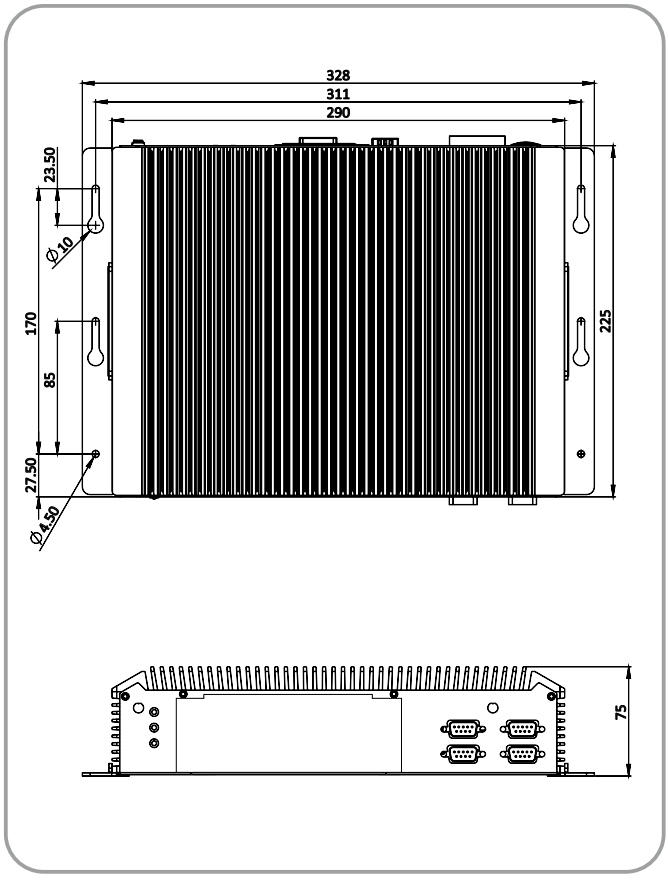

Ordering Information

Part No.	Description
SBOX-100-QM87i-i5/4G-R10	Fanless marine computer with Intel® Mobile Core™ i5-4400E 2.7 GHz processor, 4 GB DDR3 memory, iRIS-2400 supported, isolated 18 V~36 V DC, R10
SBOX-100-QM87i-QGW-R10	Fanless marine computer with Intel® Mobile Core™ i5-4400E 2.7GHz Processor, DDR3 8GB, iRIS-2400 supported, with QTS-Gateway, isolated 18~36V DC, RoHs

Packing List

Item	P/N	Qty	Remark
PS/2 cable	32006-000300-100-RS	1	PS/2 cable
Rubber pad & screw pack		1	Rubber pad & screw pack

IEI Marine System www.ieiworld.com

Marine Monitor Series

The marine monitor series possesses many sophisticated features that fit with practical marine environment, including front panel IP 66 dust- and water-proof level, wide-rang operating temperatures, multi-point capacitive touch, wide viewing angles and OSD control. Especially, optical bonding is a good choice for the use of high brightness environments. Versatile mounting ways offer customers flexible methods in accordance with different operating environments.

■ Optical Bonding Enhance Visibility (optional)

The lightness is a crucial factor to sailing safety. IEI provides an option for optical bonding between touchscreen and LCD panel. The light transmitting between various medias could produce reflection. Traditionally, there is an air gap between touchscreen and LCD panel, which could reflect light seriously. It could affect the sailing security tremendously. Adding optical bonding material between touchscreen and LCD panel can improve reflection effectively and increase brightness by 10%. Furthermore, it not only increases hardness of touchscreen but also reduces power consumption.

Improving the viewing experience

- Increase contrast ratio by 400% in sunlight
- Increase brightness by 10%

Increasing the display ruggedness

- Increase the falling ball impact resistance by up to 3 times

Reduced power consumption

- By reducing the light loss due to reflection

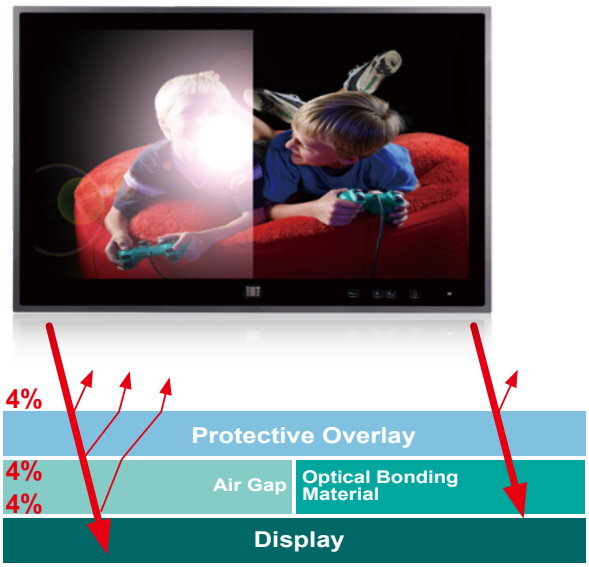

■ ECDIS (optional)

For industrial and commercial applications, color rendering accuracy and consistency are absolutely essential. The human eye is generally likely to be impacted by environment and misled presentation of colors in the brain. The maritime environment is much more ruggedized compared with general industrial environment. The requirements for the degree of light and dark and color of accuracy are more stringent. Color calibration technology ensures that monitor would effectively show the largest accuracy and minimum deviation of artificial color. IEI marine monitors and panel PCs follow the IEC 61174 ECDIS regulation. It is performed by monitoring up to N checkpoints and measuring the color and brightness of the display. After precisely calculating and highly reliable calibrating, the profile matrix will be stored in the firmware of monitor. The monitors (PPCs) compliant with ECDIS specifications will provide a more safe and secure maritime environment.

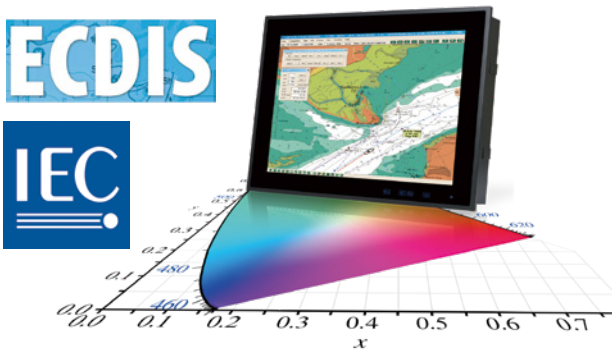

■ Adjustable LCD Brightness and Auto-Dimming Available

The auto-dimming function could slightly modify LCD brightness according to ambient light. To consider the safety of navigation and operators' eye comfort, both LCD brightness and OSD brightness are designed to be programmable.

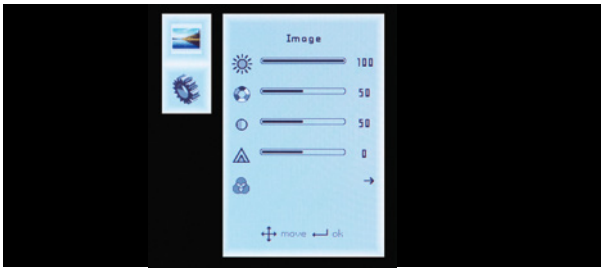

OSD Control on Front Panel

On Screen Display (OSD) offers customers a quick way to modify the LCD brightness. In contrary to traditional tuner, the full flat OSD design not only features beautiful outward appearance but also improves the shortcoming of dust accumulation in physical button.



Lockable HDMI Cable Support (optional)

The lockable HDMI cable design not only increase reliability but also reduces the possibilities of accidental human errors. Therefore, important information could be displayed continuously.



6H Multiple Projected Capacitive Touchscreen

The IEI marine products provide capacitive multi-touch up to 10 points (2-point on 24" model). In practical applications, 10-point touch can simulate engine button and pump switch so that there will be less real buttons. This can enhance the reliability of marine infrastructure.

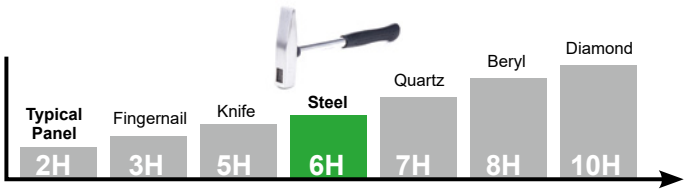

MOH's Hardness Rating



6H 10-point Touch for S19M **6H 2-point Touch for S24M**

Picture-in-Picture (PIP) Function & Surveillance Application

Picture-in-Picture function offers high efficiency to surveillance. You can monitor the radar information and observe surveillance video simultaneously. Simply connect BNC camera to BNC input port and link DVR to BNC output port. Therefore, you can monitor and record at the same time, and the record can be saved for further use.



PIP Matching Table

		Main Channel				
		VGA1	VGA2	DVI1	DVI2	CVBS1
Sub Channel	VGA1	X		X	X	X
	VGA2		X	X	X	X
	DVI1	X	X	X		X
	DVI2	X	X		X	X
	CVBS1	X	X	X	X	X

Reliable Power System

There are usually two systems - one master for use, and one slave for backup. IEI provides isolated redundant power, which means you will have separate power inputs, including AC source and DC source. When AC source is terminated, the DC source will continue to supply power to the device.

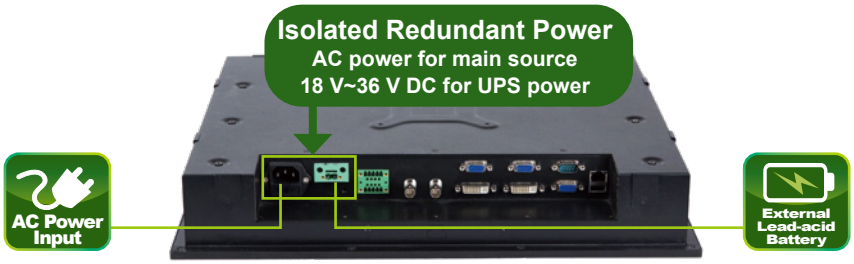

■ Dual Video Input Support

The IEI marine products equips with two VGA inputs and two DVI inputs. VGA is designed for the old ships while DVI is designed for the new ones. Additionally, in order to prevent failure of the main system, dual video input design is provided for much more reliability. Hence, operation will not be terminated due to switching between systems

Dual Video Input Support
Redundant VGA & DVI

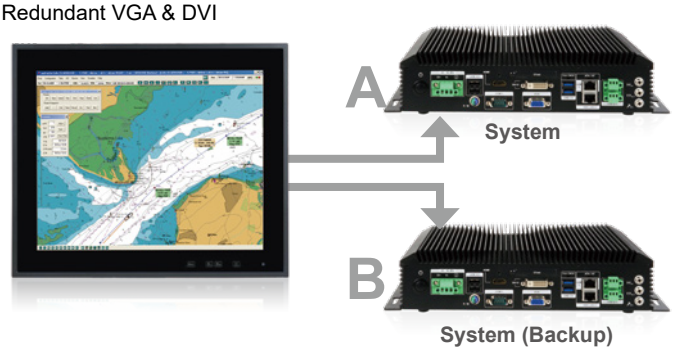

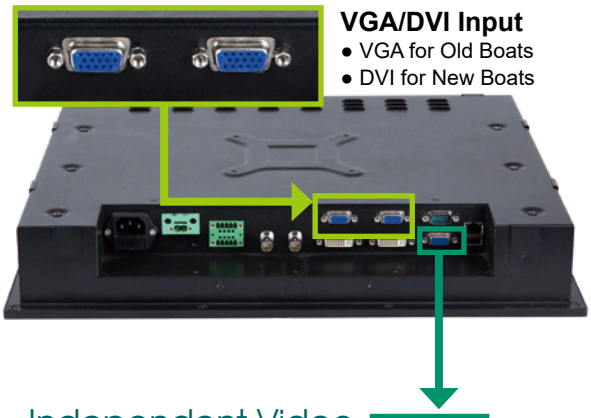

VGA/DVI Input
- VGA for Old Boats
- DVI for New Boats

■ Independent Video Output Support

VGA output port features display cascade function, providing a convenient way to duplicate display signal. This function helps customers to connect devices quickly and easily.

■ Daisy Chain OSD Remote Control

It is essential to show the same displays to captains and pilots through the monitors which are usually cascaded at the ship bridge. The marine monitor equips both VGA input and VGA output. By connecting the VGA-out of the first monitor to the VGA-in of the second monitor, the IEI marine monitors feature group display with maximum up to 16 screens in the group. To comply with the ECDIS regulation, adjusting the brightness and contrast on all monitors at the same time is necessary, and this can be achieved through the Ethernet or serial COM ports. LAN is used to communicate in long distance in the group; as for short distance, COM port is the best choice. The LAN port can also be used for updating firmware and maintaining service.

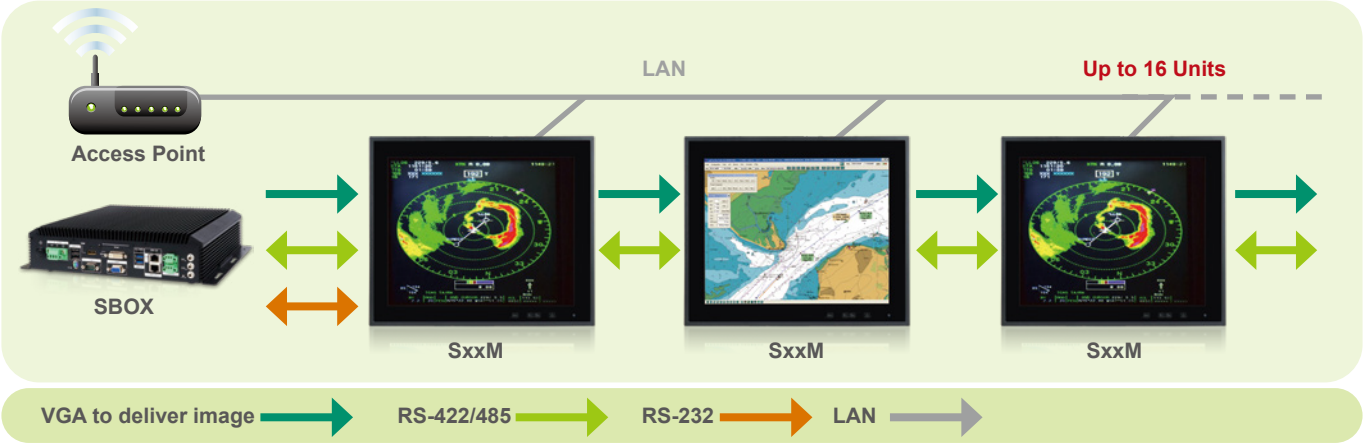

■ Versatile Mounting Methods (optional)

Versatile mounting methods provide customers a secure way to settle the instrument. We provide three different mounting kits for customers, which include stand, ceiling mount kit and panel mount kit.


Stand Alone


Ceiling Mount


Panel Mount

IEI Marine System www.ieiworld.com

Marine Monitor Series

S19M

19” IP66 Marine Monitors

S24M

24” IP66 Marine Monitors



Features

- **IP66 Front / IP22 Rear**
- **-15°C ~ +55°C Wide Temperature and Flat-bezel Projected Capacitive Touchscreen**
- **Excellent Visual Performance**
  - Full OSD function configuration
  - 0%~100% full range dimming
  - 178°/178° wide viewing angles
- **Multiple Video Input**
  - Two VGA, two DVI, and one BNC
- **Multiple Video Output**
  - One VGA and one BNC
- **Dual Isolated AC/DC Input with Redundant Power Protection**
- **Remote OSD Settings through LAN, RS-232, RS-422 and RS-485**

Specifications

Model		S19M	S24M
LCD	LCD Size	19”	24”
	Panel Type	PMVA	AMVA
	Max. Resolution	1280 x 1024 (5:4)	1920 x 1080 (16:9)
	Contrast Ratio	2000 : 1	5000 : 1
	Brightness (cd/m²)	300	300
	LCD Color	16.7M	16.7M
	Pixel Pitch (um)	294 x 294	276.75 x 276.75
	Viewing Angles (H-V)	178° / 178°	178° / 178°
	Backlight MTBF (HRs)	50000	50000
Touchscreen & Controller		EXC7920 (10-point), 6H	EXC7200 (2-point), 6H
Scalar Chip		STDP8028	
I/O Ports		• DVI-D Signal Input: 2 x DVI (24-pin, female) • VGA Signal Input: 2 x D-sub (15-pin, female) • VGA Signal Output: 1 x D-sub (15-pin, female) - Clone of VGA IN* • Composite Video Input: 1 x BNC connector (female) Composite Video Output: 1 x BNC connector (female) • RS-232/422/485 for Remote control (non-isolated) • Touchscreen: 1 x USB Type A connector (female) • Ethernet: 1 x RJ-45 connector for remote control • Isolated AC Power Inlet: 100V~240V AC • Isolated DC Terminal Block: 18V~36V DC • 1 x Buzzer	
PIP		Yes	
OSD Button		P-CAP button (LCD on/off, Menu, Auto, Up, Down, Left, Right)	
LED/Sensor		Ambient light sensor (0%~100%)	
Power Requirement		Multi-power Supply: Isolated AC Power: 100-240V, 2-1A, 50-60Hz Isolated DC Power: 18-36V, 8-4A	
Operating Temperature		-15°C ~ 55°C	
Storage Temperature		-20°C ~ 60°C	
Humidity		5% to 95% RH	
Thermal Design		Fanless	
Housing		Aluminum front , sheet metal back (Black C)	
Cut-out Dimensions (W x L)		442 mm x 373 mm	576 mm x 358 mm
Dimensions (W x L x D)		463 mm x 394 mm x 113 mm	592 mm x 374 mm x 113 mm
Mounting		VESA 100mm x 100mm	VESA 100mm x 100mm
Net Weight (kg)		7.74	11.48
Gross Weight (kg)		11.54	15.97
Approvals		EMC: CE, FCC	
		Safety: DNV GL CG-0339, IEC 60945 4th, IACS-E10	
		IP Rating: IP66 front, IP22 rear	

Ordering Information

PN	Description
S19M-AD/PC-R11	19" SXGA 300cd/m² Marine Display with AC and DC redundant power, PCAP touch screen, R11
S24M-AD/PC-R11	24" FHD 300cd/m2 Marine Display with AC and DC redundant power, PCAP touch screen, R11

Options

Item	Part No.	Description
Panel Mount Kit	PK-S19M-R10	For S19M
	PK-S24M-R10	For S24M
Desktop Stand	STAND-A21-R10	For S19M & S24M

Packing List

Item	Q'ty	Remark
VGA	1	VGA signal cable
DVI	1	DVI signal cable
USB	1	USB touchscreen cable
Power Cord	1	Power cord
S19M or S24M	1	

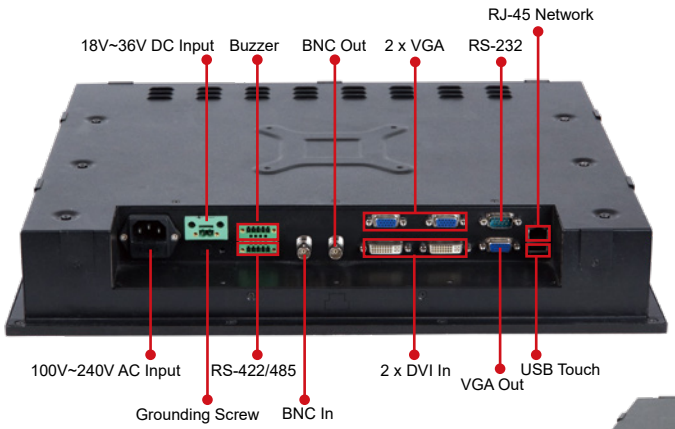

S19M
Fully Integrated I/O

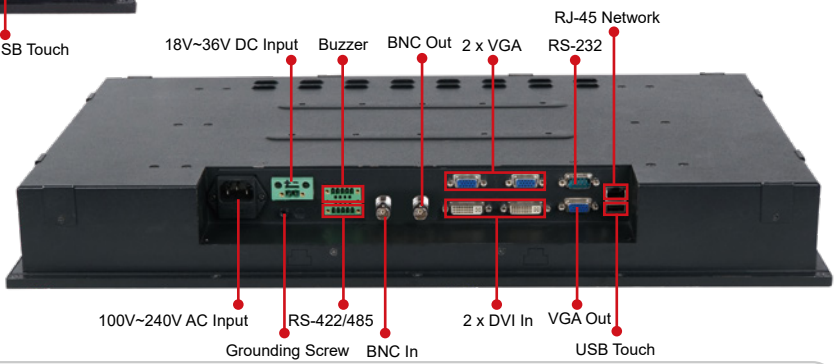

S24M
Fully Integrated I/O

S19M Dimensions
(Unit: mm)

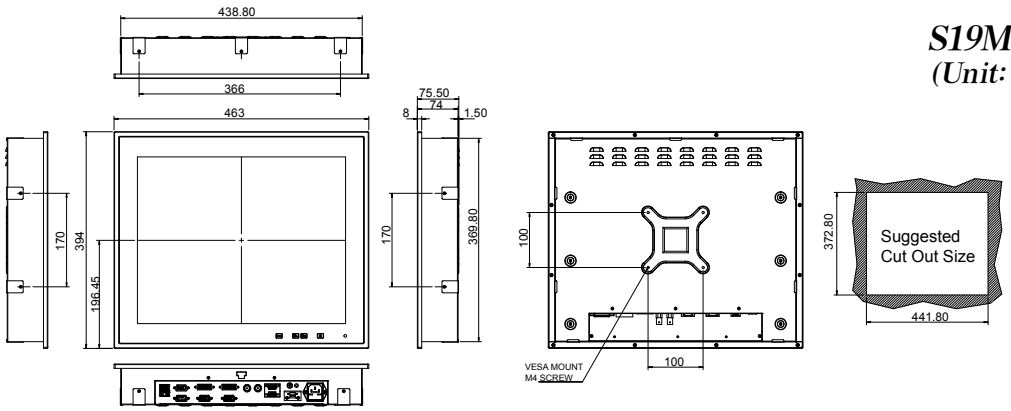

S24M Dimensions
(Unit: mm)

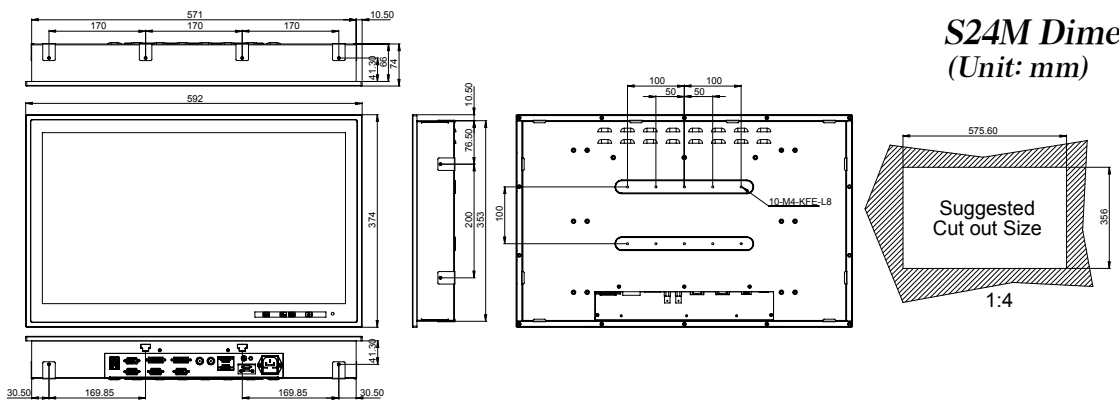

UPC Series

UPC-F12C-ULT3

Intel® Core™ i5 and Celeron® ULT Processor



Features

- 12.1" fanless panel PC with Intel® Skylake ULT processor
- IP66 6-side protection with M12 connector I/O cover
- IP65 6-side protection with standard cable I/O cover
- Built-in wireless 802.11 a/b/g/n/ac and Bluetooth V4.0
- Operating temperature : -20°C ~ 60°C
- Flat glass PCAP touch with 6H hardness, resistive touch window

Wireless 802.11b/g/n | Fanless | Touchscreen | IP66 | -40°C~60°C | Redundant Dual DC

Specifications

Model		UPC-F12CM-ULT3	UPC-F12C-ULT3
Display	LCD Display	12.1"	
	Max Resolution	1024(W) x 768(H)	
	Brightness (cd/m²)	600	
	Contrast Ratio	700:1	
	LCD Color	16.2M	
	Pixel Pitch (mm)	0.24(H) x 0.24(V)	
	Viewing Angle (H-V)	160º / 140º	
	Backlight MTBF (Hrs)	50,000	
Motherboard	CPU	6th generation Intel® Core™ i5 and Celeron® ULT processor	
	RAM	1 x 260-pin 2133/1867 MHz single-channel DDR4 SO-DIMMs	
	Ethernet	PCIe GbE by Intel® I211 controller	
Touchscreen		P-CAP / Resistive Touch	
Input Interfaces	I/O Ports & Switch	M12 Type: 1 x 8-pin M12 connector for RS-232 1 x 8-pin M12 connector for RS-232/422/485 1 x 8-pin M12 connector for GbE LAN 2 x 8-pin M12 connector for two USB 2.0 1 x 5-pin M12 connector for DC jack (12V~36V DC)	Standard Type: 1 x DC jack (12V-36V DC) 1 x DC-in terminal block (12V-36V DC) 1 x HDMI 1 x VGA 1 x RS-232 (COM1 RJ-45) 1 x RS-232/422/485 (COM2 RJ-45) 2 x LAN 2 x USB 2.0 2 x USB 3.2 Gen 1 (5Gb/s)
Expansion		1 x Full-size/half-size PCIe Mini card slot (PCIe x1 and USB 2.0 signals)	
Connectivity	Wi-Fi & BT	802.11 a/b/g/n/ac + Bluetooth v4.0	
	RFID	Reserved RFID antenna area (optional)	
Storage		1 x 2.5" HDD bay	
		1 x M.2 (B key 2242 with USB 2.0 and SATA signal)	
Physical	Construction	Aluminum die-casting	
	Mounting	VESA 100mm x 100mm	
	Net/Gross Weight (kg)	4.95 kg / 7.62 kg	5.02 kg / 7.40 kg
	Dimensions (W x L x D) (mm)	316 x 279 x 67	
Environment	Operating Temperature (with air flow)	-20°C ~ 60°C (without heater solution)	
	Storage Temperature	-20°C ~ 70°C	
	IP Level	Full IP65 or Full IP66 (with M12 connectors)	
	Safety	CE / FCC	
Power	Power Requirement	Power 1: 12V ~ 36V (terminal block)	
		Power 2: 12V ~ 36V (DC jack)	

Ordering Information

M12 Type

Part No.	Description
UPC-F12CM-ULT3-C/R/4G-R11	12.1" 600cd/m² XGA fanless ultra panel PC with Intel® 14nm 6th generation mobile Celeron® 3955U (15W) on-board processor (ULT), one 4GB DDR4 RAM, 802.11a/b/g/n/ac Wi-Fi module, resistive touch, M12 I/O, R11
UPC-F12CM-ULT3-C/PC/4G-R11	12.1" 600cd/m² XGA fanless ultra panel PC with Intel® 14nm 6th generation mobile Celeron® 3955U (15W) on-board processor (ULT), one 4GB DDR4 RAM, 802.11a/b/g/n/ac Wi-Fi module, PCAP touch, M12 I/O, R11
UPC-F12CM-ULT3-i5/R/4G-R11	12.1" 600cd/m² XGA fanless ultra panel PC with Intel® 14nm 6th generation mobile Core™ i5-6300U (15W) on-board processor (ULT), one 4GB DDR4 RAM, 802.11a/b/g/n/ac Wi-Fi module, resistive touch, M12 I/O, R11
UPC-F12CM-ULT3-i5/PC/4G-R11	12.1" 600cd/m² XGA fanless ultra panel PC with Intel® 14nm 6th generation mobile Core™ i5-6300U (15W) on-board processor (ULT), one 4GB DDR4 RAM, 802.11a/b/g/n/ac Wi-Fi module, PCAP touch, M12 I/O, R11

Standard Type

Part No.	Description
UPC-F12C-ULT3-C/R/4G-R11	12.1" 600cd/m² XGA fanless ultra panel PC with Intel® 14nm 6th generation mobile Celeron® 3955U (15W) on-board processor (ULT), one 4GB DDR4 RAM, 802.11a/b/g/n/ac Wi-Fi module, resistive touch, R11
UPC-F12C-ULT3-C/PC/4G-R11	12.1" 600cd/m² XGA fanless ultra panel PC with Intel® 14nm 6th generation mobile Celeron® 3955U (15W) on-board processor (ULT), one 4GB DDR4 RAM, 802.11a/b/g/n/ac Wi-Fi module, PCAP touch, R11
UPC-F12C-ULT3-i5/R/4G-R11	12.1" 600cd/m² XGA fanless ultra panel PC with Intel® 14nm 6th generation mobile Core™ i5-6300U (15W) on-board processor (ULT), one 4GB DDR4 RAM, 802.11a/b/g/n/ac Wi-Fi module, resistive touch, R11
UPC-F12C-ULT3-i5/PC/4G-R11	12.1" 600cd/m² XGA fanless ultra panel PC with Intel® 14nm 6th generation mobile Core™ i5-6300U (15W) on-board processor (ULT), one 4GB DDR4 RAM, 802.11a/b/g/n/ac Wi-Fi module, PCAP touch, R11

Optional

Item	Description
63040-010060-110-RS	Power Adapter (for standard only)
63040-030080-000-RS	Water-proof Power Adapter (for M12 only)
CB-M12USB02-R20	USB Cable (for M12 only)
CB-M12RJ45-R20	LAN Cable (for M12 only)
CB-M12COM-R20	COM Port Cable (for M12 only)
Arm	ARM-11-RS
Stand	STAND-A12-RS STAND-C12-R10
MIFARE RFID Kit	UPC-F-MF-RFID-KIT01-R10 (ATO only)



USB cable
(CB-M12USB02-R20)



RJ-45 LAN cable
(CB-M12RJ45-R10)



DB-9 COM port Cable
(CB-M12COM-R20)



Water-proof Power Adapter
(63040-030080-000-RS)

Packing List

Item	Q'ty	Remark
Touch Pen	1	Resistive type only
Ferrite core	2	
D-Sub to RJ45 cable	2	for standard only
Waterproof plugs: Φ3	10	Φ3x2, Φ4x1, Φ5x1, cover x 6 (for standard only)
M12 to USB cable	1	for M12 only

I/O Interface

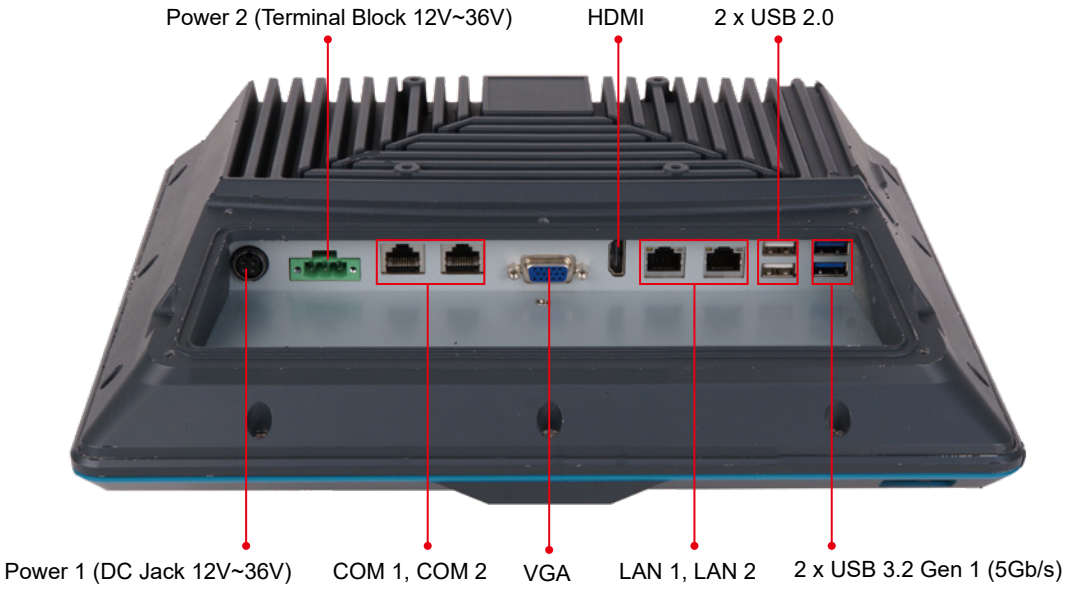



Standard IO cover



M12 IO cover

UPC-F12C Dimensions (Unit: mm)

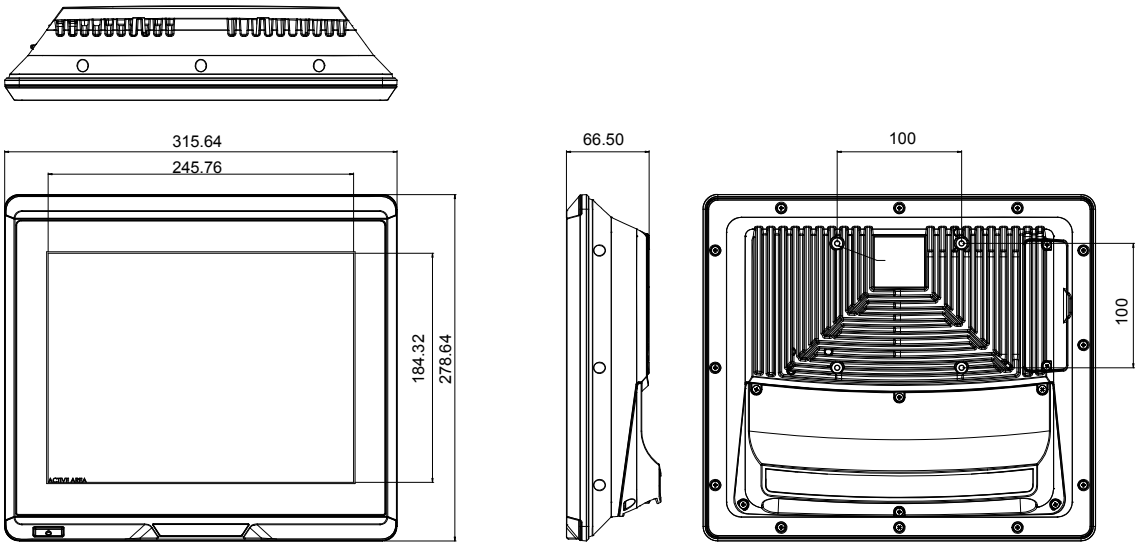

Waterproof Certification Laboratory

IEI follows standard testing procedures (UL 50) to design ruggedized LCD products with high reliability. We mainly provide IP 64, IP 65 and the latest IP 67 specifications in various dust and water resistant mechanical designs, ideal for outdoor and harsh environment applications.



IEI's LCD products are front sealed and tested in the certified house chamber under UL's Witnessed Test Data Program (WTDP).



IP 66 / UL 50



IP 64



IP 65

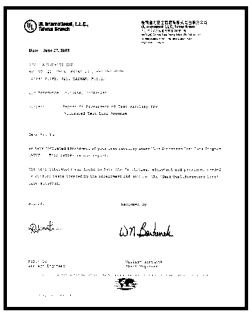

UL 50 Certificate
Chamber strickly approved by Underwriters Laboratories Inc.
IEI's in-house water resistance chamber is approved by the UL organization commonly recognized in North America.



IP 69K

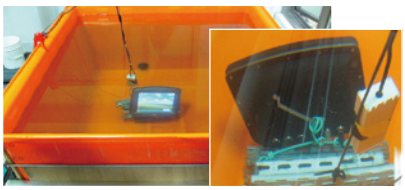

IP 67

The IP Code defined in international standard IEC 60529 classifies the degrees of protection provided against the intrusion of solid objects, dust, accidental contact, and water in electrical enclosures. It consists of the letters IP followed by two digits and an optional letter. The digits indicate conformity with the conditions summarized in the tables below.

First digit

The first digit indicates the level of protection that the enclosure provides against access to hazardous parts

Level		Object size protected against	Effective against
0		-	No protection against contact and ingress of objects
1	Ø50mm	>50 mm	Any large surface of the body, such as the back of a hand, but no protection against deliberate contact with a body part
2	Ø12.5mm	>12.5 mm	Fingers or similar objects
3	2.5mm	>2.5 mm	Tools, thick wires, etc.
4	1mm	>1 mm	Most wires, screws, etc.
5		dust protected	Ingress of dust is not entirely prevented, but it must not enter in sufficient quantity to interfere with the satisfactory operation of the equipment; complete protection against contact
6		dust tight	No ingress of dust; complete protection against contact

Second digit

Protection of the equipment inside the enclosure against harmful ingress of water.

Level		Protected against	Details
0	-	not protected	—
1		dripping water	Dripping water (vertically falling drops) shall have no harmful effect
2		dripping water when tilted up to 15°	Vertically dripping water shall have no harmful effect when the enclosure is tilted at an angle up to 15° from its normal position
3		spraying water	Water falling as a spray at any angle up to 60° from the vertical shall have no harmful effect
4		splashing water	Water splashing against the enclosure from any direction shall have no harmful effect
5		water jets	Water projected by a nozzle against enclosure from any direction shall have no harmful effects
6		powerful water jets	Water projected in powerful jets against the enclosure from any direction shall have no harmful effects
7		immersion up to 1 m	Ingress of water in harmful quantity shall not be possible when the enclosure is immersed in water under defined conditions of pressure and time (up to 1 m of submersion)
8		immersion beyond 1 m	The equipment is suitable for continuous immersion in water under conditions which shall be specified by the manufacturer
9K	90° 60° 0°	Powerful high temperature water jets	Protected against close-range high pressure, high temperature spray downs.Test duration: 30 seconds in each of 4 angles,Water temperature: 80°C

RISC Based Panel PC Solution



The IOVU RISC Based PC Series enables the great embedded flexibility for smart factory, building automation, factory control, and medical usage applications. Making use of the low power consumption RISC platform, the IOVU series adopts a fan-less and power efficient design, providing a cost-effective, stable, and easy to use solution to collect, transfer, process, access , and manage data.

Power over Ethernet supported

Both of data transfer and power supply through one single LAN cable.

- Simplify the construction.
- Dual power input design.

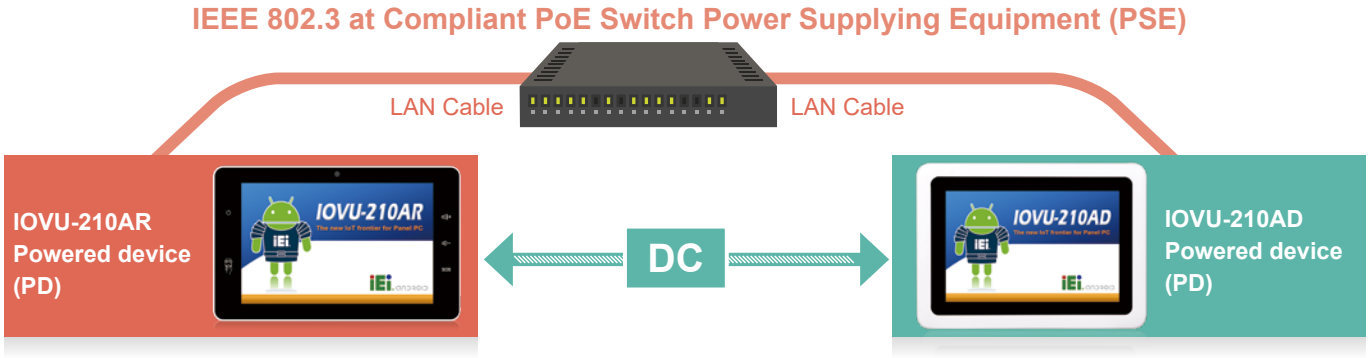

* When both DC-in and PoE are connected to the device, the connection with higher voltage will be the main power source.

RockChip RK3399 Processor

- Dual-core Cortex-A72 up to 1.8GHz + Quad-core Cortex-A53 up to 1.5GHz)
- Mali-T864 GPU (45% more than Mali-T628)
- 4K UHD H265/H264/VP9
- Dual USB Type-C and USB 2.0
- HDMI 2.0a with HDCP 2.2



Powerful, but low energy

Normally, the CPU will run A53 for low power consumption. If the application needs more computing power, A72 CPU will increase performance by 50%.

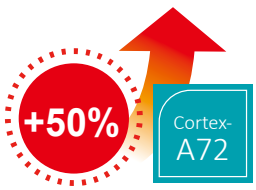

+50% performance than Cortex-A57

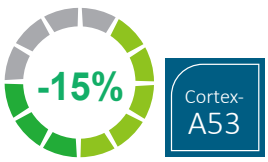

-15% power consumption than Cortex-A57

+45% performance than Mali-T628

RK3399 has more powerful GPU and supports 4K resolution video decode.



Mali-T860 MP4



VP9,10-bits H.265/ H.264 60fps

Supported OS

IEI products with RK3399 family CPU support dual OS with full API/SDK, making it easy to develop your own application on Android or Linux environment.

- Android 7.1
- Linux QT 5.9.4



Applications for RK3399

RK3399 has features of high performance, high expansion, all-round application and it will empower AI and assist the layout of industry products.


Digital Signage


KIOSK


POS

RISC Based Panel PC Selection Guide





		IOVU-210AD-RK39-R10-TW	IOVU-207AR-RK39-R10-TW	IOVU-210AR-RK39-R10-TW
Chassis	Color	white		
	Dimensions (WxHxD)	293 x 209.5 x 44.5 (mm)	210.7 x 154.7 x 29.6 (mm)	282.5 x 174.3 x 26.8 (mm)
	System Fan	Fanless		
	Chassis Construction	PC + ABS plastic front, Metal rear	PC + ABS plastic front, Metal rear	PC + ABS plastic
Display	Size	10"	7"	10"
	Resolution	800(RGB) x 1280	720 RGB x 1280	800(RGB) x 1280
	Brightness (cd/m²)	350 cd/m² (typ.)	300 cd/m² (typ.)	350 cd/m² (typ.)
	Pixel Pitch (mm)	0.0564(H) x 0.1692(V)	0.1239 (H) ×0.119 (V)	0.0564(H) x 0.1692(V)
	Viewing Angle (H/V)	85/85/85/85 Deg.	70/70/70/70 Deg.	85/85/85/85 Deg.
	Touchscreen	Projected capacitive		
Motherboard	CPU	Rockchip RK3399 (Dual-core Cortex-A72 up to 1.8GHz + Quad-core Cortex-A53 up to 1.5GHz)		
	System Memory	On-board 2 GB LPDDR3-1866		
Storage	SD Card	1 x Micro SD Slot		
	Flash	On-board 16 GB eMMC		
Communication	WLAN	On-board Wi-Fi 802.11a/b/g/n/ac (2T2R)		
	Bluetooth	Bluetooth 4.1		
	RFID	13.56 MHz ISO4443 A/B, read-write capable (NXP PN553)	N/A	13.56 MHz ISO4443 A/B, read-write capable (NXP PN553)
I/O Interfaces	I/O interface	1 x 10/100/1000Mbps RJ45 LAN w/ POE 1 x RS-232/422/485 1 x RS-232 1 x DIO 4pin (2 in / 2 out) 1 x DC jack 1 x DC in terminal block	1 x 10/100/1000Mbps RJ45 LAN 2 pin terminal block for SOS key 1 x DC jack	1 x RS-232 (4 pin wafer connector) 1 x RS-232/422/485 (4 pin terminal block) 1 x 4 bit (2 in, 2 out) - (terminal block) 2 x 2 bit (1 in, 1 out) - (4 pin wafer connector) 3 x I²C (4 pin wafer connector) 1 x 10/100/1000Mbps RJ45 LAN w/ POE 1 x 10/100/1000Mbps RJ45 LAN 1 x DC jack
	USB 3.2 Gen 1	1 x Type A 1 x Type C OTG	1 x Type A	1 x Type A
	USB 2.0	2 x Type A	1 x Type A	1 x Type A
	Others	2 x USB 2.0 (internal)	1 x Type C OTG (Internal) 2 x UART w/ 3V (internal) 2 x USB 2.0 (internal)	1 x Type C OTG (Internal) 2 x UART w/ 3V (internal) 2 x USB 2.0 (internal)
Multimedia	Speaker / Mic	2 x Mic 1 x 2W speaker	1 x Mic 1 x 2W Speake	1 x Mic 2 x 1.5W Speaker
	Camera	5-megapixel	5-megapixel	5-megapixel
LED Indicator & Button	Indicator	1 x Power LED 1 x WiFi LED 1 x BT LED	1 x Power (green) 1 x Mail (blue) 1 x Phone (green) 1 x Exclamation Mark (red)	1 x Power LED 1 x RFID LED 3 x Key pad LED (Volume / SOS)
	Button	1 x Reset Button	1 x Reset Button 1 x SOS Key (with red bar) 2 x Function Key for AP operation (with green bar)	1 x Reset Button 1 x Volume up 1 x Volume down 1 x SOS Button
Power	Power Input	12V DC input (range : 9V ~ 30V) PoE: IEEE 802.3 at standard (Power Device)	12V DC input (range : 9V ~ 30V)	12V DC input (range : 9V ~ 30V) PoE: IEEE 802.3 at standard (Power Device)
	Consumption	12V @ 1.2A	12V @ 1.05A	12V @ 1.1A
Reliability	Mounting	VESA Mount 75mmx75mm	VESA Mount 75mmx75mm	Panel mount, In wall cage VESA 110mmx100mm
	Operating Temperature	-10°C ~ 50°C with air flow		
	Storage Temperature	-20°C ~ 60°C		
	Humidity	10% ~ 90%, non-condensing		
	Safety/EMC	CE/FCC / Class A compliant	CE/FCC / Class B compliant	CE/FCC / Class B compliant
OS	Supported OS	Android 7.1	Android 7.1 / Linux	Android 7.1 / Linux

IOVU-207AR-RK39

7” RISC-based Panel PC



Features

- CPU: Rockchip RK3399 (Dual-core Cortex-A72 up to 1.8GHz + Quad-core Cortex-A53 up to 1.5GHz)
- Boot Flash: 16G eMMC Nand Flash
- RAM: 2GB LPDDR3-1866
- OS: Android 7.1 / Linux
- 1 x SOS Key (with red bar):
  Press for calling help in case emergency
  2 x Function Keys (with green bar):
  Default hot key by AP programming

IOVU

Fanless | Wireless 802.11b/g/n | Bluetooth | Touchscreen | Camera | Android | Linux

Specifications

Model		IOVU-207AR-RK39
Chassis	Color	White
	Dimensions (WxHxD) (mm)	210.7 x 154.7 x 29.6
	System Fan	Fanless
	Chassis Construction	PC + ABS plastic front, Metal rear
Display	Size	7"
	Resolution	720 RGB (H) x 1280 (V)
	Brightness (cd/m²)	300 cd/m2 (typ.)
	Contrast Ratio	800:1(typ.)
	Pixel Pitch (mm)	0.1239 (H) ×0.119 (V)
	Viewing Angle (H/V)	70/70/70/70 Deg.
	Touchscreen	Projected capacitive
Motherboard	CPU	Rockchip RK3399 (Dual-core Cortex-A72 up to 1.8GHz + Quad-core Cortex-A53 up to 1.5GHz)
	System Memory	2GB LPDDR3-1866
Storage	SD Card	1 x Micro SD slot
	Flash	16GB eMMC NAND FLASH
Communication	WLAN	802.11 a/b/g/n/ac
	Bluetooth	Bluetooth V4.1
I/O Interfaces	COM port	2 x UART pin header with 3V (internal)
	Ethernet	1 x GbE RJ45 by RTL8211E
	USB 3.2 Gen 1	1 x USB 3.2 Gen 1 (5Gb/s) Type A
	USB 2.0	1 x USB 2.0 Type A 2 x USB 2.0 pin header (internal)
	Others	2 pin terminal block for SOS key
Multimedia	Audio	1 x Speaker (2 W) , 1 x Digital Mic in
	Camera	Front 5-megapixel (CMOS)
LED Indicator & Button	Indicator	1 x Power LED 1 x Mail 1 x Phone 1 x Exclamation Mark
	Button	1 x Reset Button 1 x SOS button (red bar) 2 x Function Key (green bar)
Power	Power Input	DC 9 V~30 V, φ2.5/5.5mm DC Jack
	Power Consumption	12V @ 1.05A
Reliability	Mounting	VESA Mount 75mmx75mm
	Operating Temperature	-10°C ~ 50°C with air flow
	Storage Temperature	-20°C ~ 60°C
	Humidity	10% ~ 90%, non-condensing
	Weight (Net)	0.72 kg
	Safety/EMC	CE/FCC Class B compliant
OS	Supported OS	Android 7.1 / Linux
	Watch dog timer	Yes





Ordering Information

Part No.	Description
IOVU-207AR-RK39-R10-TW	7" TFT-LCD; Rockchip 3399 Processor, 2GB LPDDR3 , 16GB eMMC Flash, Camera, WIFI/BT, Gigabit Ethernet, TW reg, ROHS
IOVU-207AR-RK39-R10-CN	7" TFT-LCD; Rockchip 3399 Processor, 2GB LPDDR3 , 16GB eMMC Flash, Camera, WIFI/BT, Gigabit Ethernet, CN reg, ROHS
IOVU-207AR-RK39-R10-EU	7" TFT-LCD; Rockchip 3399 Processor, 2GB LPDDR3 , 16GB eMMC Flash, Camera, WIFI/BT, Gigabit Ethernet, EU reg, ROHS
IOVU-207AR-RK39-R10-US	7" TFT-LCD; Rockchip 3399 Processor, 2GB LPDDR3 , 16GB eMMC Flash, Camera, WIFI/BT, Gigabit Ethernet, US reg, ROHS

Packing List

1 x IOVU-207AR Device
1 x Wall mount bracket
1 x Screw set

Options

Item	Part No.	Description
Power Adapter	63040-010060-120-RS	Vin:90~264VAC;60W;Φ2.5/Φ5.5/lock

IOVU-207AR-RK39 Dimensions

(Unit: mm)

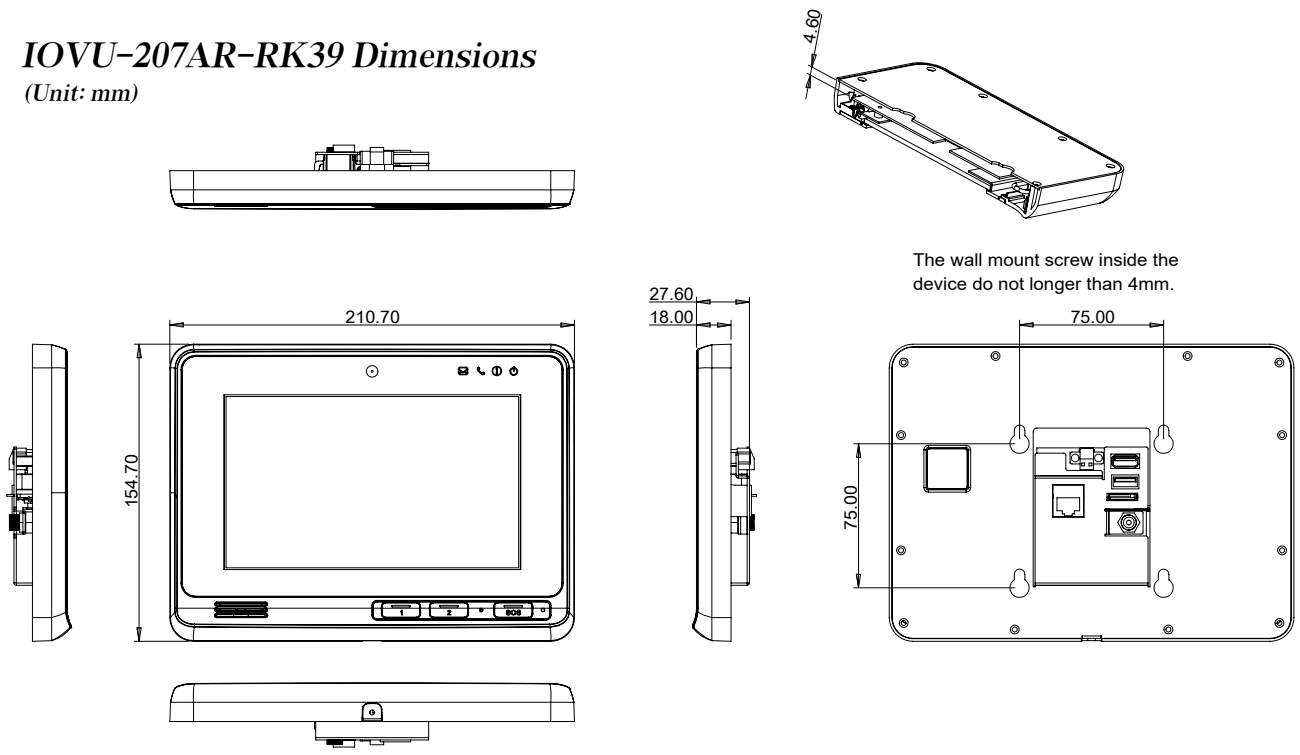

IOVU-207AR-RK39



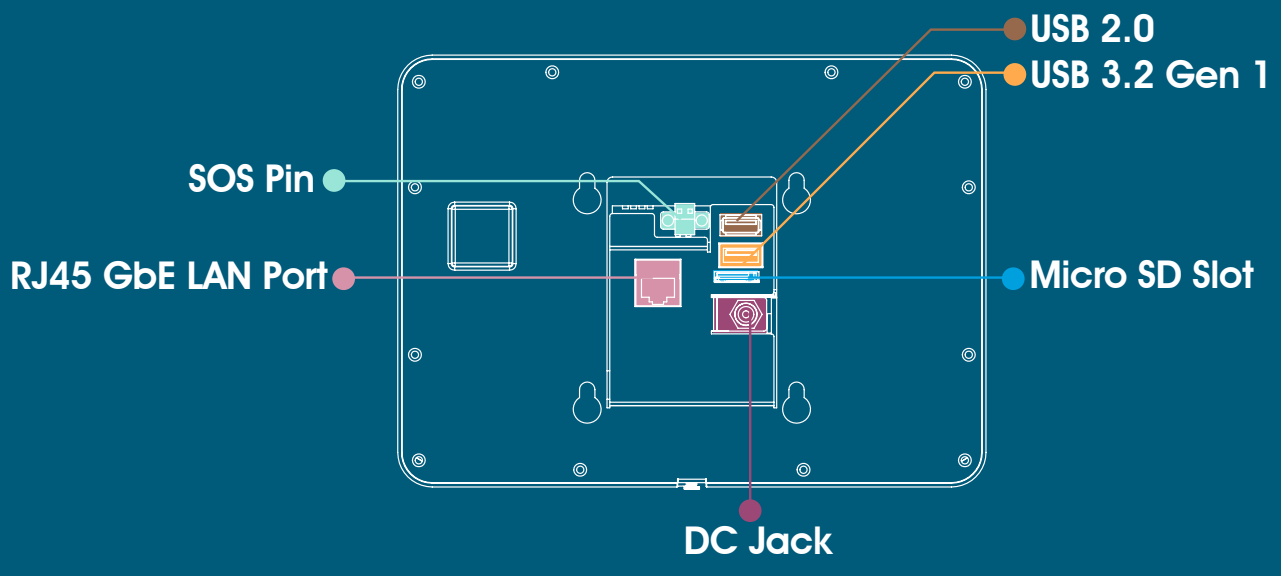

IOVU-210AD-RK39

10.1” RISC Base Panel PC



Features

- 10.1” 1280x800 LCD
- Project Capacitive Touch Screen
- CPU: Rockchip RK3399 (Dual-core Cortex-A72 up to 1.8GHz + Quad-core Cortex-A53 up to 1.5GHz)
- OS: Android 7.1
- Boot Flash: 16GB eMMC Nand Flash
- RAM: 2GB LPDDR3

IOVU

Wireless 802.11b/g/n | Bluetooth | Touchscreen | RFID | RS-232 | Android

Specifications

Model		IOVU-210AD-RK39
Chassis	Color	White
	Dimensions (WxHxD) (mm)	293 x 209.5 x 44.5
	System Fan	Fanless
	Chassis Construction	PC + ABS plastic front, Metal rear
Display	Size	10.1"
	Resolution	800(RGB) x 1280
	Brightness (cd/m²)	350 cd/m² (typ.)
	Contrast Ratio	800:1(typ.)
	Pixel Pitch (mm)	0.0564(H) x 0.1692(V)
	Viewing Angle (H/V)	85/85/85/85 Deg.
	Touchscreen	Project Capacitive
Motherboard	CPU	Rockchip RK3399 (Dual-core Cortex-A72 up to 1.8GHz + Quad-core Cortex-A53 up to 1.5GHz)
	System Memory	2GB LPDDR3-1866
Storage	SD Card	1 x Micro SD slot (Internal)
	Flash	16GB eMMC NAND FLASH
Communication	WLAN	802.11 a/b/g/n/ac
	Bluetooth	Bluetooth V4.1
	RFID	13.56 MHz ISO4443 A/B, read-write capable, ISO 14443A (MIFARE), ISO 14443B (FeliCa)
I/O Interfaces	COM port	1 x RS-232 (DB-9) 1 x RS-232/422/485 (DB-9)
	GPIO	4 bit (2 in, 2 out)
	Ethernet	1 x GbE RJ45 by RTL8211E w/ PoE
	USB 3.2 Gen 1	1 x USB 3.2 Gen 1 (5Gb/s) Type A 1 x USB 3.2 Gen 1 (5Gb/s) Type C OTG
	USB 2.0	2 x USB 2.0 Type A 2 x USB 2.0 pin header (internal)
Multimedia	Audio	1 x Speaker (2 W) , 2 x Digital Mic in
	Camera	Front 5-megapixel (CMOS)
LED Indicator & Button	Indicator	1 x Power, 1 x BT, 1 x Wi-Fi
	Button	1 x Reset Button
Power	Power Input	DC 9 V~30 V * DC input: φ2.5/5.5mm DC Jack or Terminal block * PoE: IEEE 802.3 at standard (Power Device)
	Power Consumption	12V @ 1.2A
Reliability	Mounting	VESA Mount 75mm x 75mm
	Operating Temperature	-10°C ~ 50°C with air flow
	Storage Temperature	-20°C ~ 60°C
	Humidity	10% ~ 90%, non-condensing
	Weight (Net)	1.84 kg
	Safety/EMC	CE/FCC Class A compliant
OS	Supported OS	Android 7.1
	Watch dog timer	Yes

* When both DC-in and PoE are connected to the device, the connection with higher voltage will be the main power source.



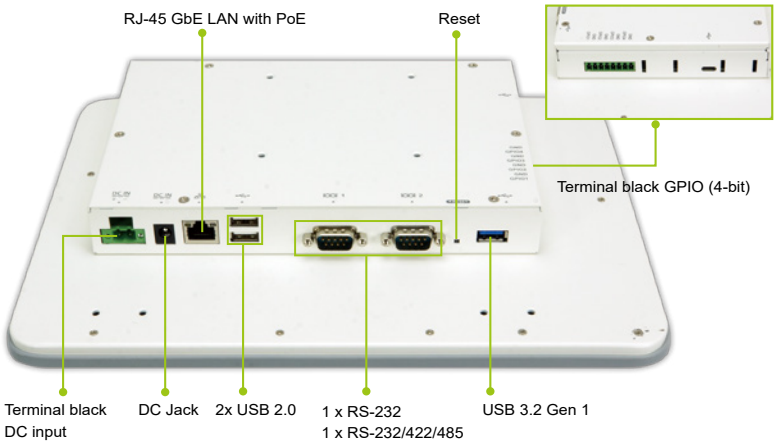

Ordering Information

Part No.	Description
IOVU-210AD-RK39-R11-TW	10.1" TFT-LCD; Rockchip 3399 Processor, 2GB LPDDR3 , 16GB eMMC Flash, WiFi/BT, IEEE 802.3at for POE, phone jack, 4xGPIO, Android 7.1, NFC, TW reg, ROHS
IOVU-210AD-RK39-R11-CN	10.1" TFT-LCD; Rockchip 3399 Processor, 2GB LPDDR3 , 16GB eMMC Flash, WiFi/BT, IEEE 802.3at for POE, phone jack, 4xGPIO, Android 7.1, NFC, CN reg, ROHS
IOVU-210AD-RK39-R11-EU	10.1" TFT-LCD; Rockchip 3399 Processor, 2GB LPDDR3 , 16GB eMMC Flash, WiFi/BT, IEEE 802.3at for POE, phone jack, 4xGPIO, Android 7.1, NFC, EU reg, ROHS
IOVU-210AD-RK39-R11-US	10.1" TFT-LCD; Rockchip 3399 Processor, 2GB LPDDR3 , 16GB eMMC Flash, WiFi/BT, IEEE 802.3at for POE, phone jack, 4xGPIO, Android 7.1, NFC, US reg, ROHS

Packing List

1 x IOVU-210AD Device

Options

Item	Part No.	Description
Power Adapter	63040-010060-120-RS	Vin:90~264VAC;60W;Φ2.5/Φ5.5/lock
ARM	ARM-11-RS	Flat Panel Monitor ARM
Stand	STAND-A12-RS	LCD MONITOR/PPC STAND
Wall Mount Kit	AFLWK-19B	Monitor Wall mounting kit with lock

IOVU-210AD-RK39 Dimensions

(Unit: mm)

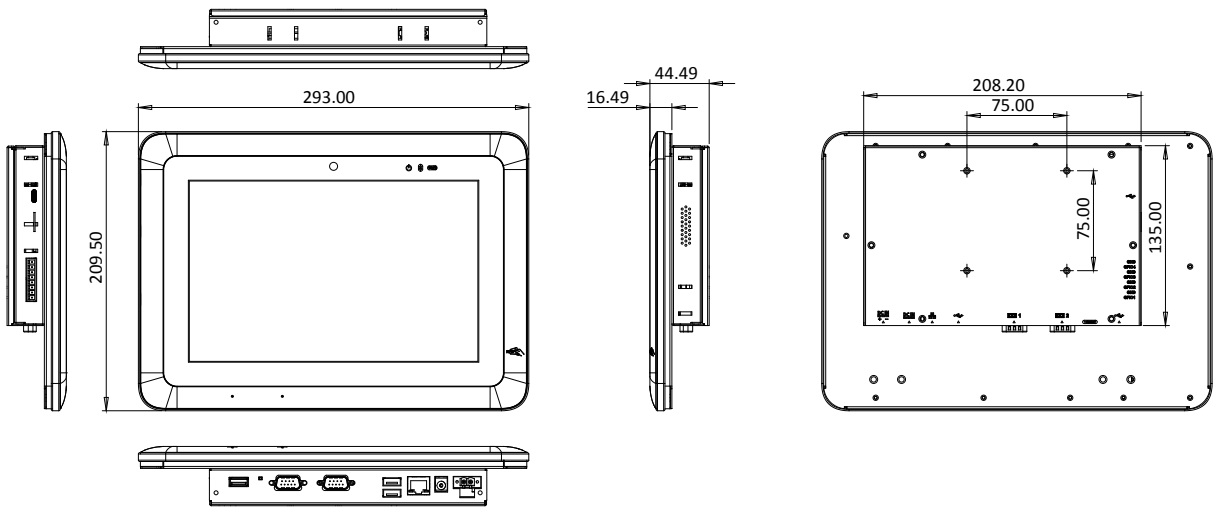

IOVU-210AD-RK39

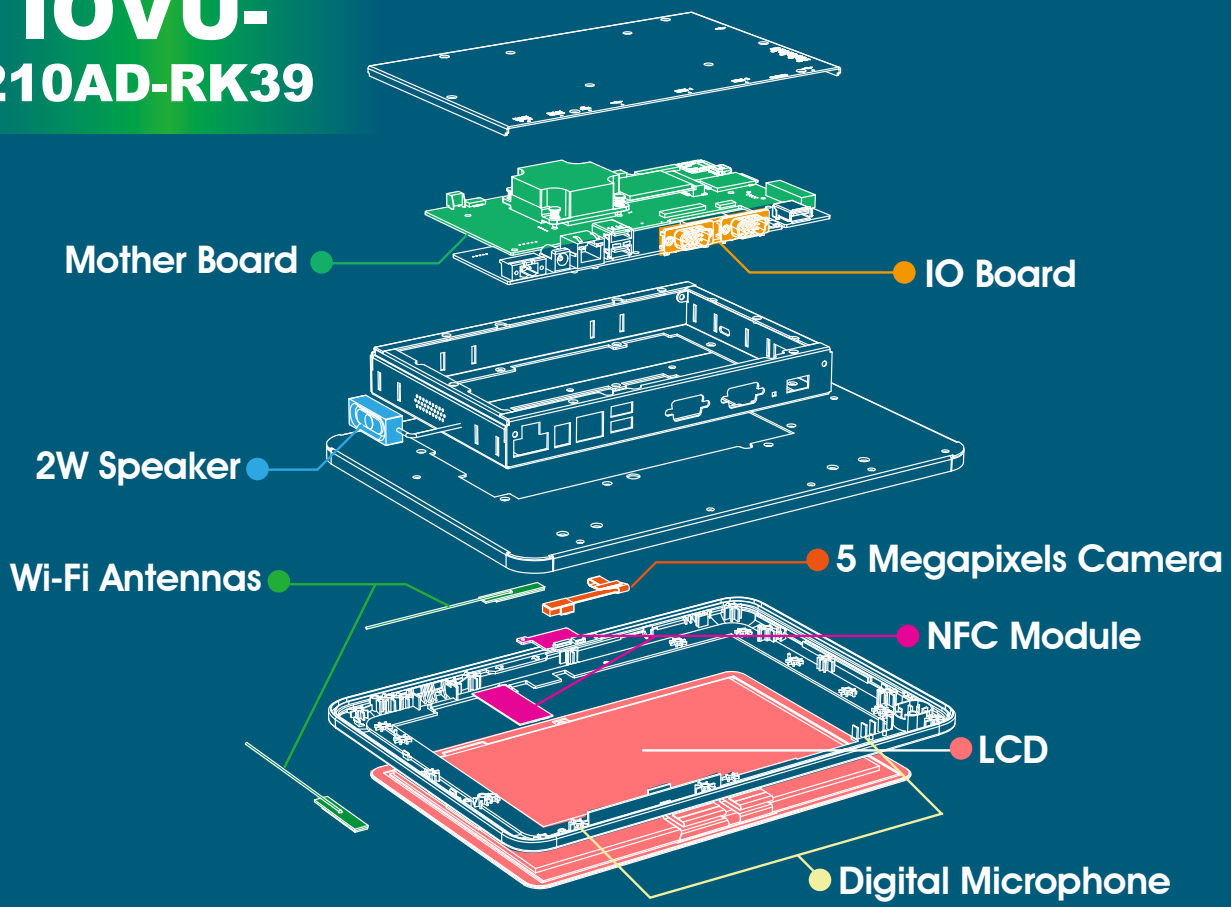

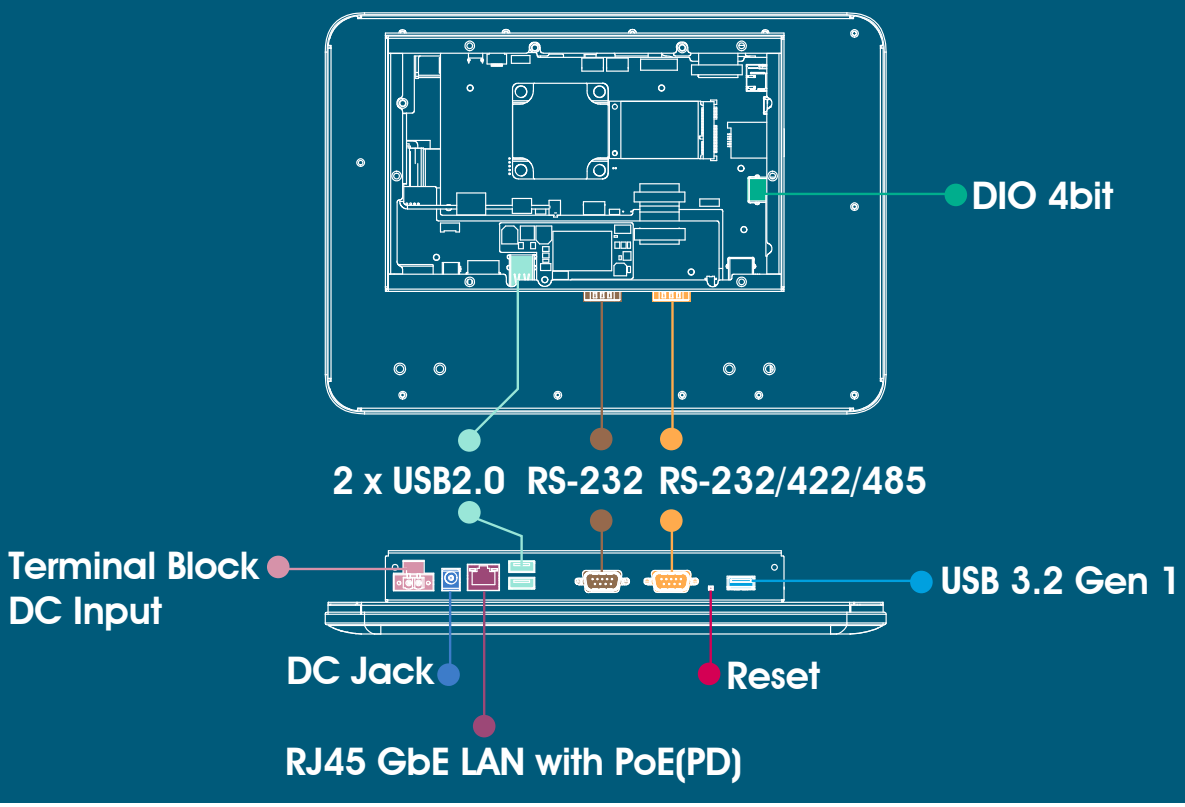

IOVU-210AR-RK39

10.1” RISC-based Panel PC



Features

- 10.1” 1280x800 LCD
- Project Capacitive Touch Screen
- CPU: Rockchip RK3399 (Dual-core Cortex-A72 up to 1.8GHz + Quad-core Cortex-A53 up to 1.5GHz)
- OS: Android 7.1 / Linux
- Boot Flash: 16GB eMMC Nand Flash
- RAM: 2GB LPDDR3-1866
- Grove Interface IOT Sensor connectors

IOVU

Wireless 802.11b/g/n | Bluetooth | Touchscreen | Camera | Dual GbE | Android | Linux

Specifications

Model		IOVU-210AR-RK39
Chassis	Color	White
	Dimensions (WxHxD) (mm)	282.5 x 174.3 x 26.8
	System Fan	Fanless
	Chassis Construction	PC + ABS plastic
Display	Size	10.1"
	Resolution	800(RGB) x 1280
	Brightness (cd/m²)	350 cd/m² (typ.)
	Contrast Ratio	800:1(typ.)
	Pixel Pitch (mm)	0.0564 (H) × RGB × 0.1692 (V)
	Viewing Angle (H/V)	85/85/85/85 Deg.
	Touchscreen	Project Capacitive
Motherboard	CPU	Rockchip RK3399 (Dual-core Cortex-A72 up to 1.8GHz + Quad-core Cortex-A53 up to 1.5GHz)
	System Memory	2GB LPDDR3-1866
Storage	SD Card	1 x Micro SD slot
	Flash	16GB eMMC NAND FLASH
Communication	WLAN	802.11 a/b/g/n/ac
	Bluetooth	Bluetooth V4.1
	RFID	13.56 MHz ISO4443 A/B, read-write capable, ISO 14443A (MIFARE), ISO 14443B (FeliCa)
I/O Interfaces	COM port	1 x RS-232 (4 pin wafer connector) 1 x RS-232/422/485 (4 pin terminal block) 2 x UART pin header with 3V (internal)
	GPIO	1 x 4 bit (2 in, 2 out) 2 x 2 bit (1 in, 1 out)
	Ethernet	1 x GbE RJ45 by RTL8211E with PoE (PD) 1 x GbE RJ45 by RTL8211E
	USB 3.2 Gen 1	1 x USB 3.2 Gen 1 (5Gb/s) Type A
	USB 2.0	1 x USB 2.0 Type A 2 x USB 2.0 pin header (internal)
	Others	3 x I²C sensor connectors (3V)
Multimedia	Audio	2 x Speaker (1.5W), 1 x Digital Mic in
	Camera	Front 5-megapixel (CMOS)
LED Indicator & Button	Indicator	1 x Power LED 1 x RFID LED
	Button	1 x Reset button 2 x Volume key (up / down) on screen 1 x SOS key on screen
Power	Power Input	DC 9 V~30 V * DC input: φ2.5/5.5mm DC Jack * PoE: IEEE 802.3 at standard (Power Device)
	Power Consumption	12V @ 1.1A
Reliability	Mounting	Panel mount, In wall cage
	Operating Temperature	-10°C ~ 50°C with air flow
	Storage Temperature	-20°C ~ 60°C
	Humidity	10% ~ 90%, non-condensing
	Weight (Net)	0.85 kg
	Safety/EMC	CE/FCC Class B compliant
OS	Supported OS	Android 7.1 / Linux
	Watch dog timer	Yes

* When both DC-in and PoE are connected to the device, the connection with higher voltage will be the main power source.

Power over Ethernet supported
Both of data transfer and power supply through one single LAN cable.
- Simplify the construction.
- Dual power input design.

IEEE 802.3 at Compliant PoE Switch Power Supplying Equipment (PSE)

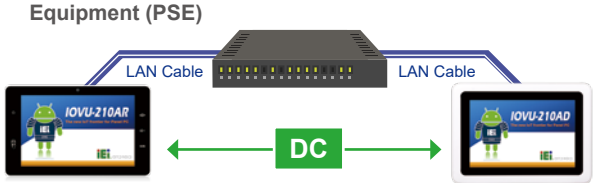

IOVU-210AR
Powered device (PD)

IOVU-210AD
Powered device (PD)

* When both DC-in and PoE are connected to the device, the connection with higher voltage will be the main power source.



Ordering Information

Part No.	Description
IOVU-210AR-RK39-R11-TW	10.1" TFT-LCD; Rockchip 3399 Processor, 2GB LPDDR3 , 16GB eMMC Flash, Camera, WIFI/BT, POE 802.3at, COM port, DIO, 4pin sensor connector, Front Camera, NFC, TW reg, ROHS
IOVU-210AR-RK39-R11-CN	10.1" TFT-LCD; Rockchip 3399 Processor, 2GB LPDDR3 , 16GB eMMC Flash, Camera, WIFI/BT, POE 802.3at, COM port, DIO, 4pin sensor connector, Front Camera, NFC, CN reg, ROHS
IOVU-210AR-RK39-R11-EU	10.1" TFT-LCD; Rockchip 3399 Processor, 2GB LPDDR3 , 16GB eMMC Flash, Camera, WIFI/BT, POE 802.3at, COM port, DIO, 4pin sensor connector, Front Camera, NFC, EU reg, ROHS
IOVU-210AR-RK39-R11-US	10.1" TFT-LCD; Rockchip 3399 Processor, 2GB LPDDR3 , 16GB eMMC Flash, Camera, WIFI/BT, POE 802.3at, COM port, DIO, 4pin sensor connector, Front Camera, NFC, US reg, ROHS

Packing List

1 x IOVU-210AR Device
1 x Wall mount bracket
1 x Screw set

Options

Item	Part No.	Description
Power Adapter	63040-010060-120-RS	Vin:90~264VAC;60W;Φ2.5/Φ5.5/lock
In Wall Cage	41320-0490E4-00-RS	In wall bracket for IOVU-210AR

IOVU-210AR-RK39 Dimensions

(Unit: mm)

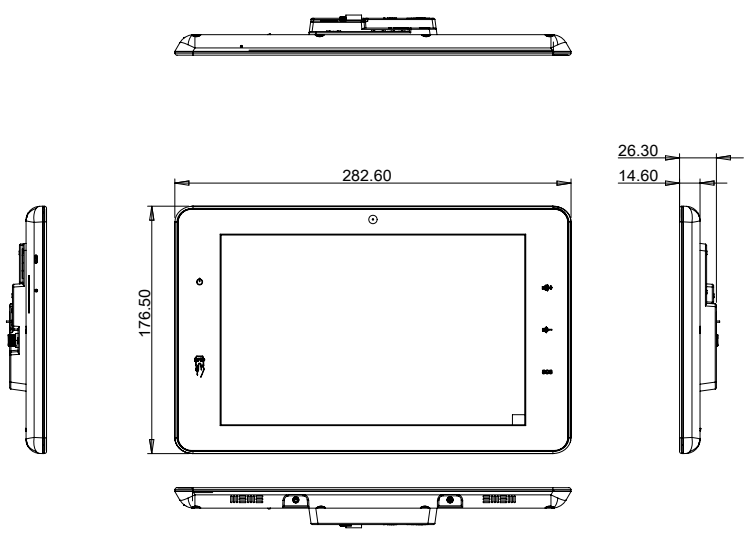

The wall mount screw inside the device do not over 3mm.

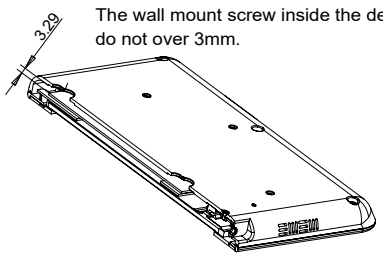

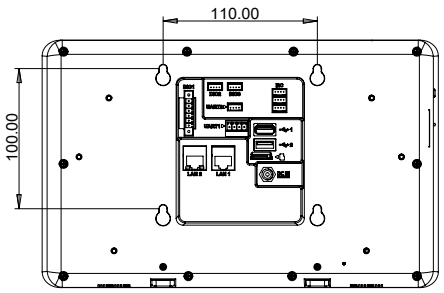

IOVU-210AR-RK39

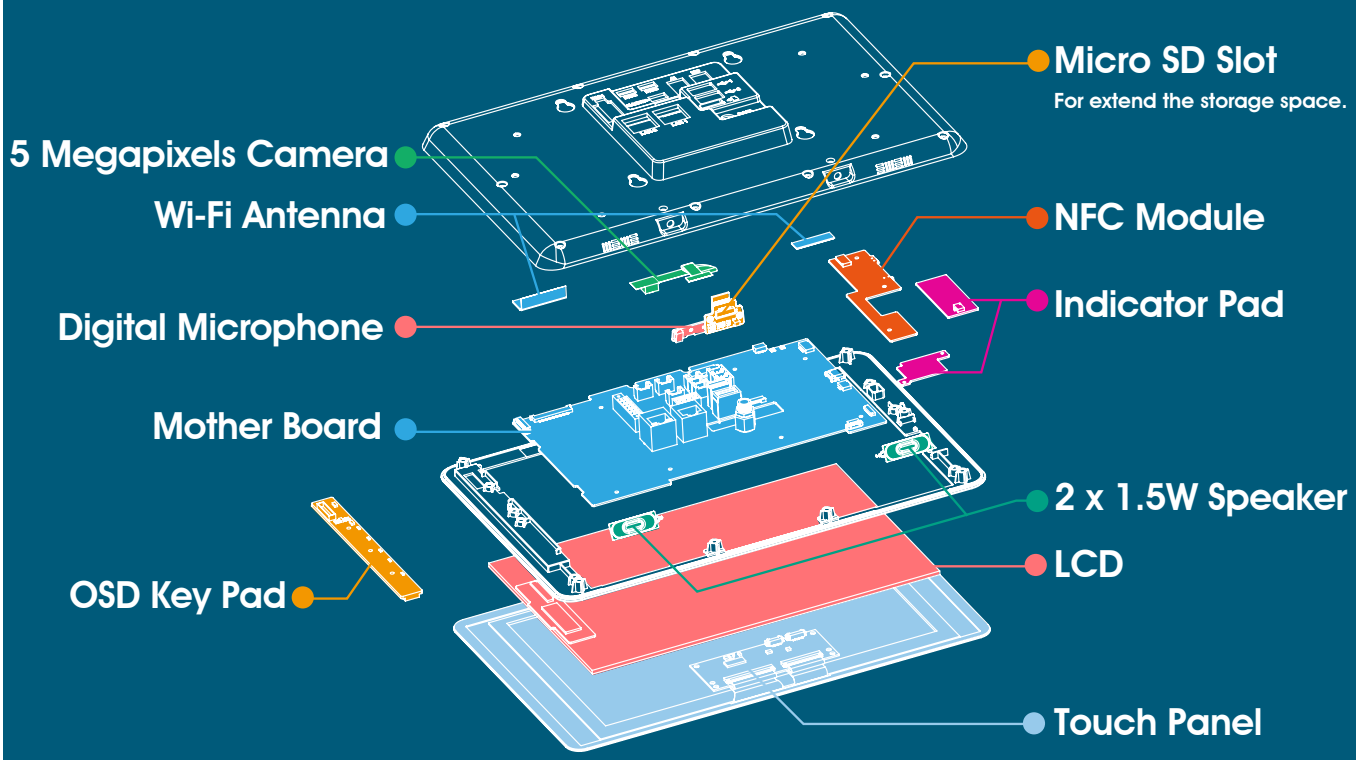

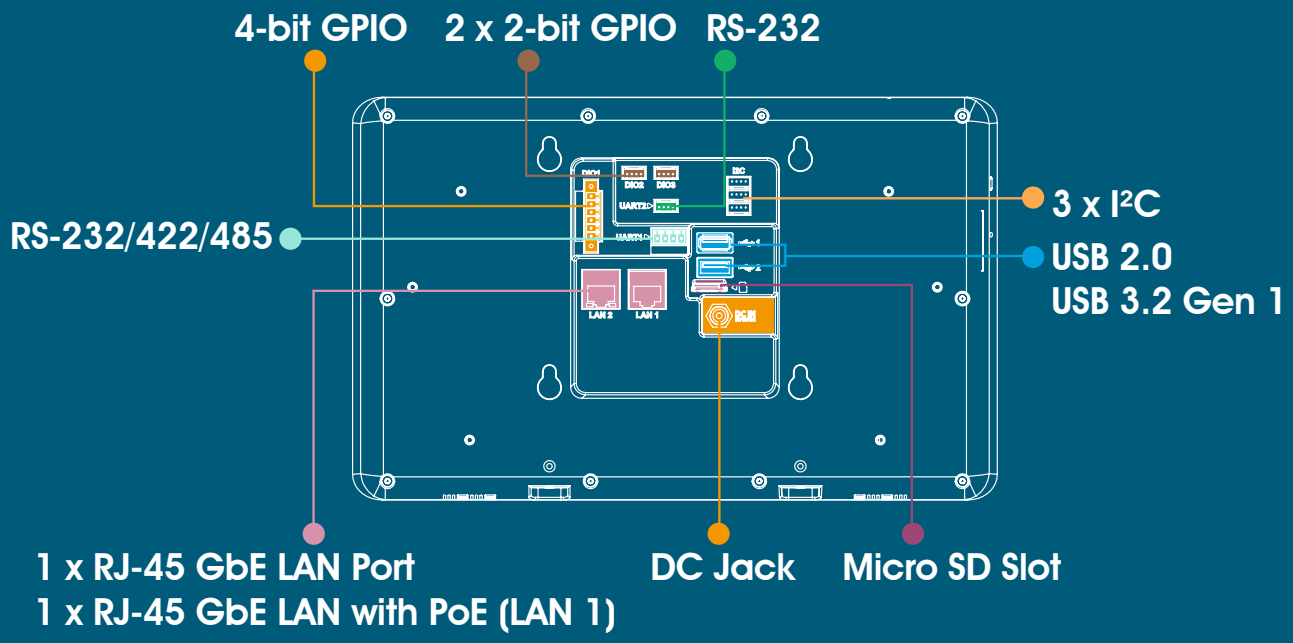

Industrial Monitor Solution



Durable waterproof displays are essential in today's commercial and industrial applications. IEI's versatile lines of flat-bezel IP 65 compliant industrial displays with shock and vibration resistance are designed specifically to endure the rigorous demands of modern commerce and industrial environments. These displays are easily integrated into automation applications, ATM machines and human machine interfaces.





Display Monitor

DM-F Series

- IP65 flat-bezel
- Resistive touch window: 6H anti-scratch PCAP multi-touch
- HDMI/DP high definition audio/video interface
- 9~36V wide range DC input
- Anti-glare and UV-resistant Touch Screen

Maritime Monitor

SxxM Series

- IP66 flat-bezel
- PCAP multi-touch
- DVI/VGA/BNC output and BNC input
- Redundant power : AC and 18-36V DC
- 0%~100% dimmable LCD backlight
- Remote OSD control by serial port or LAN port
- Duplicate daisy chain monitor connection by VGA port

Product Line	DM-F Series	SxxM series
LCD Size	6.5" ~ 24"	19" / 24"
Input Signal Interface	6.5"/ 8": VGA+DVI-D 12.1" ~ 24": VGA+HDMI+DisplayPort	2 x VGA, 2 x DVI 1 x BNC input, 1 x BNC output
Brightness (cd/m²)	250 ~ 800	300
Operating Temperature	-20°C ~ 60°C	-15°C ~ 55°C
OSD Function	Yes	Yes
IEI samrtOSD Support	Yes	-
Front Panel Protection	IP 65	IP 66

Industrial Monitor Redefine

Anti-glare and UV-resistant Touch Screen Ideal for Outdoor Applications

Etching anti-glare, never peel off!

The PPC-FxxC series is built with anti-glare touch screen, which has lower reflection compared to normal touch screen. The reflection will reduce from 8% to 1% and it will eliminate the interference of shine and lights on displays and improve the screen clarity.



UV-resistant ensures reliable continuous operation for mission critical applications

Outdoor applications exposing to direct sunlight and long-term ultraviolet (UV) light will affect PCAP panel appearance such as PCAP top glass hard coat cracking and hazing, or varying degrees of yellowing and bubbling. Thus, IEI offers a UV resistant PCAP touch solution to equip outdoor industrial systems exposed to direct long-term sunlight with anti-UV characteristics.

- Blocks UV wavelengths less than ≈340nm
- Meets ASTM G154 performance criteria Cycle 1 for 1000 hours

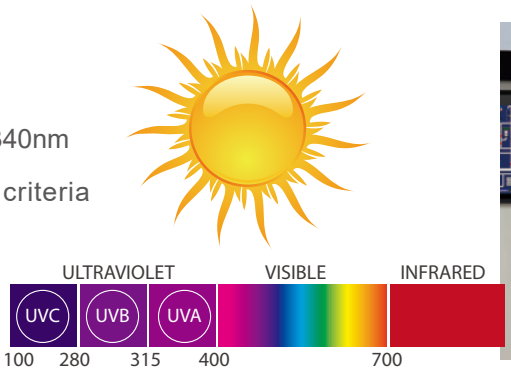



■ Flexible Video Input Selection

DM-F provides comprehensive video input from conventional analog VGA to broad bandwidth digital HDMI and DisplayPort to fulfill different needs.

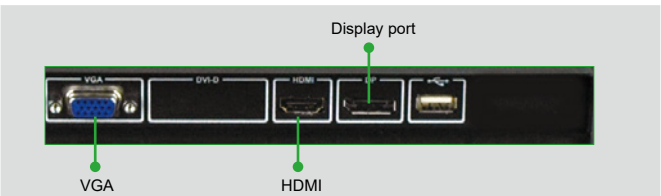

Benefits of HDMI

- Single-link bandwidth to 340 MHz (10.2 Gbit/s)
- Blu-ray disc content support
- Downward convertible for DVI

Benefits of DisplayPort

- 17.28 Gbit/s broad bandwidth for faster transmission
- 15M for 1080p 60fps long transmission distance
- Blu-ray disc content support
- Lockable cables against vibration
- Downward convertible for HDMi and DVI


Lockable

■ 9V~36V Wide Range DC Input

Power requirement varies from applications. DM-F series provides 9V~36V DC input which simplifies system integration through adapter or DC source.

Supports Mobile Application

Display Monitor series M models support wide 9V~36V DC power input. Factory and mobile environments, such as vehicles, usually use 12V or 24V DC power source. The wide 9V~36V power input range by terminal block and 12V power input by power jack can be adapted to a wide variety of appliance requirements.



■ Dual Touch Screen Control Interface: RS-232 & USB

Display monitor series provides both RS-232 and USB ports for touch screen connection.

- Lockable RS-232 connector ensures secure attachment (Optional)
- Standard Type A USB 2.0 interface with 480 Mbit/s maximum transfer rate provides faster data transmission than a traditional RS-232 interface

■ IP 65 Waterproof Aluminum Front Panel

IP 65 is the highest dust, water and oil proof standard in ground usage, It absolutely prevents any micro-particles from getting into the system front panel and allows the system to function in harsh environments.



■ Wide Operating Temperature

Design for outdoor applications, DM-F series support wide operating temperature from -20°C ~ 60°C for 12" to 17" models. 22" and 24" are by project request.

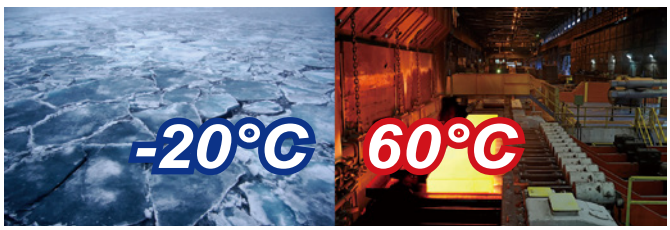

■ Gamma Correction - Pursuit of Perfection

Gamma correction enables each panel model to follow the specified look-up-table (LUT) in gamma curve doing color adjustment through software encode. In this way, various monitors can display in an unified color by following Gamma 2.2 standard for PC products, ensuring color consistency for multiple monitor applications.

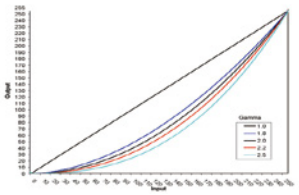

■ Cable Cover for Neat Cabling

The DM-F series provides an optional cable cover for easy and neat cabling.





On Screen Display (OSD)

■ OSD Keypad on Back

In order to keep the front panel simple and clean, the membrane keypad of the DM-F series is located on the rear panel to prevent the possibility to adjust the setting accidentally.



■ SmartOSD

- 100% compatible with Windows environment -Windows 95/NT 4.0/98/2000/2003/XP/Vista
- Normal video cable (VGA/DVI) connection only
- Overcome operation obstacles

Distance, location and multiple display units no longer present obstacles when controlling the monitors with the SmartOSD.

■ IEI SmartOSD Software OSD for IEI LCD Monitors

IEI SmartOSD is a proprietary On-Screen-Display (OSD) software solution that enables easy remote monitor setting adjustments in Windows environment. IEI SmartOSD delivers excellent performance and provides more flexibility than typical OSD hardware solutions when adjusting a monitor. SmartOSD also allows monitor settings such as brightness, contrast, screen position, size, and color gain to be read and changed over normal video cable (VGA/DVI by project base).

■ 100% Compatible with VESA DDC / CI Protocol

IEI LCD monitors are implemented with the VESA DDC/CI protocol and standard VESA Monitor Control Command Set (MCCS). Compliance software for designing displays compatible with VESA's DDC/CI and MCCS standards are easily modified and applied in other application programs.

Various Remote Management Functions

1.EDID

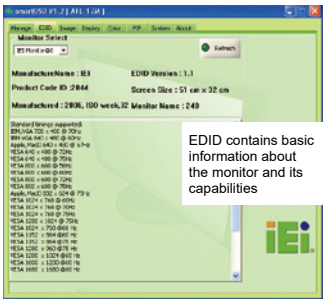

2.Image Setting



3.Display Setting



4.Color Setting



5. Picture in Picture Setting

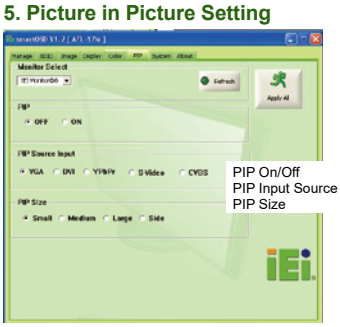

6. System Setting

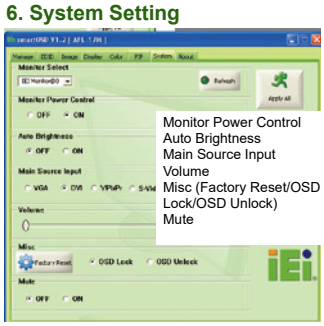

7.Monitor Power Management and File Saving

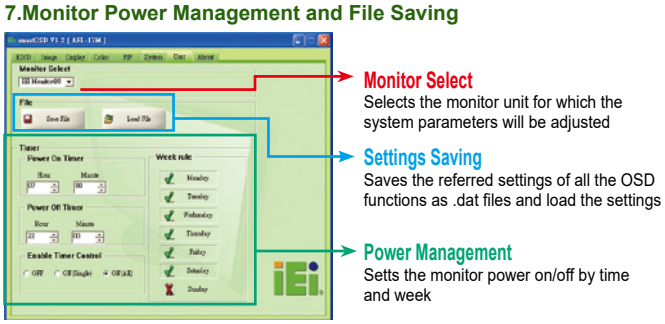

Heavy Industrial Monitor

6.5”~15.6” DM-F IP65 Industrial Monitor

Features

- Robust IP65 aluminum front bezel
- Aesthetic ultra-thin bezel for seamless panel mount installation
- DC input
- DVI / VGA flexible video input solution
- Resistive single touch
- Wide temperature support





Specifications

Model		DM-F65A	DM-F08A	DM-F12A	DM-F15A	DM-FW15A
LCD	LCD Display	6.5” (4:3)	8” (4:3)	12.1" (4:3)	15" (4:3)	15.6" (16:9)
	Max. Resolution	640 (W) x 480 (H)	800 x 600	1024 (W) x 768 (H)	1024 (W) x 768 (H)	1366 (W) x768 (H)
	Brightness (cd/m²)	800	500	600	450	400
	Contrast Ratio	600:1	500:1	700 : 1	800 : 1	500:1
	LCD Color	16.2M	262K	16.2M	16.2M	16.2M
	Pixel Pitch (mm)	0.207 x 0.207	0.0675 x 0.2025	0.24 x 0.24	0.29 x 0.29	0.252 x 0.252
	Viewing Angle (H-V)	160° / 140°	140°/120°	160° /140°	160° / 150°	170° / 160°
	Backlight MTBF (Hrs)	50000	50000	50000	70000	50000
Touchscreen & Controller		5-wire resistive single touch window/ Penmount 6000		5-wire resistive single touch window/ Penmount 6000 (Anti-glare Surface) 10-point Projected capacitive touch window, 6H/EETI EXC3188 (Anti-UV, Anti-glare Surface)		
I/O Ports		1 x VGA (DB-15) 1 x DVI 1 x USB 2.0 (touch) 1 x RS-232 (reserved for resistive touch ATO) 1 x Lockable 12V DC jack		1 x VGA (DB-15) 1 x HDMI 1 x DisplayPort 1.1 1 x USB 2.0 (touch) 1 x RS-232 (reserved for resistive touch ATO) 1 x Lockable 9V-36V DC jack 1 x 9V-36V terminal block		
OSD	OSD Button	5-key membrane OSD keypad		7-key membrane OSD keypad		
	Smart OSD Software	Smart OSD Software				
Physical	Construction Material	Aluminum front frame and sheet metal rear cover				
	Mounting	Panel Mount/ Rack Mount 75 x 75 VESA Mount		Panel Mount/ Rack Mount 100 x 100 VESA Mount		
	Enclosure Color	Black C				
	Dimensions (mm)	191.8 x 154.36 x 42.88	222.2 x 182.2 x 42.7	262.2 x 322.2 x 40.5	303 x 378.5 x 43.2	400.1 x 253.3 x 52.9
	Cutout Dimensions (mm)	180 x 140	206 x 154	244.8 x 304.8	285.6 x 361.1	379.1 x 232.3
	Weight (kg) Net/ Gross	1.1 / 2.6	1.33 / 4.5	2.7 / 4.9	3.5 / 5.5	4 / 6.5
Environment	Operating Temperature (with air flow)	-20°C ~ 60°C (with air flow)				
	Storage Temperature	-20°C ~ 70°C				
	Humidity	10% to 95% (non-condensing)				
	IP Level	IP 65 compliant front panel				
	Safety and EMC	CE & FCC certified				
Power Input		12V DC		9V~36V DC		
Power consumption		12V @ 0.5A	12V @ 0.5A	9V @ 2.2A 36V @ 0.5A	9V @ 1.6A 36V @ 0.4A	9V @ 1.3 36V @ 0.33

Heavy Industrial Monitor

17”~23.8” DM-F IP65 Industrial Monitor

Features

- Robust IP65 aluminum front bezel
- Aesthetic ultra-thin bezel for seamless panel mount installation
- Wide range 9V~36V DC input
- HDMI / DisplayPort / VGA flexible video input solution
- Projected capacitive multi-touch and resistive single touch options
- Wide temperature support

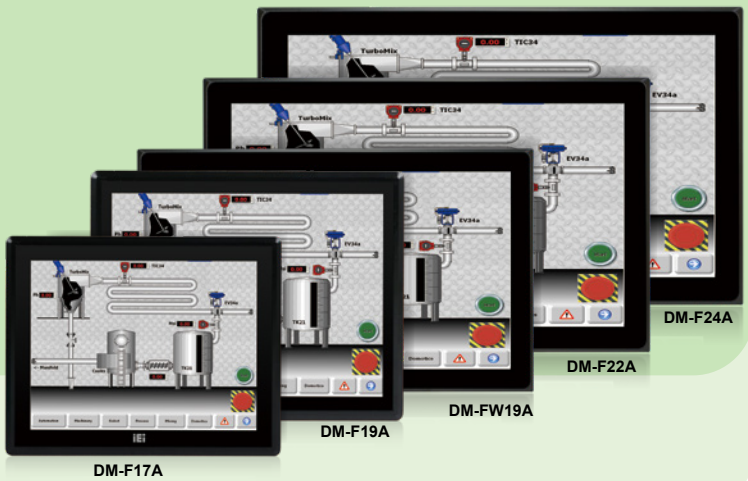



Specifications

Model		DM-F17A	DM-FW19A	DM-F19A	DM-F22A	DM-F24A
LCD	LCD Display	17" (5:4)	18.5" (16:9)	19" (5:4)	21.5" (16:9)	23.8" (16:9)
	Max. Resolution	1280 (W) x 1024 (H)	1366 (W) x 768 (H)	1280 (W) x 1024 (H)	1920 (W) x 1080 (H)	1920 (W) x 1080 (H)
	Brightness (cd/m²)	350	400	350	250	250
	Contrast Ratio	1000 : 1	1000 : 1	1000 : 1	1000 : 1	3000 : 1
	LCD Color	16.7M				
	Pixel Pitch (mm)	0.26 x 0.26	0.3 x 0.3	0.294 x 0.294	0.25 x 0.25	0.28 x 0.28
	Viewing Angle (H-V)	170° / 160°			170° / 160°	178° / 178°
	Backlight MTBF (Hrs)	50000			30000	30000
Touchscreen & Controller		5-wire resistive single touch window, 3H/Penmount 6000 (Anti-glare Surface) 10-point Projected capacitive touch window, 6H/EETI EXC3188 (Anti-UV, Anti-glare Surface)			10-point Projected capacitive touch window, 6H/EETI EXC3188 (Anti-UV, Anti-glare Surface)	
I/O Ports		1 x VGA (DB-15) 1 x DVI (F19A only) 1 x HDMI (F17A & FW19A only) 1 x DisplayPort 1.1 1 x USB 2.0 (touch) 1 x RS-232 (reserved for resistive touch ATO) 1 x Lockable 9V-36V DC jack 1 x 9V-36V terminal block			1 x VGA (DB-15) 1 x HDMI 1 x DisplayPort 1.1 1 x USB 2.0 (touch) 1 x RS-232 (reserved for resistive touch ATO) 1 x Lockable 9V-36V DC jack 1 x 9V-36V terminal block	
OSD	OSD Button	7-key membrane OSD keypad				
	Smart OSD Software	Smart OSD Software				
Physical	Construction Material	Aluminum front frame and sheet metal rear cover				
	Mounting	Panel Mount/ Rack Mount 100 x 100 VESA Mount			Panel Mount 100 x 100 VESA Mount	Panel Mount 100 x 100 VESA Mount
	Enclosure Color	Black C				
	Dimensions (mm)	341.4 x 408.4 x 49.3	468.8 x 288.2 x 48.9	372.4 x 447.4 x 49.57	358.4 x 550.4 x 49.1	382 x 600 x 49.4
	Cutout Dimensions (mm)	324 x 391	447.8 x 267.2	430 x 355	340 x 532	358.6 x 576.6
	Weight (kg) Net/Gross	4.4 / 7.1	5 / 8.1	5.4 /8.4	6.3 / 9.6	7.6 / 10.9
Environment	Operating Temperature (with air flow)	-20°C ~ 60°C (with air flow)			-10°C ~ 50°C	-10°C ~ 50°C
	Storage Temperature	-20°C ~ 70°C	-20°C ~ 70°C	-20°C ~ 70°C	-20°C ~ 60°C	-20°C ~ 60°C
	Humidity	10% to 95% (non-condensing)				
	IP Level	IP 65 compliant front panel				
	Safety and EMC	CE & FCC certified				
Power input		9V~36V DC				
Power consumption		9V @ 2.6A 36V @ 0.6A	9V @ 1.33A 36V @ 0.35A	9V @ 3.3A 36V @ 0.8A	9V @ 2.5A 36V @ 0.6A	9V @ 3.4A 36V @ 0.8A

Ordering Information

Part No.	Description
DM-F65A/R-R10	6.5” 800 cd/m² high-luminance VGA LCD monitor with aluminum die casting front panel, black color, USB resistive touchscreen, R10
DM-F08A/R-R10	8” 500 cd/m² SVGA LCD monitor, Aluminum front panel, Black color, W/ USB resistive touch screen, 12V DC input, R10
DM-F12A/R-R22	12.1” 600 cd/m² XGA LCD monitor, Aluminum die casting front panel, Black color, W/ USB resistive touch screen, 9 ~36V DC input, R22
DM-F12A/PC-R22	12.1” 600 cd/m² XGA LCD monitor, Aluminum die casting front panel, Black color, W/ USB projected capacitive touch screen, 9 ~36V DC input, R22
DM-F15A/R-R30	15” 450 cd/m² XGA LCD monitor, Aluminum die casting front panel, Black color, W/ USB resistive touch screen, 9 ~36V DC input, R30
DM-F15A/PC-R30	15” 450 cd/m² XGA LCD monitor, Aluminum die casting front panel, Black color, W/ USB projected capacitive touch screen, 9 ~36V DC input, R30
DM-FW15A/PC-R10	15.6” 400 cd/m² 1366x768 LCD monitor, Aluminum front panel, Black color, W/ USB PCAP touch screen, 9 ~36V DC input, R10
DM-F17A/R-R20	17” 350 cd/m² SXGA LCD monitor, Aluminum die casting front panel, Black color, W/ USB resistive touch screen, 9 ~36V DC input, R20
DM-F17A/PC-R20	17” 350 cd/m² SXGA LCD monitor, Aluminum die casting front panel, Black color, W/ USB projected capacitive touch screen, 9 ~36V DC input, R20
DM-FW19A/PC-R10	18.5” 400 cd/m² 1366x768 LCD monitor, Aluminum front panel, Black color, W/ USB PCAP touch screen, 9 ~36V DC input, R10
DM-F19A/R-R20	19” 350 cd/m² SXGA LCD monitor, Aluminum die casting front panel, Black color, W/ USB resistive touch screen, 9 ~36V DC input, R20
DM-F19A/PC-R20	19” 350 cd/m² SXGA LCD monitor, Aluminum die casting front panel, Black color, W/ USB projected capacitive touch screen, 9 ~36V DC input, R20
DM-F22A/PC-R22	21.5” 250 cd/m² FHD LCD monitor, Aluminum die casting front panel, Black color, W/ USB projected capacitive touch screen, 9 ~36V DC input, R22
DM-F24A/PC-R31	23.8” 250 cd/m² FHD LCD monitor, Aluminum front panel, Black color, W/ USB projected capacitive touch screen, 9 ~36V DC input, R31

Options

Item	DM-F65A	DM-F08A	DM-F12A	DM-F15A	DM-FW15A	DM-F17A	DM-F19A	DM-FW19A	DM-F22A	DM-F24A
Arm	ARM-11-RS		ARM-11-RS	ARM-31-RS	ARM-31-RS	ARM-31-RS	ARM-31-RS	ARM-31-RS	ARM-31-RS	ARM-31-RS
Stand	STAND-B08		STAND-A12-RS STAND-C12-R10	STAND-A19-RS STAND-C19-R10 STAND-A21-R10						
Wall Mount Kit	AFLWK-12		WK-190MS-R10							
Panel Mount Kit	FPK-07-R10		FPK-01-R10				FPK-02-R10		FPK-02-R10	FPK-03-R10
Rack Mount Kit	FRK65-R10	FRK08-R10	FRK12-R10	FRK15-R10	FRKW15D-R10	FRK17-R10	FRK19D-R10	FRKW19D-R10	N/A	
Cable Cover	N/A		N/A	DM-F-CC01-R10	N/A	DM-F-CC01-R10	DM-F-CC02-R10	N/A	DM-F-CC02-R10	
RS-232 Touch Cable Kit	DM-F-COMKIT-R10		DM-F-COMKIT-R10	DM-F-COMKIT-R10	N/A	DM-F-COMKIT-R10	DM-F-COMKIT01-R10	N/A	N/A	
Power Adapter	N/A		63040-010060-120-RS							

Packing List

Item	P/N	Q'ty	Remark
USB Cable	32001-006100-100-RS	1	For touchscreen
VGA Cable	32000-036200-RS	1	
Power Adapter	63040-010060-120-RS (for DM-F65/08A)		

DM-F65A/08A
Fully Integrated I/O



DM-F12A/F15A/FW15A/F17A
Fully Integrated I/O

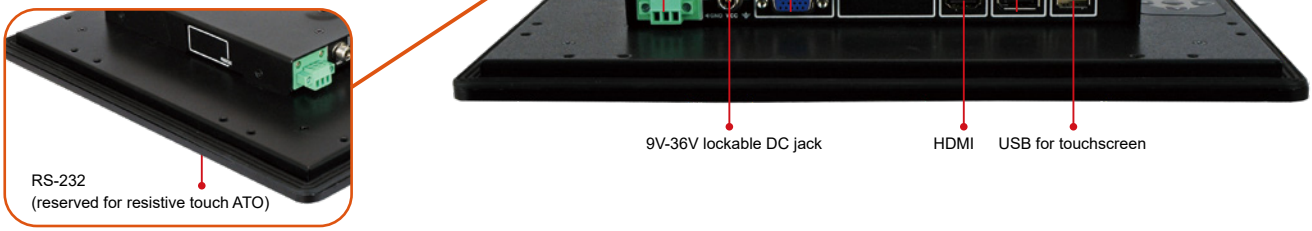

DM-F19A
Fully Integrated I/O

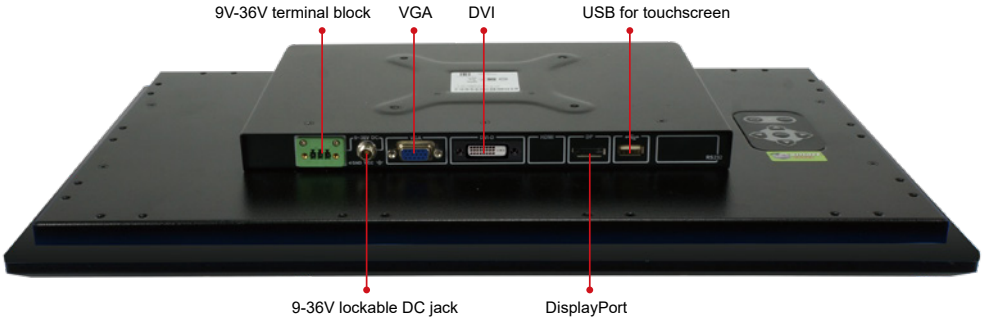

DM-F22A/F24A
Fully Integrated I/O

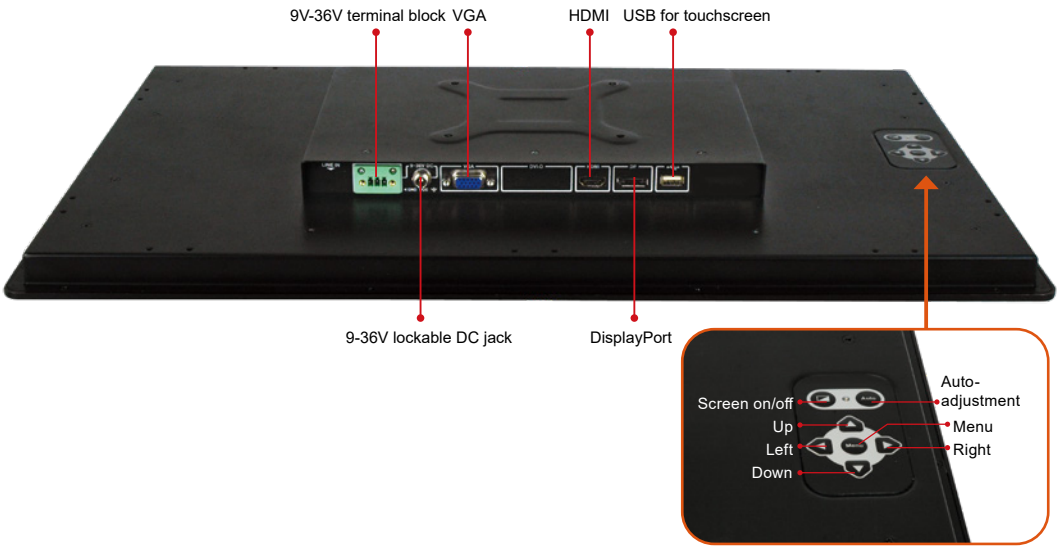

DM-F65A Dimensions

(Unit: mm)

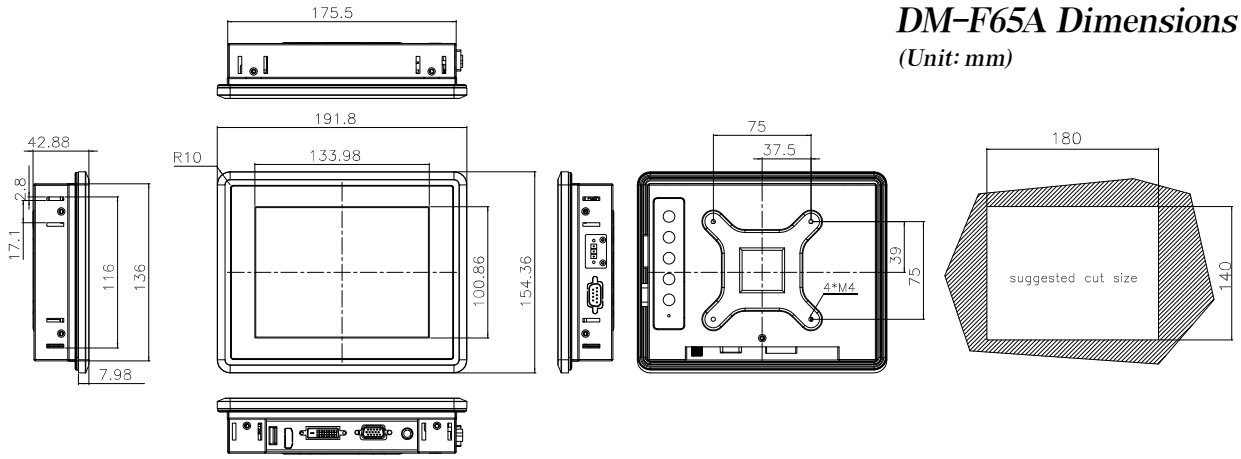

DM-F08A Dimensions

(Unit: mm)

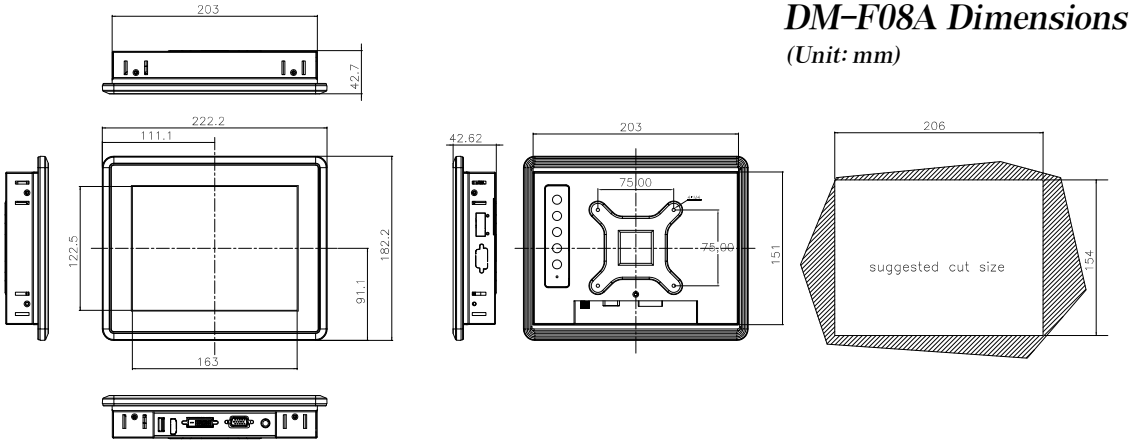

DM-F12A Dimensions

(Unit: mm)

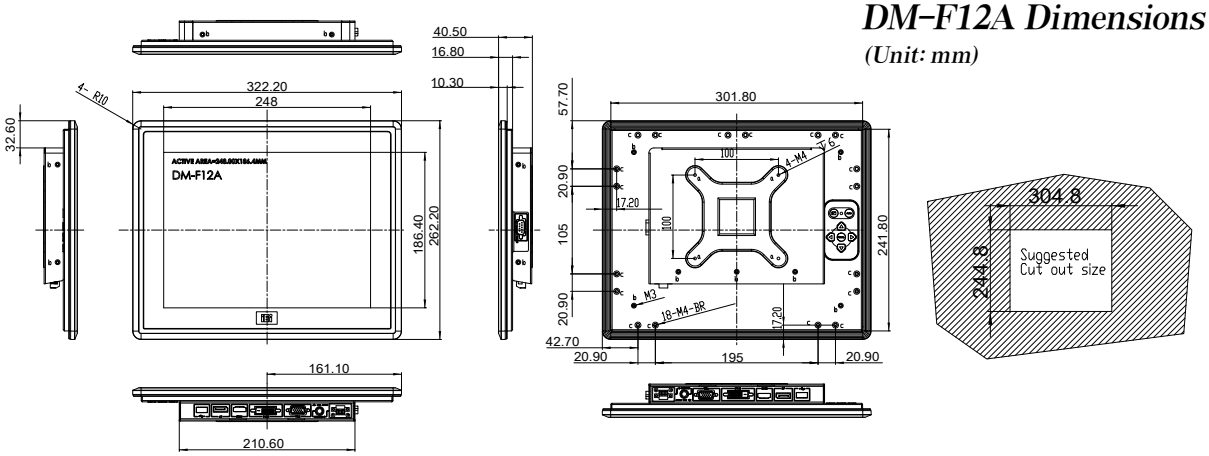

DM-F15A Dimensions

(Unit: mm)

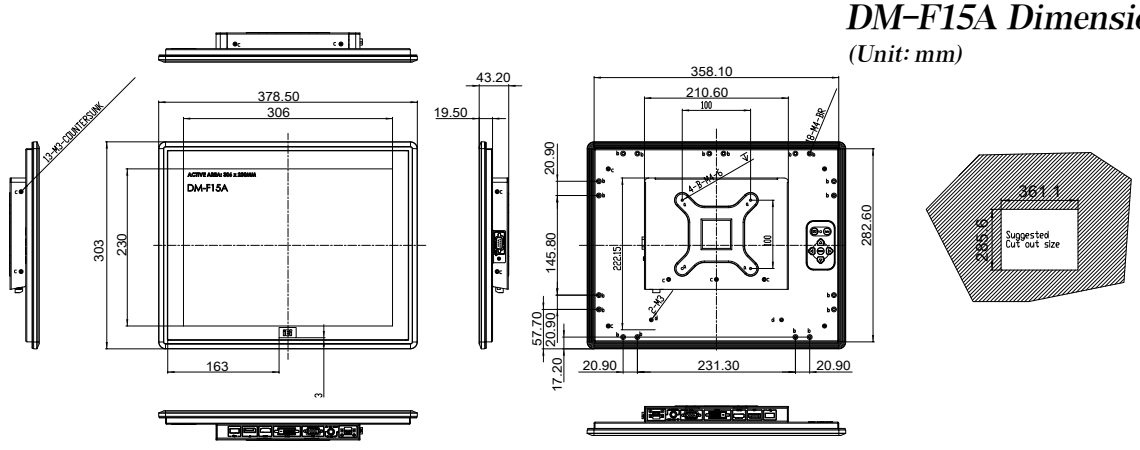

DM-FW15A Dimensions

(Unit: mm)

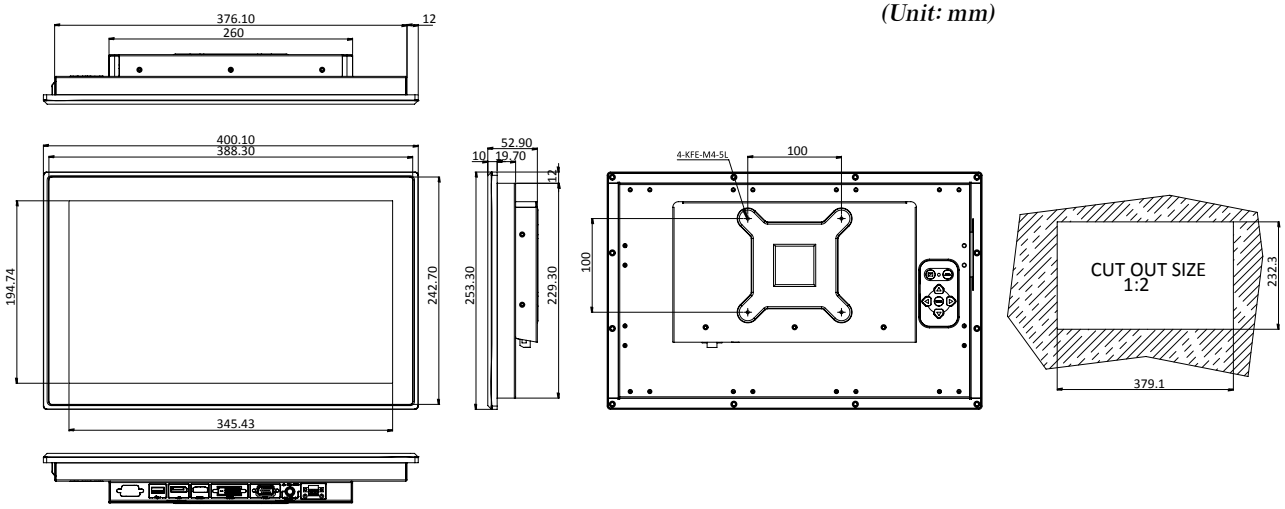

DM-F17A Dimensions

(Unit: mm)

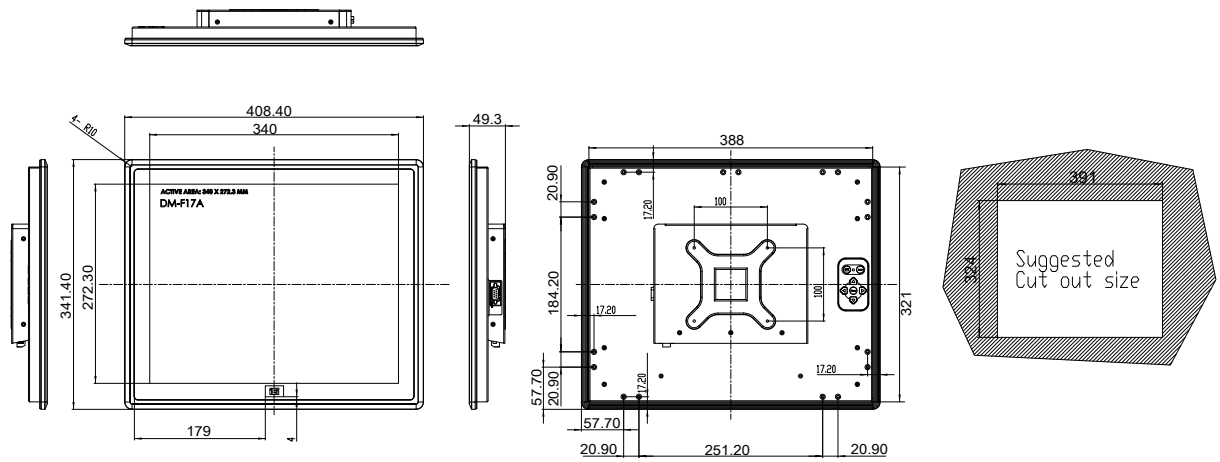

DM-F19A Dimensions

(Unit: mm)

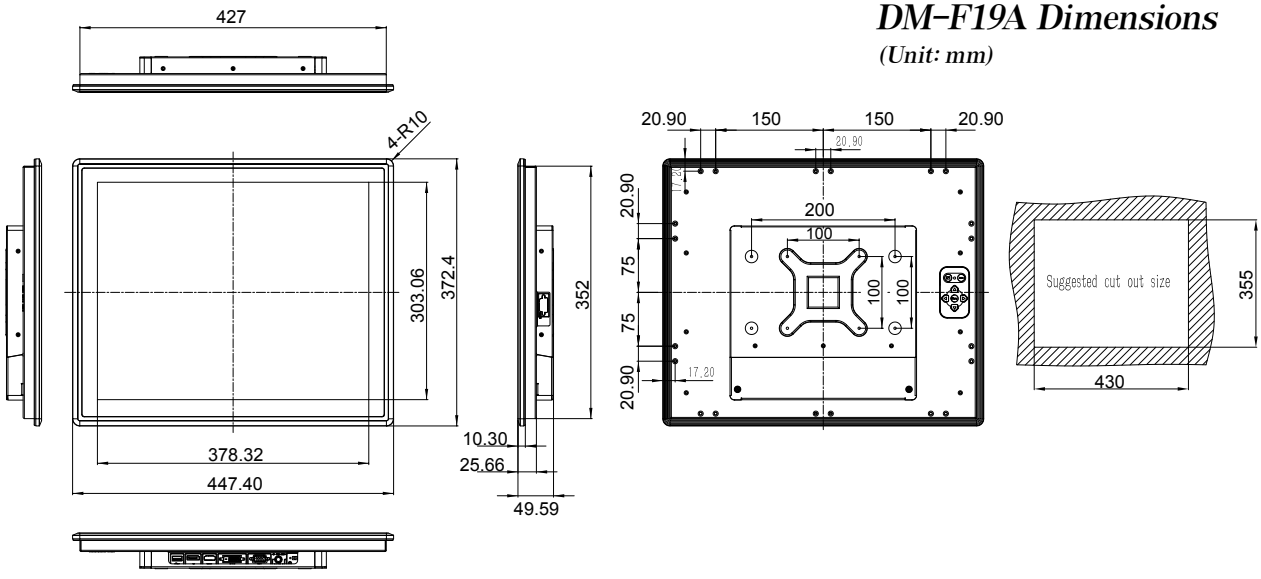

DM-FW19A Dimensions

(Unit: mm)

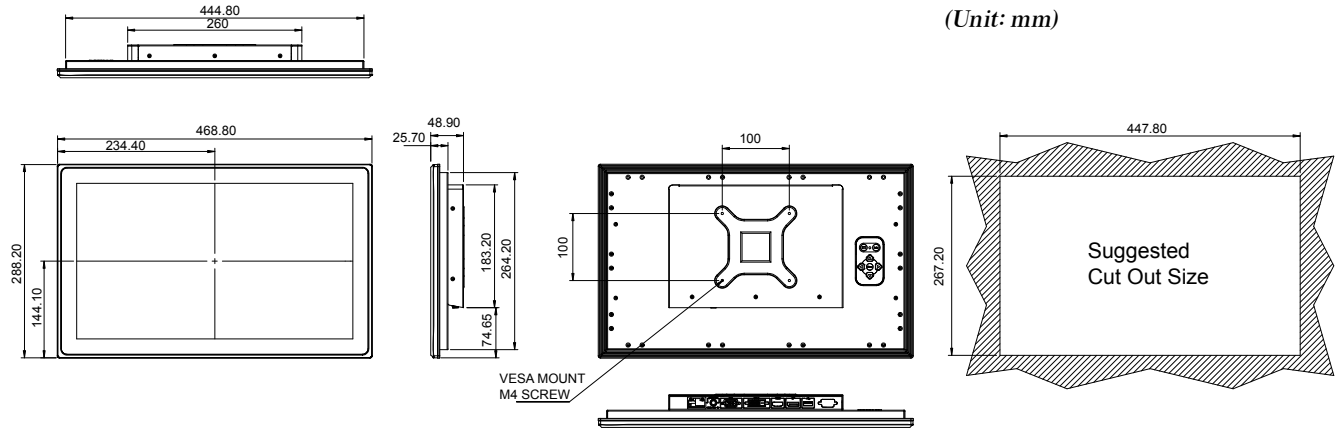

DM-F22A Dimensions

(Unit: mm)

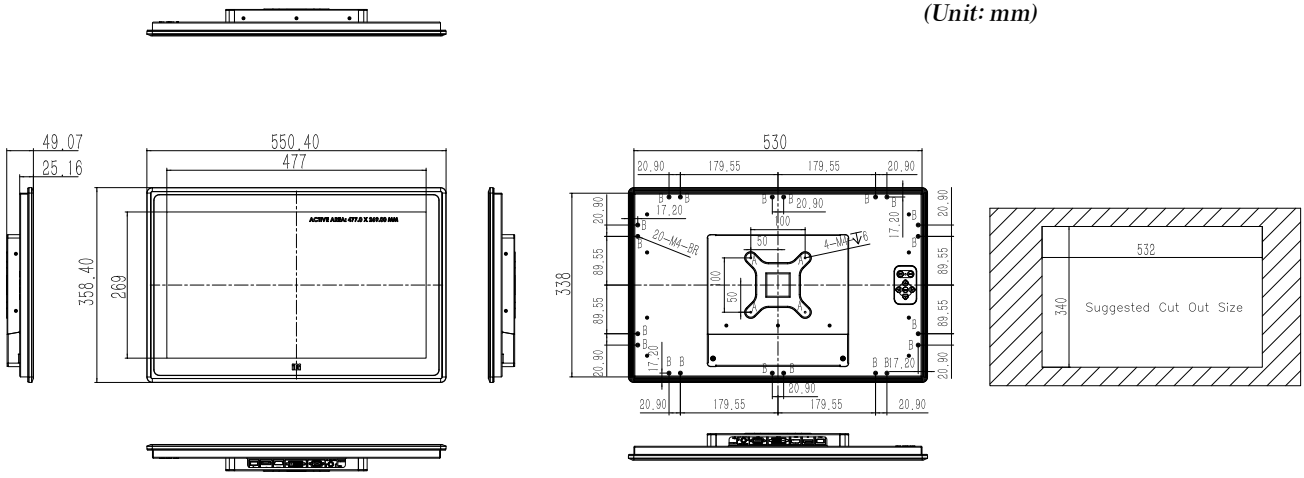

DM-F24A Dimensions

(Unit: mm)

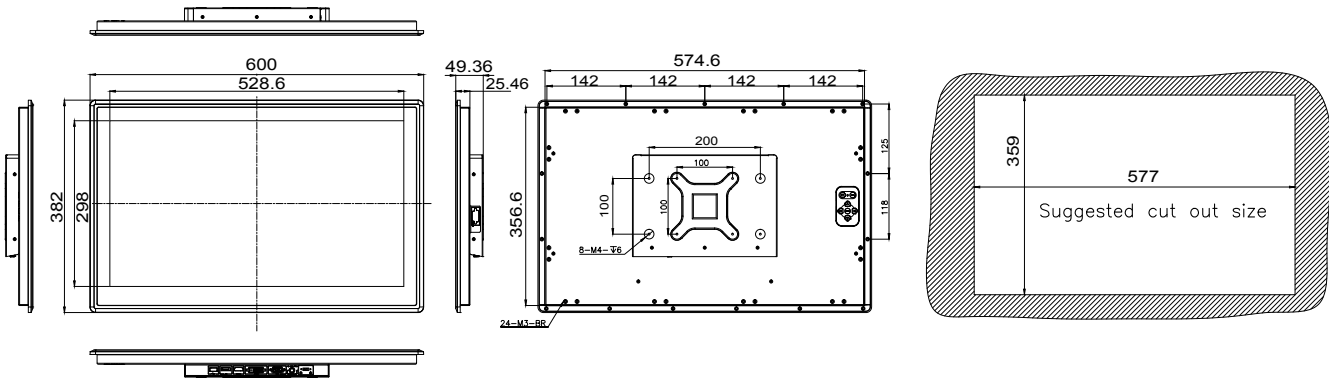

Marine Monitor Series

S19M

19” IP66 Marine Monitors

S24M

24” IP66 Marine Monitors



Features

- **IP66 Front / IP22 Rear**
- **-15°C ~ +55°C Wide Temperature and Flat-bezel Projected Capacitive Touchscreen**
- **Excellent Visual Performance**
  - Full OSD function configuration
  - 0%~100% full range dimming
  - 178°/178° wide viewing angles
- **Multiple Video Input**
  - Two VGA, two DVI, and one BNC
- **Multiple Video Output**
  - One VGA and one BNC
- **Dual Isolated AC/DC Input with Redundant Power Protection**
- **Remote OSD Settings through LAN, RS-232, RS-422 and RS-485**

Specifications

Model		S19M	S24M
LCD	LCD Size	19”	24”
	Panel Type	PMVA	AMVA
	Max Resolution	1280 x 1024 (5:4)	1920 x 1080 (16:9)
	Contrast Ratio	2000 : 1	5000 : 1
	Brightness (cd/m²)	300	300
	LCD Color	16.7M	16.7M
	Pixel Pitch (um)	294 x 294	276.75 x 276.75
	Viewing Angles (H-V)	178° / 178°	178° / 178°
	Backlight MTBF (HRs)	50000	50000
Scalar Chip		STDP8028	
I/O Ports		• DVI-D Signal Input: 2 x DVI (24-pin, female) • VGA Signal Input: 2 x D-sub (15-pin, female) • VGA Signal Output: 1 x D-sub (15-pin, female) - Clone of VGA IN* • Composite Video Input: 1 x BNC connector (Female) Composite Video Output: 1 x BNC connector (Female) • RS-232/422/485 for Remote Control (Non-isolated) • Touchscreen: 1 x USB Type A Connector (Female) • Ethernet: 1 x RJ-45 Connector for Remote Control • Isolated AC Power Inlet: 100V~240V AC • Isolated DC Terminal Block: 18V~36V DC • 1 x Buzzer	
PIP		Yes	
OSD Button		P-CAP Button (LCD on/off, Menu, Auto, Up, Down, Left, Right)	
LED/Sensor		Ambient light sensor (0%~100%)	
Power Requirement		Multi-power Supply: Isolated AC Power: 100-240V, 2-1A, 50-60Hz Isolated DC Power: 18-36V, 8-4A	
Operating Temperature		-15°C ~ 55°C	
Storage Temperature		-20°C ~ 60°C	
Humidity		5% to 95% RH	
Thermal Design		Fanless	
Housing		Aluminum front , sheet metal back (Black C)	
Cut-out Dimensions (L x W)		442 mm x 373 mm	576 mm x 358 mm
Dimensions (L x W x D)		463 mm x 394 mm x 113 mm	592 mm x 374 mm x 113 mm
Mounting		VESA 100mm x 100mm	VESA 100mm x 100mm
Net Weight (kg)		7.74	11.48
Gross Weight (kg)		11.54	15.97
Approvals		EMC: CE, FCC	
		Safety: DNV, IEC 60945 4th, IACS-E10	
		IP Rating: IP66 front , IP22 rear	

Ordering Information

PN	Description
S19M-AD/PC-R11	19" SXGA 300cd/m² Marine Display with AC and DC redundant power, PCAP touch screen, R11
S24M-AD/PC-R11	24" FHD 300cd/m2 Marine Display with AC and DC redundant power, PCAP touch screen, R11

Options

Item	Part No.	Description
Panel Mount Kit	PK-S19M-R10	for S19M
	PK-S24M-R10	for S24M
Desktop Stand	STAND-A21-R10	for S19M & S24M

Packing List

Item	Q'ty	Remark
VGA	1	VGA Signal Cable
DVI	1	DVI Signal Cable
USB	1	Touch Screen Cable USB
Power Cord	1	Power Cord
S19M or S24M	1	

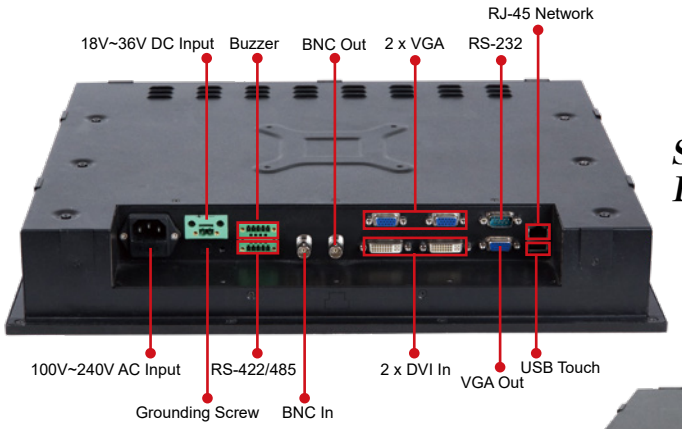

S19M
Fully Integrated I/O

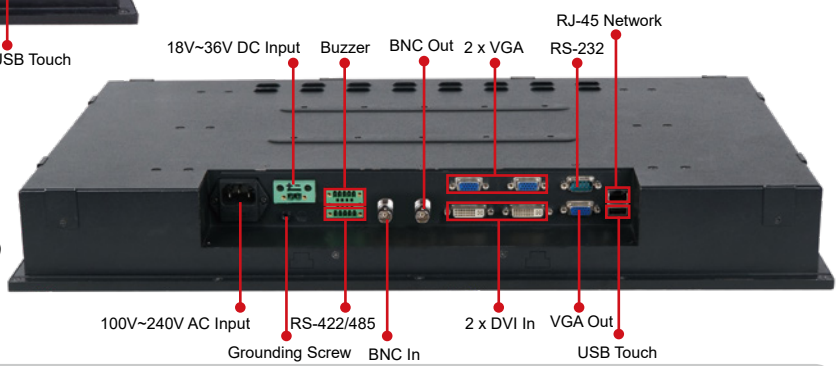

S24M
Fully Integrated I/O

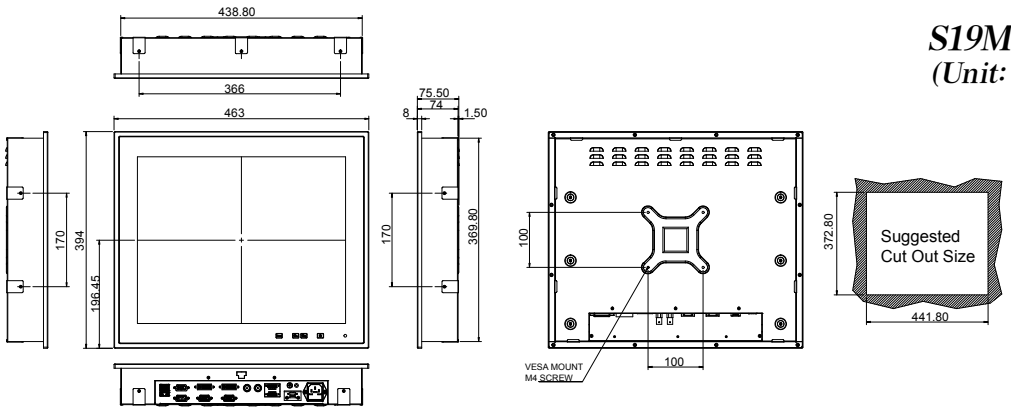

S19M Dimensions
(Unit: mm)

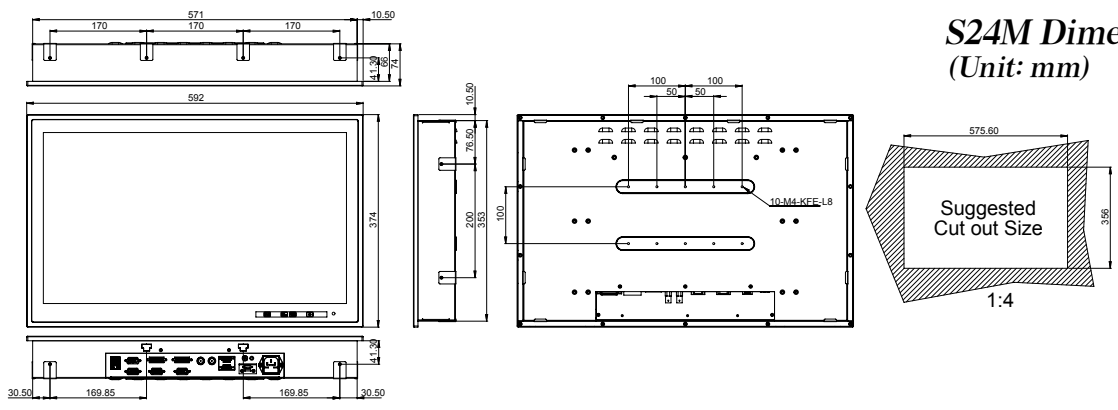

S24M Dimensions
(Unit: mm)

Medical Strategy of IEI Group



Providing better services from both IEI and BriteMED

IEI promises to provide our own-brand products continually as well as serving ODM vertical markets to offer complete, professional and flexible services. Learning from various medical product designs and manufacturing experiences, we found that the medical grade computer locates in a highly customized and professional product segment. For this reason, we planned to expand the market share in the medical field, and our medical business unit was then separated from the mother company to become an independent company called BriteMED on August 1st in 2009.

Population aging and technology improved day by day are the worldwide phenomenons which make the medical application become friendlier, such as healthcare digitalization (paper-less and automatic data collection), healthcare mobility and telemedicine. To provide our customers better services, we divide R&D works into two parts - by IEI and by BriteMED.

Medical IT for general healthcare



Medical Panel PC



AI Box PC



Medical Embedded Box

Medical devices for clinical use



Medical Monitor



E-Medical Cart

All-in-one Medical Grade Panel PC



Medical Certifications

FCC Class B | CE 60601-1-2 | UL 60601-1

User-friendly-oriented design is always the core value of us. IEI's all-in-one medical grade panel PC series offers four product lines to accommodate all healthcare needs. All products are equipped with antibateria chassis and IP65 front bezel for easy sterilization. The integrated touchscreen can be operated whilst wearing multiple gloves. In addition, the products we designed support various communication functions, such as Bluetooth, 1D/2D barcode scanner, RFID, SCR and MSR. These panel PCs can provide convenience to clinicians and increase their work efficiency.



POC Series

Point-of-care terminal

- Rich bottom I/O
- High-performance system with smart fan (or fanless)
- Ambient light sensor for panel brightness adjustment



POCm Series

Mobile point-of-care terminal

- Lightweight design: under 6.8kg without battery
- Fanless system with high performance
- 3 hot-swappable batteries with battery management utility

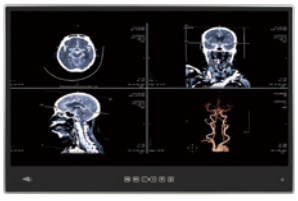

POCi Series

Intelligent point-of-care terminal

- Ultra-slim front bezel
- Fanless system with high performance
- PCIe x4 expansion
- Optional DICOM preset



IASO Series

Light medical panel PC

- 10.1" Medical Panel PC
- Light bars at both side
- Remote device management
- Elkhart Lake platform

Selection Guide





Series		POC	
Model		POC-17C-ULT3	POC-W24C-ULT3
LCD Specifications	LCD Size	17" (5:4)	24"
	Max. Resolution (W / H)	1280 x 1024	1920 x 1080
	Brightness (cd/m²)	350	250
	Contrast Ratio	1000:1	1000:1
	LCD Color	16.7M	16.7M colors (RGB 6-bit + HI_FRC)
	Pixel Pitch (H / V)	0.264 x 0.264 mm	0.2745 x 0.2745 mm
	Viewing Angle (H / V)	170° / 160°	178° / 178°
	Backlight MTBF (hrs)	30,000 (LED backlight)	30,000 (LED backlight)
Touch	Touchscreen	Projected capacitive type with 10-point multi-touch	Projected capacitive type with 10-point multi-touch
	Touch Controller	EETI	EETI
	Surface Hardness	6H	6H
System	CPU Support	6th Gen Intel® mobile ULT Core™ i7-6600U / Core™ i5-6300U / Celeron® 3855U	6th Gen Intel® mobile ULT Core™ i7-6600U / Core™ i5-6300U /Celeron® 3855U 7th Gen Intel® mobile ULT Kaby Lake on-board SoC (By project base)
	RAM	Two 260-pin 2400/2133MHz dual-channel DDR4 SO-DIMM, 4GB pre-installed (system max.32GB)	Two 260-pin 2400/2133MHz dual-channel DDR4 SO-DIMM, 4GB pre-installed (system max. 32GB)
	Storage	1 x mSATA (E-Window) 2 x 2.5" SATA 6Gb/s accessible HDD bay with RAID 0,1 (RAID function only for Core™ i5 and Core™ i7)	1 x mSATA (E-Window) 1 x 2.5" SATA 6Gb/s HDD/SDD bay
	Audio	2 x 2W speaker	2 x 3W speaker
	Camera & Microphone	2-megapixel CMOS front-facing camera with auto-focus and digital microphone	5-megapixel CMOS front-facing camera with auto-focus and digital microphone
	I/O Port	1 x HDMI output 1 x 12~28V DC jack 1 x RS-232/422/485 1 x RJ-11 for 1D/2D barcode reader	2 x GbE LAN port 4 x USB 3.2 Gen 1 port 4 x USB 2.0 port (2 on the side)
	OSD Function	1 x LCD on/off 1 x Volume up 1 x Volume down 1 x Brightness up 1 x Brightness down 1 x Touch lock button for cleaning	Combinations: 1 x Lock/Unlock OSD 1 x Power on/off
	Expansion	1 x E-Window slot (Full-size PCIe Mini slot with PCIe / mSATA / USB)	1 x PCIe Mini reserved for E-Window expansion
	LED	1 x RFID indicator	1 x RFID indicator
	Wi-Fi & Bluetooth	IEEE 802.11 a/b/g/n/ac 2T2R module with BT V4.1 (M.2 2230 A-E key)	IEEE 802.11 a/b/g/n/ac 2T2R module with BT V4.1 (M.2 2230 A-E key)
Other Features	Auto-dimming	Yes	Yes
	Light Sensor	-	Ambient light sensor for panel brightness adjustment
Physical	Construction Material	ABS+PC plastic with anti-bacterial material pantone RAL 9016 (Apple white)	ABS+PC plastic with anti-bacterial material
	Mounting	Wall, Stand and Arm VESA 100/75	Wall, Stand and Arm VESA 100/75
	Weight (Net)	6.0 Kg	7.5 Kg
	Dimensions (LxWxH)	435 x 64.5 x 376 mm	594.6 x 60.68 x 379.6 mm
Environment	Operating Temperature	0°C~40°C	0°C~40°C
	Storage Temperature	-20°C~65°C	-20°C~60°C
	Humidity	10% to 95% (non-condensing)	10% to 95% (non-condensing)
	Vibration	1G	1G
	Shock	Operating shock: 5G peak acceleration (11ms duration) Non-operating shock: 15G peak acceleration (11ms duration)	Operating shock: 5G peak acceleration (11ms duration) Non-operating shock: 15G peak acceleration (11ms duration)
	IP Level	Front: IP65	Front: IP65
	Thermal	Fanless	Fanless
Power	Power Input	19V DC input	19V DC input
	Power Adapter	150W medical power adapter	150W medical power adapter
Certification	EMC & Safety	CE, FCC Class B Part 18 IEC 60601-1: 2005+AMD1: 2012 (Edition 3.1) IEC 60601-1-2: 2014 (Edition 4.0)	CE, FCC Class B Part 18 IEC 60601-1: 2005+AMD1: 2012 (Edition 3.1) IEC 60601-1-2: 2014 (Edition 4.0)

Selection Guide





Series		POCm	
Model		POCm-W22C-ULT3	POCm-W24C-ULT3
LCD Specifications	LCD Size	21.5'' (16:9)	23.8"
	Max. Resolution (W / H)	1920 x 1080	1920 x 1080
	Brightness (cd/m²)	250	250
	Contrast Ratio	1000:1	1000:1
	LCD Color	16.7M colors (RGB 6-bit)	16.7M colors (RGB 6-bit)
	Pixel Pitch (H / V)	0.24825 x 0.24825 mm	0.2745 x 0.2745 mm
	Viewing Angle (H / V)	170° / 160°	178° / 178°
	Backlight MTBF (hrs)	30,000 (LED backlight)	30,000 (LED backlight)
Touch	Touchscreen	Projected capacitive type with 10-point multi-touch	Projected capacitive type with 10-point multi-touch
	Touch Controller	EETI	EETI
	Surface Hardness	6H	6H
System	CPU Support	6th Gen Intel® mobile ULT Core™ i7-6600U / Core™ i5-6300U / Celeron® 3855U	6th Gen Intel® mobile ULT Core™ i7-6600U / Core™ i5-6300U / Celeron® 3855U
	LAN Controller	1 x Intel® I211 Ethernet Controller 1 x Intel® I219 Ethernet Controller (AMT 12.x supported by i7/i5 SKUs)	1 x Intel® I211 Ethernet Controller 1 x Intel® I219 Ethernet Controller (AMT 12.x supported by i7/i5 SKUs)
	RAM	Two 260-pin 2400/2133MHz dual-channel DDR4 SO-DIMM, 4GB pre-installed (system max. 32GB)	Two 260-pin 2400/2133MHz dual-channel DDR4 SO-DIMM, 4GB pre-installed (system max. 32GB)
	Storage	1 x 2.5" Accessible SATA HDD bay 2 x 2280 M key (PCIe x1/SATA) with RAID	1 x 2.5" Accessible SATA HDD bay 2 x 2280 M key (PCIe x1/SATA) with RAID
	Audio	2 x 2W speaker	2 x 2W speaker
	Camera & Microphone	5-megapixel CMOS front-facing camera with auto-focus and digital microphone	5-megapixel CMOS front-facing camera with auto-focus and digital microphone
	I/O Port	Bottom 1 x DC Jack 1 x Digital Mic 2 x HDMI output 2 x GbE LAN port 2 x RS-232/422/485 4 x USB 3.2 Gen 1 port	Side 1 x Mic in 1 x Audio out 2 x USB 2.0 port
	OSD Function	1 x System on/off 1 x Volume up 1 x Volume down	1 x Brightness up 1 x Brightness down 1 x LCD on/off and touch lock for cleaning
	Expansion	1 x Full-size/half-size PCIe Mini (PCIe+USB)	1 x Full-size/half-size PCIe Mini (PCIe+USB)
	LED	1 x RFID indicator 1 x Power indicator 3 x Battery indicator (color: blue/red)	1 x RFID indicator 1 x Power indicator 3 x Battery indicator (color: blue/red)
	Wi-Fi & Bluetooth	IEEE 802.11 a/b/g/n/ac 2T2R module with BT V4.2 (M.2 2230 A-E key)	IEEE 802.11 a/b/g/n/ac 2T2R module with BT V4.2 (M.2 2230 A-E key)
Physical	Construction Material	ABS+PC plastic with anti-bacterial material	ABS+PC plastic with anti-bacterial material
	Mounting	Wall, Stand and Arm VESA 75/100	Wall, Stand and Arm VESA 75/100
	Weight (Net / Gross)	7.07 kg without batteries / 8.43 kg with 3 batteries	8.18 kg without batteries / 9.53 kg with 3 batteries
	Dimensions (LxWxH)	543 x 71 x 350 mm	594.6 x 71 x 379.6 mm
Environment	Operating Temperature	0°C~40°C	0°C~40°C
	Storage Temperature	-20°C~60°C	-20°C~60°C
	Humidity	10% to 90% (non-condensing)	10% to 90% (non-condensing)
	Vibration	1G	1G
	Shock	Operating shock: 5G peak acceleration (11ms duration) Non-operating shock: 10G peak acceleration (11ms duration)	Operating shock: 5G peak acceleration (11ms duration) Non-operating shock: 10G peak acceleration (11ms duration)
	IP Level	Front: IP65, Back: IP32	Front: IP65, Back: IP32
	Thermal	Fanless	Fanless
Power	Power Input	19V DC input	19V DC input
	Power Adapter	150W medical power adapter	150W medical power adapter
	Battery	3 slots for Li-ion battery pack	3 slots for Li-ion battery pack
Certification	EMC & Safety	CE, FCC Class B Part 18 IEC 60601-1-2: 2014 (Edition 4.0) IEC 60601-1:2005+AMD1:2012 (Edition 3.1)	CE, FCC Class B Part 18 IEC 60601-1-2: 2014 (Edition 4.0) IEC 60601-1:2005+AMD1:2012 (Edition 3.1)

Selection Guide

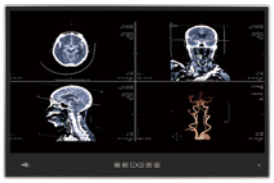



Series		POCi	
Model		POCi-W22C-ULT5	POCi-W24C-ULT5
LCD Specifications	LCD Size	21.5'' (16:9)	23.8'' (16:9)
	Max. Resolution (W / H)	1920 x 1080	1920 x 1080
	Brightness (cd/m²)	250	250
	Contrast Ratio	1000:1	1000:1
	LCD Color	16.7M RGB 6-bit (Hi-FRC)	16.7M RGB 6-bit (Hi-FRC)
	Pixel Pitch (H / V)	0.24795 x 0.24795 mm	0.2745 × 0.2745 mm
	Viewing Angle (H / V)	178˚ / 178˚	178˚ / 178˚
	Backlight MTBF (hrs)	30,000 (LED backlight)	30,000 (LED backlight)
Touch	Touchscreen	Projected capacitive type with 10-point multi-touch	Projected capacitive type with 10-point multi-touch
	Touch Controller	EETI (80H84)	EETI (80H84)
	Surface Hardness	6H	6H
	Coating	Chemical etching AG	Chemical etching AG
System	CPU Support	Intel® Core™ i7-8665UE (Whiskey Lake ULT platform) Intel® Core™ i5-8365UE (Whiskey Lake ULT platform)	Intel® Core™ i7-8665UE (Whiskey Lake ULT platform) Intel® Core™ i5-8365UE (Whiskey Lake ULT platform)
	LAN Controller	1 x Intel® I211 Ethernet Controller 1 x Intel® I219 Ethernet Controller (AMT 12.x supported by i7/i5 SKUs)	1 x Intel® I211 Ethernet Controller 1 x Intel® I219 Ethernet Controller (AMT 12.x supported by i7/i5 SKUs)
	RAM	Two 260-pin 2400/2133MHz dual-channel DDR4 SO-DIMM, 4GB pre-installed (system max. 64GB)	Two 260-pin 2400/2133MHz dual-channel DDR4 SO-DIMM, 4GB pre-installed (system max. 64GB)
	Storage	1 x M.2 2242/60/80 M key (PCIe x4) 1 x 2.5" accessible SATA HDD/SSD bay	1 x M.2 2242/60/80 M key (PCIe x4) 1 x 2.5" accessible SATA HDD/SSD bay
	Audio	2 x 2W speaker	2 x 2W speaker
	I/O Port	Bottom 1 x DC jack 1 x HDMI 1.4 output 1 x Isolated 1.5kV RS-232 1 x Combo audio-out / mic-in 1 x Isolated Gigabit LAN (I211) 1 x Isolated Gigabit LAN (I219 supports Intel® vPro) 4 x USB 3.2 Gen 2 port	Side 2 x USB 2.0 port
	OSD Function	1 x Power on/off 1 x Reading light on/off 1 x Backlight brightness up	1 x Backlight brightness down 1 x Clean mode on/off 1 x DICOM mode app on/off (optional)
	Expansion	1 x PCIe x4	1 x PCIe x4
	LED	1 x RFID indicator (optional) 2 x LED reading light	1 x RFID indicator (optional) 2 x LED reading light
	Wi-Fi & Bluetooth	IEEE 802.11 ax 2T2R module (Wi-Fi 6 Module) with BT V5.0 (M.2 2230 A-E key)	IEEE 802.11 ax 2T2R module (Wi-Fi 6 Module) with BT V5.0 (M.2 2230 A-E key)
Physical	Construction Material	Front bezel: Aluminum die-casting Rear cover: ABS+PC plastic (chemical resistant)	Front bezel: Aluminum die-casting Rear cover: ABS+PC plastic (chemical resistant)
	Mounting	Wall, Stand and Arm VESA 75/100	Wall, Stand and Arm VESA 75/100
	Weight (Net)	6.9 kg	8.1 kg
	Dimensions (LxWxH)	507.5 x 64.5 x 335.5 mm	567 x 63.9 x 370.6 mm
Environment	Operating Temperature	0°C~40°C	0°C~40°C
	Storage Temperature	-20°C~60°C	-20°C~60°C
	Humidity	10% to 95% (non-condensing)	10% to 95% (non-condensing)
	Vibration	1G	1G
	Shock	Operating shock: 5G peak acceleration (11ms duration) Non-operating shock: 15G peak acceleration (11ms duration)	Operating shock: 5G peak acceleration (11ms duration) Non-operating shock: 15G peak acceleration (11ms duration)
	IP Level	Front: IP66	Front: IP66
	Thermal	Fanless	Fanless
Power	Power Input	19V DC input	19V DC input
	Power Adapter	150W medical power adapter	150W medical power adapter
	Battery	3S3P Li-ion battery pack, 11.1V, 7800mAh (optional)	3S3P Li-ion battery pack, 11.1V, 7800mAh (optional)
	Built-in Medical Power	150W, 85~264 VAC, medical power supply (optional)	150W, 85~264 VAC, medical power supply (optional)
Certification	EMC & Safety	CE, FCC Class B Part 18 EN 60601-1-2: 2015 (Edition 4.0) EN 60601-1:2006/A1:2013 (Edition 3.1)	CE, FCC Class B Part 18 EN 60601-1-2: 2015 (Edition 4.0) EN 60601-1:2006/A1:2013 (Edition 3.1)

Point-of-Care Terminal

POC-17C-ULT3 | 17” Medical Panel PC with 6th Generation Intel® mobile ULT Core™ i7/i5/Celeron® processor

Features

- 17” 5:4 LED panel (1280 x 1024)
- 6th Generation Intel® mobile ULT Core™ i7-6600U / Core™ i5-6300U /Celeron® 3855U
- Projected capacitive type with 10-point multi-touch
- IP65 compliant front bezel
- Anti-bacteria cover
- RAID function supported (RAID 0 and RAID 1) (only for Core™ i5 or Core™ i7)



Intel® Skylake-U | RAID | Fanless | RFID | Camera | SCR | IP65 | Multi-touch | Anti-bacteria | E-Window

• Built-in Camera Cover

The camera cover protects the privacy of patients. The built-in design also makes the maintenance more convenient, and prevents cover loss.

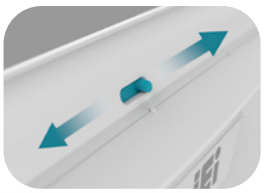

• RAID 0 and RAID 1 Function

The RAID 0/1 capability offers redundancy through mirroring - data is written identically to two drives. Users in the hospital will not need to worry about data lost anymore.
(only for Core™ i5 or above)





• E-Window for Multiple Expansion

The reserved PCIe Mini slot for expansion helps system integrators add more functions easily without any additional cost efforts.



E-Window

• Front IP65 Compliance

Easy to clean the front panel by spray and wipe detergent.

• Advanced Touchscreen for Saline

The PCAP touch not only supports multi-touch function but also provides smooth control when operating with gloves. Moreover, we cooperate with our suppliers to work hard on avoiding the accidental operating from sterile saline.





Specifications

Model		POC-17C-ULT3
LCD Specifications	LCD Size	17” (5:4)
	Max. Resolution (W / H)	1280 x 1024
	Brightness (cd/m²)	350
	Contrast Ratio	1000:1
	LCD Color	16.7M
	Pixel Pitch (H / V)	0.264 x 0.264 mm
	Viewing Angle (H / V)	170° / 160°
	Backlight MTBF (hrs)	30,000 (LED backlight)
Touch	Touchscreen	Projected capacitive type with 10-point multi-touch
	Touch Controller	EETI
	Surface Hardness	6H
System	CPU Support	6th Gen Intel® mobile ULT Core™ i7-6600U / Core™ i5-6300U / Celeron® 3855U
	RAM	Two 260-pin 2400/2133MHz dual-channel DDR4 SO-DIMM, 4GB pre-installed (system max.32GB)
	Storage	1 x mSATA (E-Window) 2 x 2.5” SATA 6Gb/s accessible HDD bay with RAID 0,1 (RAID function only for Core™ i5 and Core™ i7)
	Audio	2 x 2W Speaker
	Camera & Microphone	2-megapixel CMOS front-facing camera with auto-focus and digital microphone
	I/O Port	1 x HDMI output 1 x 12~28V DC jack 1 x RS-232/422/485 1 x RJ-11 for 1D/2D barcode reader 2 x GbE LAN port 4 x USB 3.2 Gen 1 port 4 x USB 2.0 port (2 on the side)
	OSD Function	1 x LCD on/off 1 x Volume up 1 x Volume down 1 x Brightness up 1 x Brightness down 1 x Touch lock button for cleaning Combinations: 1 x Lock/Unlock OSD 1 x Power on/off
	Expansion	1 x E-Window slot (Full-size PCIe Mini slot with PCIe / mSATA / USB)
	LED	1 x RFID indicator
	Wi-Fi & Bluetooth	IEEE 802.11 a/b/g/n/ac 2T2R module with BT V4.1 (M.2 2230 A-E key)
Other Features	Auto-dimming	Yes
Physical	Construction Material	ABS+PC plastic with anti-bacterial material pantone RAL 9016 (Apple white)
	Mounting	Wall, Stand and Arm VESA 100/75
	Weight (Net)	6.0 Kg
	Dimensions (LxWxH)	435 x 64.5 x 376 mm
Environment	Operating Temperature	0°C~40°C
	Storage Temperature	-20°C~65°C
	Humidity	10% to 95% (non-condensing)
	Vibration	1G
	Shock	Operating shock: 5G peak acceleration (11ms duration) Non-operating shock: 15G peak acceleration (11ms duration)
	IP Level	Front: IP65
	Thermal	Fanless
Power	Power Input	19V DC input
	Power Adapter	150W medical power adapter
Certification	EMC & Safety	CE, FCC Class B Part 18 IEC 60601-1: 2005+AMD1: 2012 (Edition 3.1) IEC 60601-1-2: 2014 (Edition 4.0)

Ordering Information

Part No.	Description
POC-17C-ULT3-C/PC/4G-R11	17” 350 cd/m² 1280x1024 Panel PC with Intel® 14nm 6th Generation Mobile Celeron® 3855U (15W) 1.6GHz on-board processor (ULT), 1*4GB DDR4 RAM, 802.11a/b/g/n/ac Wi-Fi module, PCAP touchscreen, 2M camera, microphone, R11
POC-17C-ULT3-i5/PC/4G-R11	17” 350 cd/m² 1280x1024 Panel PC with Intel® 14nm 6th Generation Mobile Core™ i5-6300U (15W) 2.4GHz on-board processor (ULT), 1*4GB DDR4 RAM, 802.11a/b/g/n/ac Wi-Fi module, PCAP touchscreen, 2M camera, microphone, R11
POC-17C-ULT3-i7/PC/4G-R11	17” 350 cd/m² 1280x1024 Panel PC with Intel® 14nm 6th Generation Mobile Core™ i7-6600U (15W) 2.6GHz on-board processor (ULT), 1*4GB DDR4 RAM, 802.11a/b/g/n/ac Wi-Fi module, PCAP touchscreen, 2M camera, microphone, R11

Options

Number	Description
MEDP-HD-R10	Metal handle covered with soft rubber
MEDP-MF-RFID-R11	Mifare RFID reader, 13.56MHz, with LED indicator and 100mm antenna, IEI assembly only
MEDP-TPM-02-R10	Trusted platform module kit with 300mm cable, IEI assembly only
POC-17C-ULT3-W10E64-V-R10	OS Image with Windows Embedded Standard 10 E Value 64-bit for POC-17C/W24C Series, with DVD-ROM, RoHS
POCP-CC03-R10	POC-17C-ULT3 cable cover, white, plastic, R10

IQ Mounting Options

Item	Part No.
Wall Mount Kit	AFLWK-19B
Arm	ARM-31-RS
Stand	STAND-A21-R10

Packing List

Item	Part No.	Q’ty	Remark
Power Adapter	63040-010150-400-RS	1	150W medical power adapter Input: 90V~264V AC, Output: 19V DC
Power Cord		1	European power cord, 183 cm, C13



POC-17C-ULT3 I/O Interface

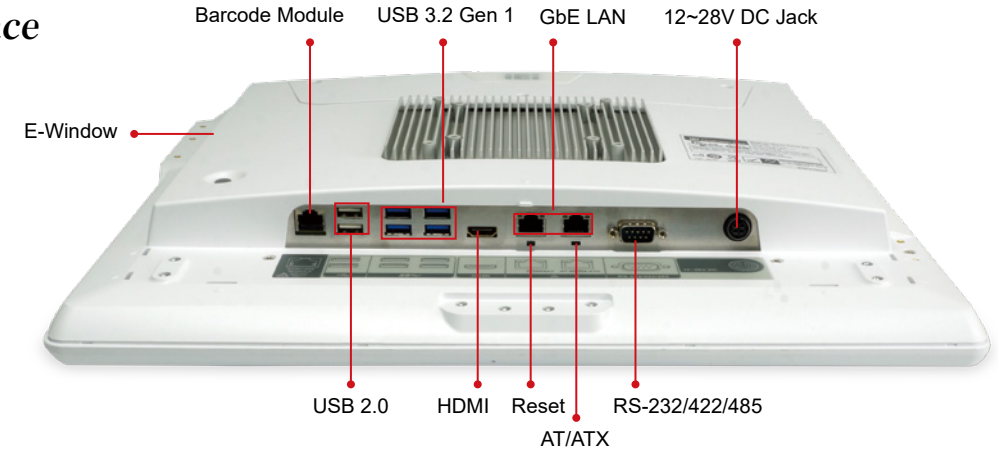

POC-17C-ULT3 Dimensions (Unit: mm)

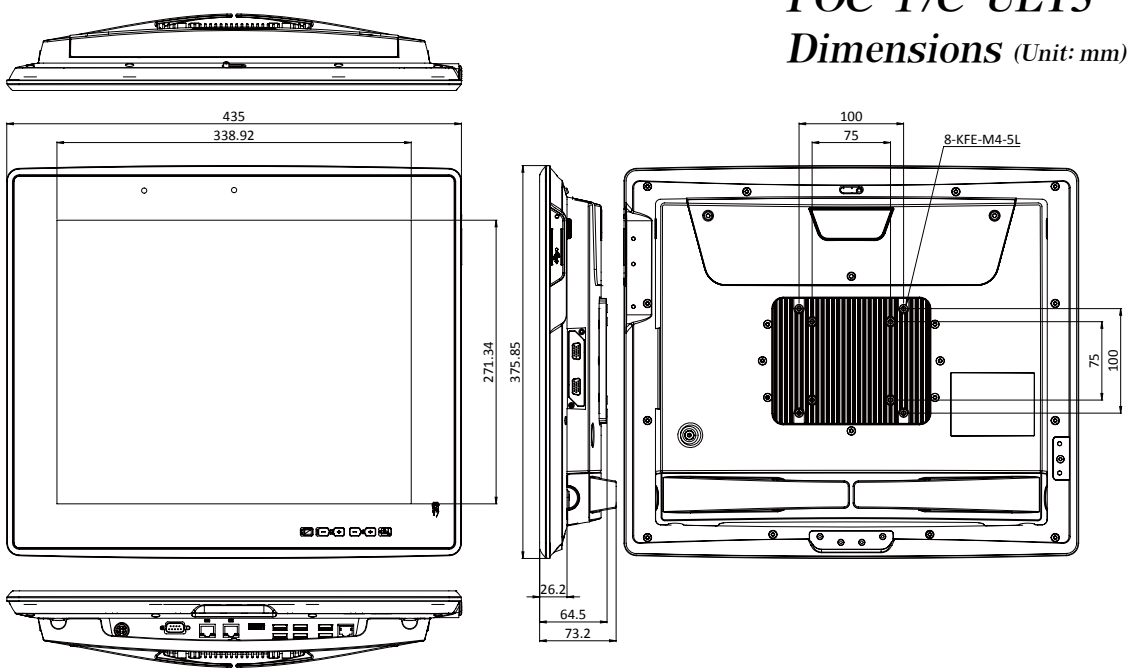

Point-of-Care Terminal

POC-W24C-ULT3 | 24” Medical Panel PC with 6th Generation Intel® mobile ULT Core™ i7/i5/Celeron® processor

Features

- E-Window expansion slot
- Intel® Core™ i5-6300U (Skylake) processor
- Anti-bacteria housing with IP65 front bezel and IP32 rear cover protection
- PCAP touch allows multi-touch, multi-layer gloves and water on screen operation



Intel® Skylake-U | Fanless | RFID | Camera | HDMI | IP65 | Multi-touch | E-Window

Specifications

Model		POC-W24C-ULT3	
LCD Specifications	LCD Size	24”	
	Max. Resolution (W / H)	1920 x 1080	
	Brightness (cd/m²)	250	
	Contrast Ratio	1000:1	
	LCD Color	16.7M colors (RGB 6-bit + HI_FRC)	
	Pixel Pitch (H / V)	0.2745 x 0.2745 mm	
	Viewing Angle (H / V)	178° / 178°	
	Backlight MTBF (hrs)	30,000 (LED backlight)	
Touch	Touchscreen	Projected capacitive type with 10-point multi-touch	
	Touch Controller	EETI	
	Surface Hardness	6H	
System	CPU Support	6th Gen Intel® mobile ULT Core™ i7-6600U / Core™ i5-6300U /Celeron® 3855U 7th Gen Intel® mobile ULT Kaby Lake on-board SoC (By project base)	
	RAM	Two 260-pin 2400/2133MHz dual-channel DDR4 SO-DIMM, 4GB pre-installed (system max. 32GB)	
	Storage	1 x mSATA (E-Window) 1 x 2.5" SATA 6Gb/s HDD/SDD bay	
	Audio	2 x 3W speaker	
	Camera & Microphone	5-megapixel CMOS front-facing camera with auto-focus and digital microphone	
	I/O Port	1 x HDMI output 1 x 12~28V DC jack 1 x RS-232/422/485 1 x RJ-11 for 1D/2D barcode reader	2 x GbE LAN port 4 x USB 3.2 Gen 1 port 4 x USB 2.0 port (2 on the side)
	OSD Function	1 x LCD on/off 1 x Volume up 1 x Volume down 1 x Brightness up 1 x Brightness down 1 x Touch lock button for cleaning	Combinations: 1 x Lock/Unlock OSD 1 x Power on/off
	Expansion	1 x PCIe Mini reserved for E-Window expansion	
	LED	1 x RFID indicator	
	Wi-Fi & Bluetooth	IEEE 802.11 a/b/g/n/ac 2T2R module with BT V4.1 (M.2 2230 A-E key)	
Other Features	Auto-dimming	Yes	
	Light Sensor	Ambient light sensor for panel brightness adjustment	
Physical	Construction Material	ABS+PC plastic with anti-bacterial material	
	Mounting	Wall, Stand and Arm VESA 100/75	
	Weight (Net)	7.5 Kg	
	Dimensions (LxWxH)	594.6 x 60.68 x 379.6 mm	
Environment	Operating Temperature	0°C~40°C	
	Storage Temperature	-20°C~60°C	
	Humidity	10% to 95% (non-condensing)	
	Vibration	1G	
	Shock	Operating shock: 5G peak acceleration (11ms duration) Non-operating shock: 15G peak acceleration (11ms duration)	
	IP Level	Front: IP65	
	Thermal	Fanless	
Power	Power Input	19V DC input	
	Power Adapter	150W medical power adapter	
Certification	EMC & Safety	CE, FCC Class B Part 18 IEC 60601-1: 2005+AMD1: 2012 (Edition 3.1) IEC 60601-1-2: 2014 (Edition 4.0)	

Ordering Information

Part No.	Description
POC-W24C-ULT3-C/PC/4G-R11	24” 250cd/m² FHD Medical panel PC, Intel® Skylake Dual Core Celeron® 3855U Processor (1.60 GHz), 1*4GB DDR4, 802.11a/b/g/n/ac, PCAP touchscreen, 5M camera, microphone, R11
POC-W24C-ULT3-i5/PC/4G-R11	24” 250cd/m² FHD Medical panel PC, Intel® Skylake Dual Core Core™ i5-6300U Processor (2.4 GHz), 1*4GB DDR4, 802.11a/b/g/n/ac, PCAP touchscreen, 5M camera, microphone, R11
POC-W24C-ULT3-i7/PC/4G-R11	24” 250cd/m² FHD Medical panel PC, Intel® Skylake Dual Core Core™ i7-6600U Processor (2.60 GHz), 1*4GB DDR4, 802.11a/b/g/n/ac, PCAP touchscreen, 5M camera, microphone, R11

Options

Part No.	Description
MEDP-HD-R10	Metal handle covered with soft rubber
MEDP-MF-RFID-R11	Mifare RFID reader, 13.56MHz, with LED indicator, 200mm antenna, RFID & LED cable, IEI assembly only
MEDP-TPM-03-R10	Trusted platform module kit with 150mm cable, IEI assembly only
POC-17C-ULT3-W10E64-V-R10	OS Image with Windows Embedded Standard 10 E Value 64-bit for POC-17C/W24C Series, with DVD-ROM, RoHS

IQ Mounting Options

Item	Part No.
Wall Mount Kit	AFLWK-19B
Arm	ARM-31-RS
Stand	STAND-A21-R10

Packing List

Item	Part No.	Q’ty	Remark
Power Adapter	63040-010150-400-RS	1	150W medical power adapter Input: 90V~264V AC; Output: 19V DC
Power Cord		1	European power cord, 183 cm, C13



POC-W24C-ULT3
I/O Interface

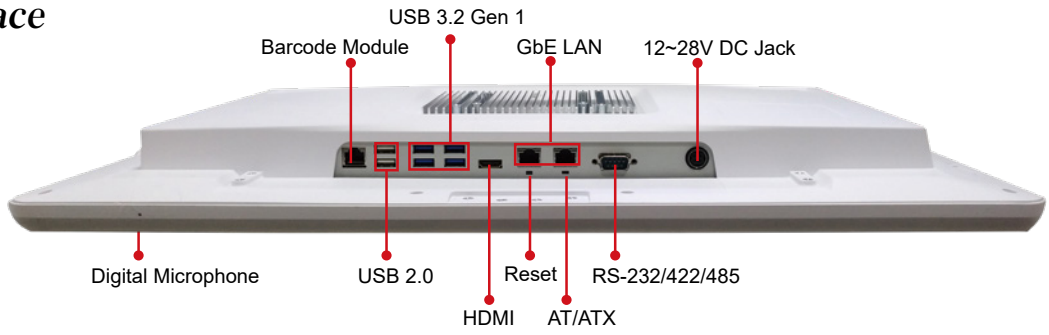

POC-W24C-ULT3
Dimensions (Unit: mm)

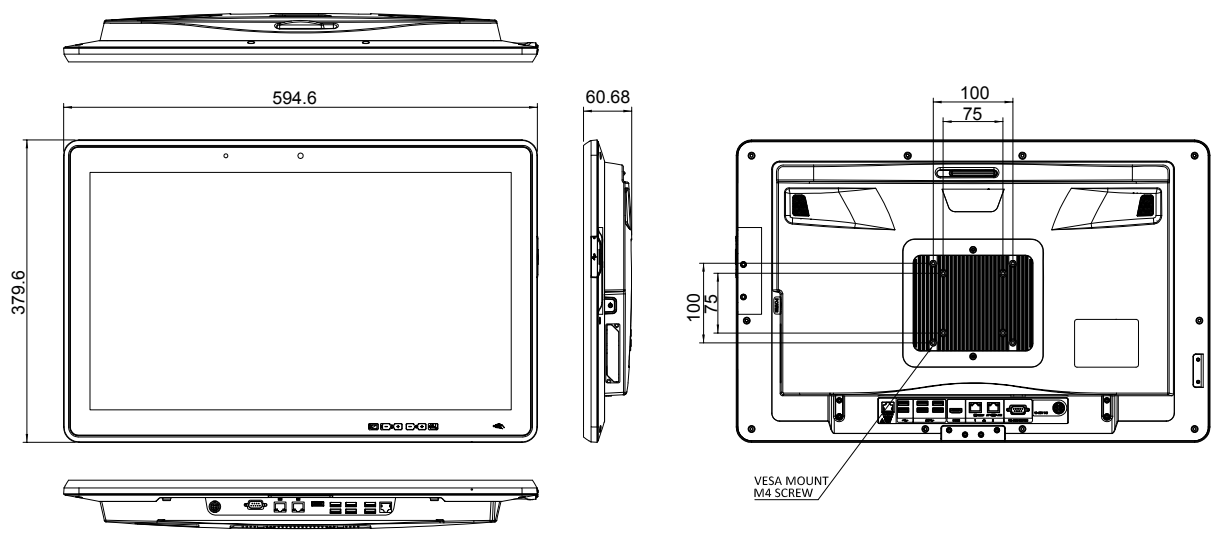

Mobile Point-of-Care Terminal

POCm-W22C-ULT3
POCm-W24C-ULT3

22”/24" Medical Panel PC with 6th Generation Intel® mobile ULT Core™ i7/i5/Celeron® processor

DESIGN AWARD 2019

TAIWAN EXCELLENCE 2020

Features

- Intel® Celeron®, Core™ i5/i7 Skylake processor
- Anti-bacteria housing with IP65 front bezel and IP32 rear cover protection
- PCAP touch allows multi-touch, multi-layer gloves and water-on-screen operation
- Three hot-swappable batteries with a total runtime of 8 hours, ideal for non-powered medical carts



Intel® Skylake-U | Fanless | RFID | Camera | HDMI | IP65 | Multi-touch | E-Window

Key Features

3 hot-swappable batteries that can provide sufficient power, and the ergonomic side-facing design eases the use for nurses with different height. Compared to the LiFePO4 battery of the traditional nursing cart, the batteries installed on the POCm have better design by reducing more than 5 kilograms of weight. The battery docking station can perform fast charging, taking only 3.5 hours from 0 to 100%.



• Lightweight Design

Traditionally, the battery of working station is bulky and occupies space. The hot-swappable batteries makes the POCm series an ideal medical cart computer for decreasing the total weight up to 5 kg.

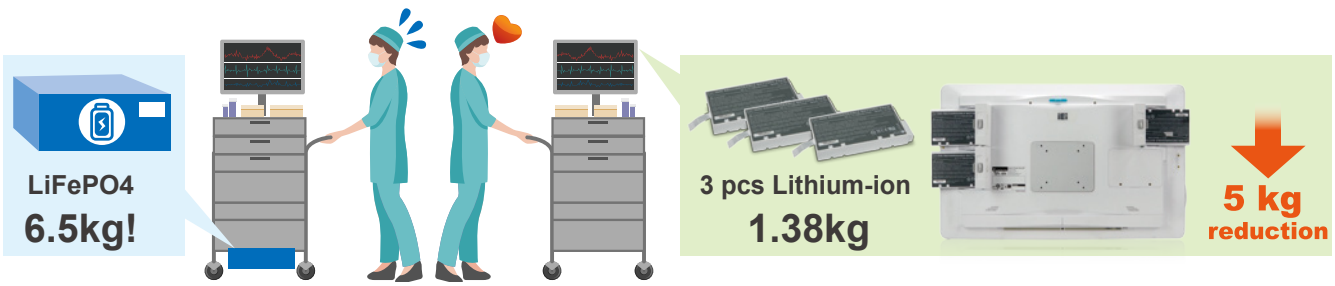

• Highly Integration

The POCm series product is a highly integrated panel PC. When building a mobile working station, the easy installation steps prevent you from facing the trouble of integrating different components and messy cabling.

• Cost Effective

The typical price range of nursing cart battery is more than USD 600 (after service included). Our anti-bacteria battery saves more than USD 400 cost. Charging dock design meets the need of medical context and relieves the waste of time and efforts going back and forth between nursing station and ward.

Specifications

Model		POCm-W22C-ULT3	POCm-W24C-ULT3
LCD Specifications	LCD Size	21.5'' (16:9)	23.8"
	Max. Resolution (W / H)	1920 x 1080	1920 x 1080
	Brightness (cd/m²)	250	250
	Contrast Ratio	1000:1	1000:1
	LCD Color	16.7M colors (RGB 6-bit)	16.7M colors (RGB 6-bit)
	Pixel Pitch (H / V)	0.24825 x 0.24825 mm	0.2745 x 0.2745 mm
	Viewing Angle (H / V)	170° / 160°	178° / 178°
	Backlight MTBF (hrs)	30,000 (LED backlight)	30,000 (LED backlight)
Touch	Touchscreen	Projected capacitive type with 10-point multi-touch	Projected capacitive type with 10-point multi-touch
	Touch Controller	EETI	EETI
	Surface Hardness	6H	6H
System	CPU Support	6th Gen Intel® mobile ULT Core™ i7-6600U / Core™ i5-6300U / Celeron® 3855U	6th Gen Intel® mobile ULT Core™ i7-6600U / Core™ i5-6300U / Celeron® 3855U
	LAN Controller	1 x Intel® I211 Ethernet Controller 1 x Intel® I219 Ethernet Controller (AMT 12.x supported by i7/i5 SKUs)	1 x Intel® I211 Ethernet Controller 1 x Intel® I219 Ethernet Controller (AMT 12.x supported by i7/i5 SKUs)
	RAM	Two 260-pin 2400/2133MHz dual-channel DDR4 SO-DIMM, 4GB pre-installed (system max. 32GB)	Two 260-pin 2400/2133MHz dual-channel DDR4 SO-DIMM, 4GB pre-installed (system max. 32GB)
	Storage	1 x 2.5" Accessible SATA HDD bay 2 x 2280 M key (PCIe x1/SATA) with RAID	1 x 2.5" Accessible SATA HDD bay 2 x 2280 M key (PCIe x1/SATA) with RAID
	Audio	2 x 2W speaker	2 x 2W speaker
	Camera & Microphone	5-megapixel CMOS front-facing camera with auto-focus and digital microphone	5-megapixel CMOS front-facing camera with auto-focus and digital microphone
	I/O Port	Bottom 1 x DC Jack 1 x Digital Mic 2 x HDMI output 2 x GbE LAN port 2 x RS-232/422/485 4 x USB 3.2 Gen 1 port	Side 1 x Mic in 1 x Audio out 2 x USB 2.0 port
	OSD Function	1 x System on/off 1 x Volume up 1 x Volume down	1 x Brightness up 1 x Brightness down 1 x LCD on/off and touch lock for cleaning
	Expansion	1 x Full-size/half-size PCIe Mini (PCIe+USB)	1 x Full-size/half-size PCIe Mini (PCIe+USB)
	LED	1 x RFID indicator 1 x Power indicator 3 x Battery indicator (color: blue/red)	1 x RFID indicator 1 x Power indicator 3 x Battery indicator (color: blue/red)
	Wi-Fi & Bluetooth	IEEE 802.11 a/b/g/n/ac 2T2R module with BT V4.2 (M.2 2230 A-E key)	IEEE 802.11 a/b/g/n/ac 2T2R module with BT V4.2 (M.2 2230 A-E key)
Physical	Construction Material	ABS+PC plastic with anti-bacterial material	ABS+PC plastic with anti-bacterial material
	Mounting	Wall, Stand and Arm VESA 75/100	Wall, Stand and Arm VESA 75/100
	Weight (Net / Gross)	7.07 kg without batteries / 8.43 kg with 3 batteries	8.18 kg without batteries / 9.53 kg with 3 batteries
	Dimensions (LxWxH)	543 x 71 x 350 mm	594.6 x 71 x 379.6 mm
Environment	Operating Temperature	0°C~40°C	0°C~40°C
	Storage Temperature	-20°C~60°C	-20°C~60°C
	Humidity	10% to 90% (non-condensing)	10% to 90% (non-condensing)
	Vibration	1G	1G
	Shock	Operating shock: 5G peak acceleration (11ms duration) Non-operating shock: 10G peak acceleration (11ms duration)	Operating shock: 5G peak acceleration (11ms duration) Non-operating shock: 10G peak acceleration (11ms duration)
	IP Level	Front: IP65, Back: IP32	Front: IP65, Back: IP32
	Thermal	Fanless	Fanless
Power	Power Input	19V DC input	19V DC input
	Power Adapter	150W medical power adapter	150W medical power adapter
	Battery	3 slots for Li-ion battery pack	3 slots for Li-ion battery pack
Certification	EMC & Safety	CE, FCC Class B Part 18 IEC 60601-1-2: 2014 (Edition 4.0) IEC 60601-1:2005+AMD1:2012 (Edition 3.1)	CE, FCC Class B Part 18 IEC 60601-1-2: 2014 (Edition 4.0) IEC 60601-1:2005+AMD1:2012 (Edition 3.1)

Ordering Information

Part No.		Description
22”	POCm-W22C-ULT3-C/PC/4G-R11	21.5” 250cd/m² FHD medical panel PC with 6th generation 14nm Intel® mobile Celeron® 3855U (15W) 1.6GHz on-board processor (ULT), one 4GB DDR4 RAM, 802.11a/b/g/n/ac Wi-Fi module, PCAP touchscreen, 5-megapixel camera, microphone, w/o battery, R11
	POCm-W22C-ULT3-i5/PC/4G-R11	21.5” 250cd/m² FHD medical panel PC with 6th generation 14nm Intel® mobile Core™i5-6300U (15W) 2.4GHz on-board processor (ULT), one 4GB DDR4 RAM, 802.11a/b/g/n/ac Wi-Fi module, PCAP touchscreen, 5-megapixel camera, microphone, w/o battery, R11
	POCm-W22C-ULT3-i7/PC/4G-R11	21.5” 250cd/m² FHD medical panel PC with 6th generation 14nm Intel® mobile Core™i7-6600U (15W) 2.6GHz on-board processor (ULT), one 4GB DDR4 RAM, 802.11a/b/g/n/ac Wi-Fi module, PCAP touchscreen, 5-megapixel camera, microphone, w/o battery, R11
24”	POCm-W24C-ULT3-C/PC/4G-R10	24” 250cd/m² FHD medical panel PC with 6th generation 14nm Intel® mobile Celeron® 3855U (15W) 2.4GHz on-board processor (ULT), one 4GB DDR4 RAM, 802.11a/b/g/n/ac Wi-Fi module, PCAP touchscreen, 5-megapixel camera, microphone, w/o battery, R10
	POCm-W24C-ULT3-i5/PC/4G-R10	24” 250cd/m² FHD medical panel PC with 6th generation 14nm Intel® mobile Core™i5-6300U (15W) 2.4GHz on-board processor (ULT), one 4GB DDR4 RAM, 802.11a/b/g/n/ac Wi-Fi module, PCAP touchscreen, 5-megapixel camera, microphone, w/o battery, R10
	POCm-W24C-ULT3-i7/PC/4G-R10	24” 250cd/m² FHD medical panel PC with 6th generation 14nm Intel® mobile Core™i7-6600U (15W) 2.6GHz on-board processor (ULT), one 4GB DDR4 RAM, 802.11a/b/g/n/ac Wi-Fi module, PCAP touchscreen, 5-megapixel camera, microphone, w/o battery, R10

Options

Part No.	Description
MEDP-TPM-R10	Trusted platform module kit, IEI assembly only
MEDP-HSBAT-R10	3S3P Li-ion battery pack, 11.1V, 7800mAh (for eco packing, the order should be at least 14 pcs per box or multiple of 14 pcs)
POCm-DOCKING-6BAY-R10	6-slot battery charger, LED indicator, 15V/280W power adapter
POCm-W22C-ULT3-W10E64-V-R10	OS image with 64bit Windows 10 IOT Enterprise for POCm series, with DVD-ROM
POCP-CC05-R10	Cable cover, white, plastic, R10
31603-000069-RS	3S3P Li-ion battery pack, 11.1V, 7800mAh, ATO only

IQ Mounting Options

Item	Part No.
Wall Mount Kit	AFLWK-19B
Arm	ARM-31-RS
Stand	STAND-A21-R10

Packing List

Item	Q’ty	Remark
Power Adapter	1	150W medical power adapter
Power Cord	1	European power cord, 183 cm, C13

POCm-W22C-ULT3 / POCm-W24C-ULT3
I/O Interface

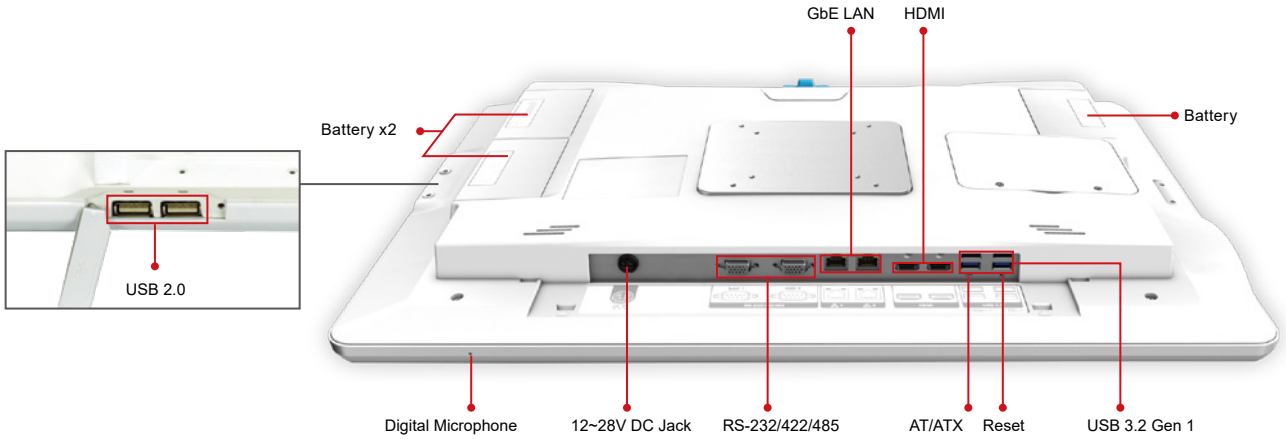

POCm-W22C-ULT3
Dimensions (Unit: mm)

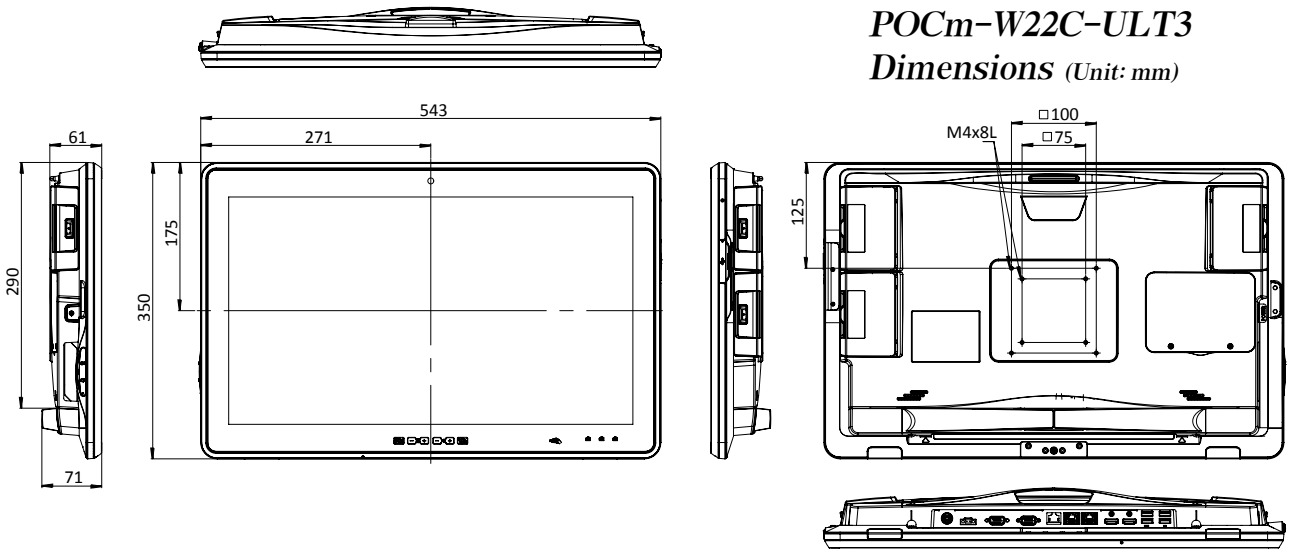

POCm-W24C-ULT3
Dimensions (Unit: mm)

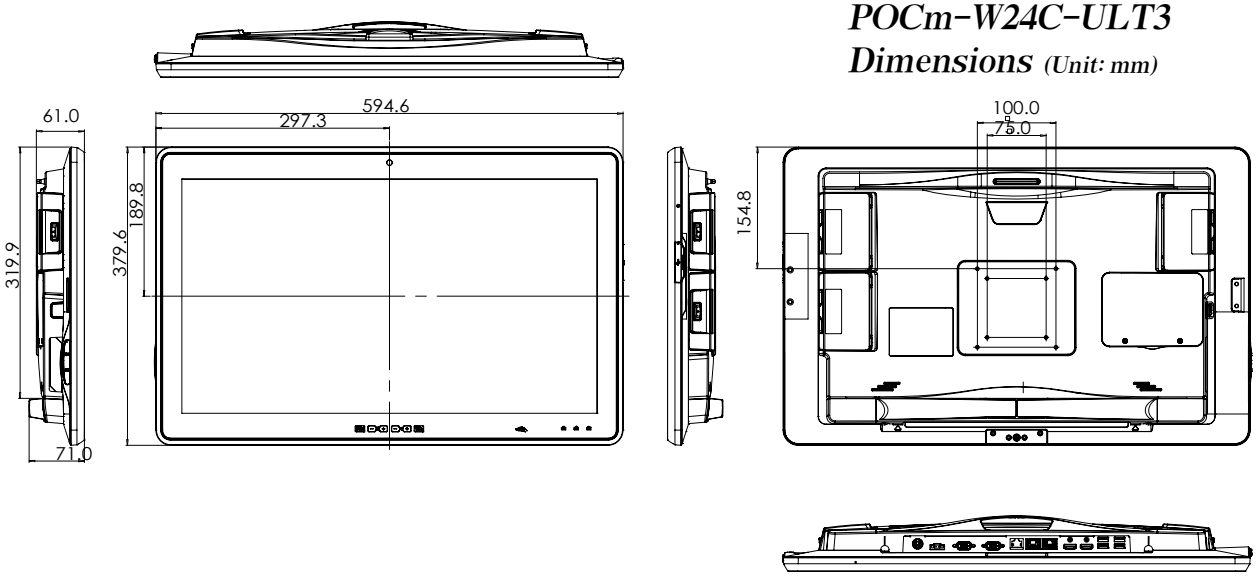

Intelligent Point-of-Care Terminal

NEW

POCi-W22C-ULT5
POCi-W24C-ULT5

22” / 24" Medical Panel PC with 8th Generation Intel® mobile ULT Core™ i7/i5 processor

Features

- Dual reading light
- Chemical etching AG coating
- Modular PCIe x4 expansion slot
- Aluminum front bezel (IP66) & PC/ABS rear cover
- FHD IPS panel with optional DICOM preset module
- 14nm 8th generation Intel® Whiskey Lake U platform



Intel® Whiskey lake | Wi-Fi | RFID | 10-Point | Modular PCIe x4 | Isolated I/O | Ultra Slim | DICOM Module | Reading light | Chemical Etching AG Coating

• Intelligent Working Station

The POCi series is a medical panel PC featuring AI, edge computing with rich expansion functions. It is ideal to work in many kinds of medical scenario such as radiology, telemedicine, endoscopy system or surgical working station.

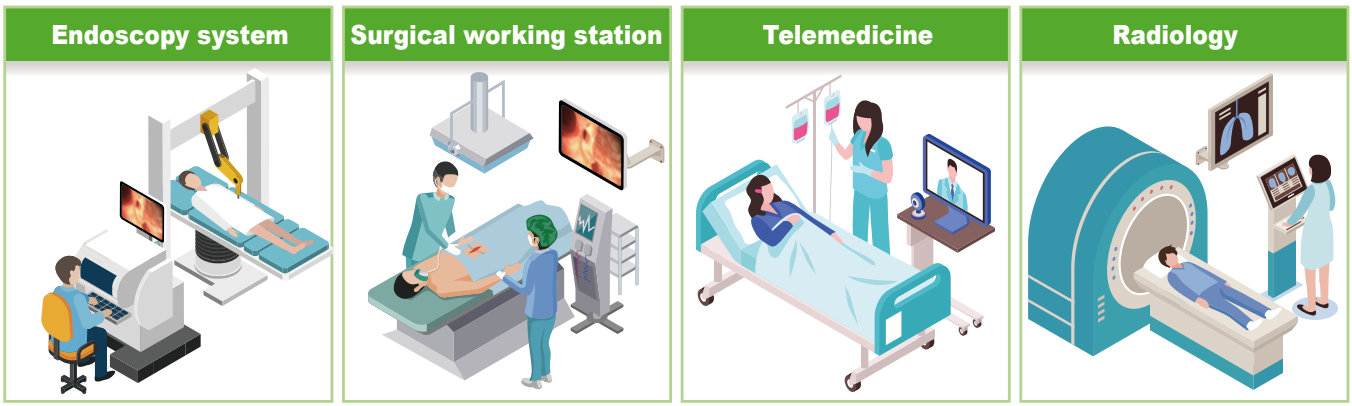

• IPS Panel with Chemical Etching AG Coating Glass

High-performance IPS panel enables a wider 178° viewing angles and advanced visual performance. The chemical etching AG coating reduces the watching fatigue resulting from glare or any other light interference in different kinds of environments.

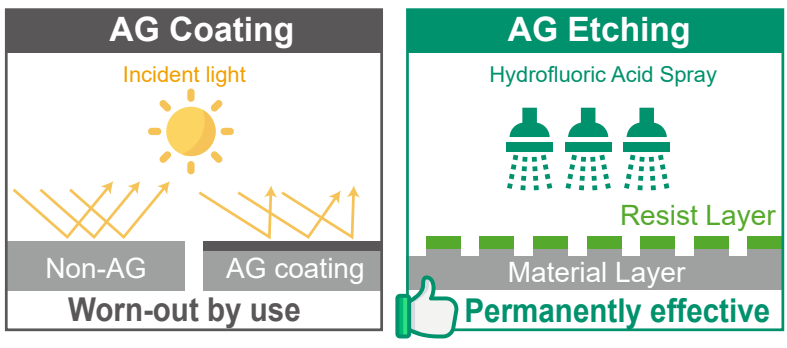

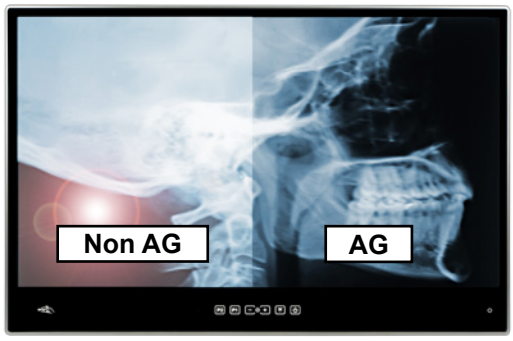

Intelligent Point of Care Terminal

• Ultra-slim Aluminum Front Bezel

The ultra-slim front bezel creates a premium user experience. This design lets the medical personnel more focus on the clinical information displayed on the screen.



• Optional DICOM Preset

The way the human eye responds to contrasts in light levels is not linear. At low levels, we can notice small changes in luminance. At higher luminance, the change needs to be much greater before we perceive the difference from one level to the next. Calibration of the display system is important to ensure that each image is shown consistently every time it is viewed.



• Dual Reading Lights

The IEC 62471 compliant LEDs assure the reading light emits comfortable and safe light for human eyes. Easy adjustable dimming interface allows the user to choose the best brightness in different situations.





• Isolated I/O Ports

These 1.5kV isolated COM & LAN ports are compliant to the MOOP classification and use UL94 V-0 Flammability Standard Mylar® sheet insulation.



• ESD Protection

IEI provides Electrostatic discharge (ESD) 15kV (air) and 8kV (contact) ESD Protection. It can protect the circuit of a device from an Electrostatic discharge (ESD), in order to prevent malfunction of device.

• Chemical Resistance for Easy Sterilization

Sterilization is a daily routine of hospitals. Aluminum front frame is not only lightweight but also very durable for chemical erosion. The PC/ABS back cover is also carefully selected and proved to be resistant to the commonly seen detergents.

Cleaners / Disinfectants



Cavi Wipes | Protex Wipes | Sani-cloth Wipes | Bleach | Alcohol | Virkon® S

High-Level Disinfectants



Cidex | Cidex OPA | Metricide 14 | Metricide 28 | Wavicide

• IP Protection

IP66 front bezel and cover are easy to be cleaned with cleaners.





True Flat OSD Hotkey Buttons

• True Flat OSD Hotkey Buttons

True flat OSD button design with no inaccessible corner brings conveniences for the cleaning personnel and increases cleaning efficiency.

• Wi-Fi 6 Module

The POCi-W22/24C-ULT5 supports the latest Wi-Fi 6 standard which enables more clients in dense environments and will provide a better experience for typical wireless LAN networks.

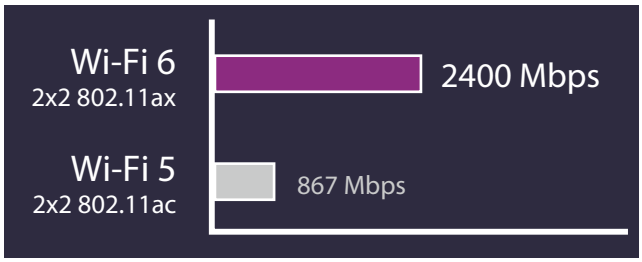

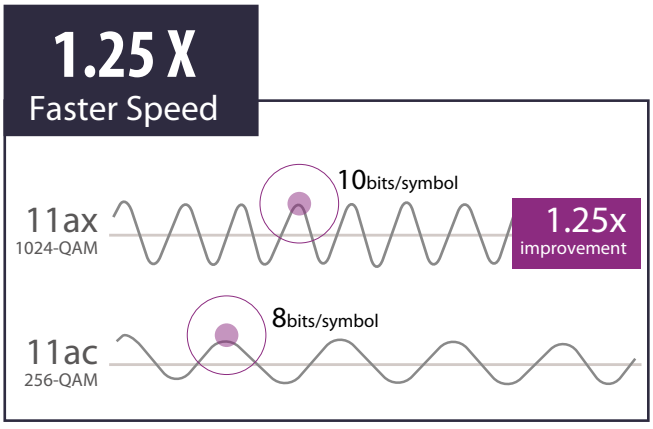

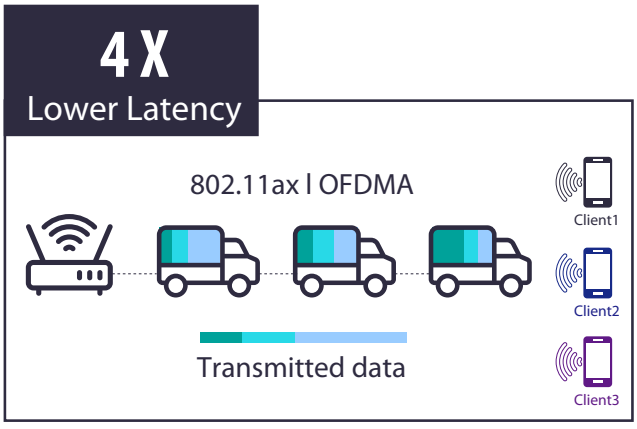

• Storage Device

The POCi-W22C-ULT5 provides flexible options for storage

- 2.5” HDD/SSD
- M.2 M key slot for NVMe, up to PCIe 3.0 x4

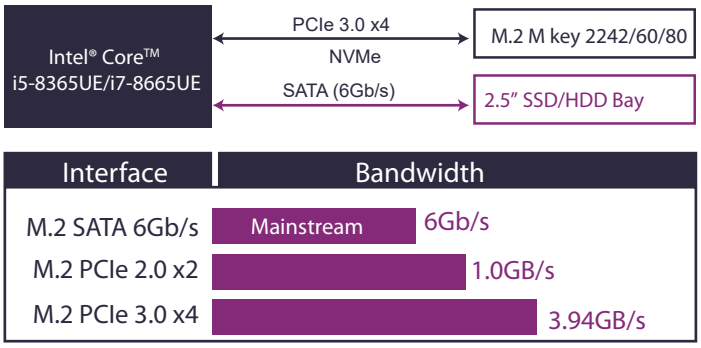

• Accessible HDD Cover & Cable Cover

Users can easily manage all the cables from the I/O ports, preventing splash to IO ports or messy cabling. Accessible HDD cover makes the IT maintenance job more efficient.

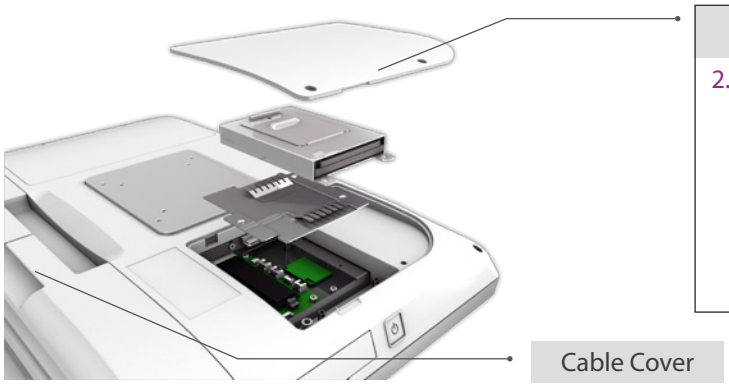

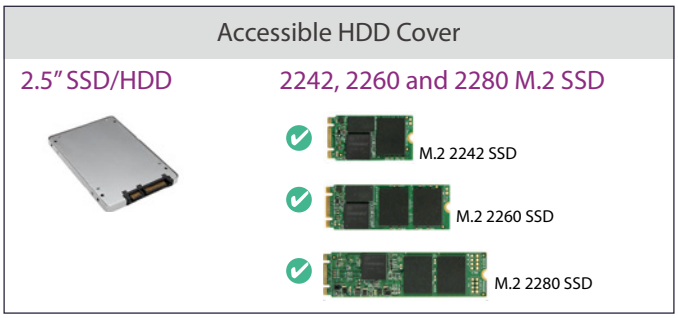

• Click-to-fix M.2 Slot

Special click-to-fix plunger design makes the M.2 replacing work much more convenient and prompt.

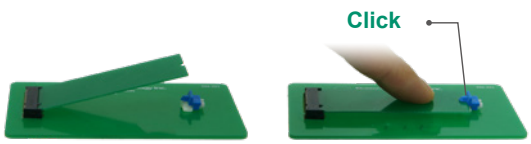

• Modular Expansion Design

The highly expandable PCIe x4 slot makes the whole system more flexible and easily meet the individual needs from different applications. For instance, adopting the AI accelerator card to enhance computing power, adding an all-in-one capture card to connect with medical devices, integrating PoE injector card with webcam, or expanding the desired I/O card for multiple usage.



• Optional Built-in Battery

Uninterruptible Power System (UPS) is widely used in medical industry for securing patient’s safety. The lateral expansion slot is available for a built-in battery which provides emergency power for 60 mins when the input source or main power fails under unexpected events.

* This feature needs to be requested before product shipment only and it will interfere with the lateral PCIe x4 expansion slot.

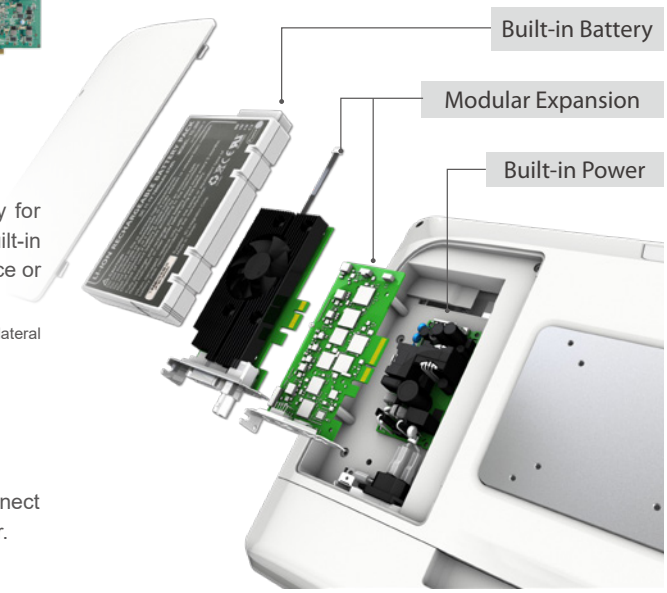

• Optional Built-in Power

To implement the built-in medical-grade power supply system, simply connect the power cord to the system without the use of an external power adapter.

Specifications

Model		POCi-W22C-ULT5	POCi-W24C-ULT5
LCD Specifications	LCD Size	21.5" (16:9)	23.8'' (16:9)
	Max. Resolution (W / H)	1920 x 1080	1920 x 1080
	Brightness (cd/m²)	250	250
	Contrast Ratio	1000:1	1000:1
	LCD Color	16.7M RGB 6-bit (Hi-FRC)	16.7M RGB 6-bit (Hi-FRC)
	Pixel Pitch (H / V)	0.24795 x 0.24795 mm	0.2745 × 0.2745 mm
	Viewing Angle (H / V)	178˚ / 178˚	178˚ / 178˚
	Backlight MTBF (hrs)	30,000 (LED backlight)	30,000 (LED backlight)
Touch	Touchscreen	Projected capacitive type with 10-point multi-touch	Projected capacitive type with 10-point multi-touch
	Touch Controller	EETI (80H84)	EETI (80H84)
	Surface Hardness	6H	6H
	Coating	Chemical etching AG	Chemical etching AG
System	CPU Support	Intel® Core™ i7-8665UE (Whiskey Lake ULT platform) Intel® Core™ i5-8365UE (Whiskey Lake ULT platform)	Intel® Core™ i7-8665UE (Whiskey Lake ULT platform) Intel® Core™ i5-8365UE (Whiskey Lake ULT platform)
	LAN Controller	1 x Intel® I211 Ethernet Controller 1 x Intel® I219 Ethernet Controller (AMT 12.x supported by i7/i5 SKUs)	1 x Intel® I211 Ethernet Controller 1 x Intel® I219 Ethernet Controller (AMT 12.x supported by i7/i5 SKUs)
	RAM	Two 260-pin 2400/2133MHz dual-channel DDR4 SO-DIMM, 4GB pre-installed (System max. 64GB)	Two 260-pin 2400/2133MHz dual-channel DDR4 SO-DIMM, 4GB pre-installed (System max. 64GB)
	Storage	1 x M.2 2242/60/80 M key (PCIe x4) 1 x 2.5” accessible SATA HDD/SSD bay	1 x M.2 2242/60/80 M key (PCIe x4) 1 x 2.5” accessible SATA HDD/SSD bay
	Audio	2 x 2W speaker	2 x 2W speaker
	I/O Port	Bottom 1 x DC jack 1 x HDMI 1.4 output 1 x Isolated 1.5kV RS-232 1 x Combo audio-out / mic-in 1 x Isolated Gigabit LAN (I211) 1 x Isolated Gigabit LAN (I219 supports Intel® vPro) 4 x USB 3.2 Gen 2 port	Side 2 x USB 2.0 port
	OSD Function	1 x Power on/off 1 x Reading light on/off 1 x Backlight brightness up	1 x Backlight brightness down 1 x Clean mode on/off 1 x DICOM mode app on/off (optional)
	Expansion	1 x PCIe x4	1 x PCIe x4
	LED	1 x RFID indicator (optional) 2 x LED reading light	1 x RFID indicator (optional) 2 x LED reading light
	Wi-Fi & Bluetooth	IEEE 802.11 ax 2T2R module (Wi-Fi 6 Module) with BT V5.0 (M.2 2230 A-E key)	IEEE 802.11 ax 2T2R module (Wi-Fi 6 Module) with BT V5.0 (M.2 2230 A-E key)
Physical	Construction Material	Front bezel: Aluminum die-casting Rear cover: ABS+PC plastic (chemical resistant)	Front bezel: Aluminum die-casting Rear cover: ABS+PC plastic (chemical resistant)
	Mounting	Wall, Stand and Arm VESA 75/100	Wall, Stand and Arm VESA 75/100
	Weight (Net)	6.9 kg	8.1 kg
	Dimensions (LxWxH)	507.5 x 64.5 x 335.5 mm	567 x 63.9 x 370.6 mm
Environment	Operating Temperature	0°C~40°C	0°C~40°C
	Storage Temperature	-20°C~60°C	-20°C~60°C
	Humidity	10% to 95% (non-condensing)	10% to 95% (non-condensing)
	Vibration	1G	1G
	Shock	Operating shock: 5G peak acceleration (11ms duration) Non-operating shock: 15G peak acceleration (11ms duration)	Operating shock: 5G peak acceleration (11ms duration) Non-operating shock: 15G peak acceleration (11ms duration)
	IP Level	Front: IP66	Front: IP66
	Thermal	Fanless	Fanless
Power	Power Input	19V DC input	19V DC input
	Power Adapter	150W medical power adapter	150W medical power adapter
	Battery	3S3P Li-ion battery pack, 11.1V, 7800mAh (optional)	3S3P Li-ion battery pack, 11.1V, 7800mAh (optional)
	Built-in Medical Power	150W, 85~264 VAC, medical power supply (optional)	150W, 85~264 VAC, medical power supply (optional)
Certification	EMC & Safety	CE, FCC Class B Part 18 EN 60601-1-2: 2015 (Edition 4.0) EN 60601-1:2006/A1:2013 (Edition 3.1)	CE, FCC Class B Part 18 EN 60601-1-2: 2015 (Edition 4.0) EN 60601-1:2006/A1:2013 (Edition 3.1)

Ordering Information

Part No.		Description
22”	POCi-W22C-ULT5-i5/PC/4G-R10	21.5” 250cd/m² FHD medical panel PC with 8th generation 14nm Intel® mobile Core™ i5-8365UE (15W) 1.6GHz on-board processor (ULT), one 4GB DDR4 RAM, 802.11 ax Wi-Fi module, PCAP touchscreen w/ AG coating, microphone, R10
	POCi-W22C-ULT5-i5/PC/4G-B-R10 *	21.5” 250cd/m² FHD medical panel PC with 8th generation 14nm Intel® mobile Core™ i5-8365UE (15W) 1.6GHz on-board processor (ULT), one 4GB DDR4 RAM, 802.11 ax Wi-Fi module, PCAP touchscreen w/ AG coating, microphone, w/ battery, R10
	POCi-W22C-ULT5-i5/PC/4G-BP-R10 *	21.5” 250cd/m² FHD medical panel PC with 8th generation 14nm Intel® mobile Core™ i5-8365UE (15W) 1.6GHz on-board processor (ULT), one 4GB DDR4 RAM, 802.11 ax Wi-Fi module, PCAP touchscreen w/ AG coating, microphone, w/ built-in power, R10
	POCi-W22C-ULT5-i7/PC/4G-R10 *	21.5” 250cd/m² FHD medical panel PC with 8th generation 14nm Intel® mobile Core™ i7-8665UE (15W) 1.7GHz on-board processor (ULT), one 4GB DDR4 RAM, 802.11 ax Wi-Fi module, PCAP touchscreen w/ AG coating, microphone, R10
	POCi-W22C-ULT5-i7/PC/4G-B-R10 *	21.5” 250cd/m² FHD medical panel PC with 8th generation 14nm Intel® mobile Core™ i7-8665UE (15W) 1.7GHz on-board processor (ULT), one 4GB DDR4 RAM, 802.11 ax Wi-Fi module, PCAP touchscreen w/ AG coating, microphone, w/ battery, R10
	POCi-W22C-ULT5-i7/PC/4G-BP-R10 *	21.5” 250cd/m² FHD medical panel PC with 8th generation 14nm Intel® mobile Core™ i7-8665UE (15W) 1.7GHz on-board processor (ULT), one 4GB DDR4 RAM, 802.11 ax Wi-Fi module, PCAP touchscreen w/ AG coating, microphone, w/ built-in power, R10
24”	POCi-W24C-ULT5-i5/PC/4G-R10	23.8” 250cd/m² FHD medical panel PC with 8th generation 14nm Intel® mobile Core™ i5-8365UE (15W) 1.6GHz on-board processor (ULT), one 4GB DDR4 RAM, 802.11 ax Wi-Fi module, PCAP touchscreen w/ AG coating, microphone, R10
	POCi-W24C-ULT5-i5/PC/4G-B-R10 *	23.8” 250cd/m² FHD medical panel PC with 8th generation 14nm Intel® mobile Core™ i5-8365UE (15W) 1.6GHz on-board processor (ULT), one 4GB DDR4 RAM, 802.11 ax Wi-Fi module, PCAP touchscreen w/ AG coating, microphone, w/ battery, R10
	POCi-W24C-ULT5-i5/PC/4G-BP-R10 *	23.8” 250cd/m² FHD medical panel PC with 8th generation 14nm Intel® mobile Core™ i5-8365UE (15W) 1.6GHz on-board processor (ULT), one 4GB DDR4 RAM, 802.11 ax Wi-Fi module, PCAP touchscreen w/ AG coating, microphone, w/ built-in power, R10
	POCi-W24C-ULT5-i7/PC/4G-R10 *	23.8” 250cd/m² FHD medical panel PC with 8th generation 14nm Intel® mobile Core™ i7-8665UE (15W) 1.7GHz on-board processor (ULT), one 4GB DDR4 RAM, 802.11 ax Wi-Fi module, PCAP touchscreen w/ AG coating, microphone, R10
	POCi-W24C-ULT5-i7/PC/4G-B-R10 *	23.8” 250cd/m² FHD medical panel PC with 8th generation 14nm Intel® mobile Core™ i7-8665UE (15W) 1.7GHz on-board processor (ULT), one 4GB DDR4 RAM, 802.11 ax Wi-Fi module, PCAP touchscreen w/ AG coating, microphone, w/ battery, R10
	POCi-W24C-ULT5-i7/PC/4G-BP-R10 *	23.8” 250cd/m² FHD medical panel PC with 8th generation 14nm Intel® mobile Core™ i7-8665UE (15W) 1.7GHz on-board processor (ULT), one 4GB DDR4 RAM, 802.11 ax Wi-Fi module, PCAP touchscreen w/ AG coating, microphone, w/ built-in power, R10

* By order production

Options

Item	Part No.	Description
RFID	MEDP-MF-RFID-R11	Mifare RFID reader, 13.56MHz, PN7362AUHN, with LED indicator, 250mm antenna cable, IEI assembly only
	7J006-RDR6021AKU-RS	RFID reader, 125KHz, RDR-6021AKU, IEI assembly only
DICOM	MEDP-DICOM-R10	DICOM engine for digital image processing, including image enhancement, color adjustment and panel compensation, IEI assembly only
PoE	GPoE-2P-R20	PCI Express Power over Ethernet card, 2-port 1000 Base(T), 802.3at compliant, low profile, RoHS
TPM	TPM-IN03-R10	20-pin Infineon SPI TPM 2.0 module, software management tool, firmware V7.63
Battery	31603-000069-RS	Battery pack; Li Ion; DPC; TC-202; SAMSUNG; ICR1865026J; 7800mAH; 11.1V; 3S3P; ATO only; CCL; RoHS

Packing List

Item	Q'ty	Remark
Power Adapter	1	150W medical power adapter
Power Cord	1	European power cord, 183 cm, C13

POCi-W22C-ULT5 / POCi-W24C-ULT5
I/O Interface

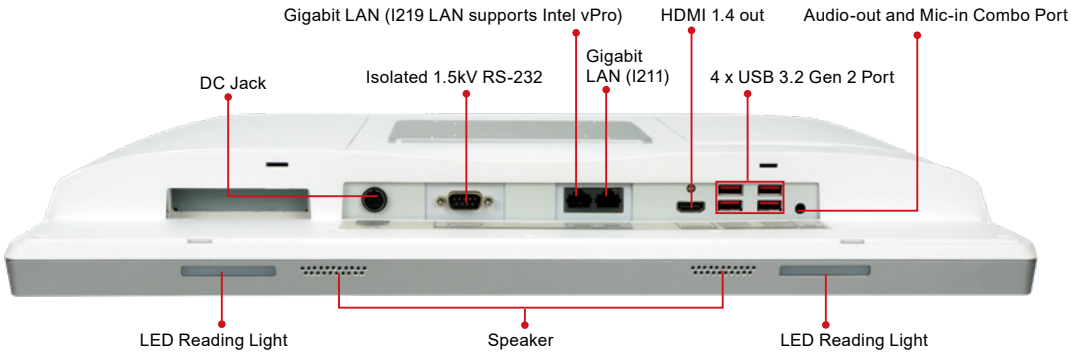

POCi-W22C-ULT5
Dimensions (Unit: mm)

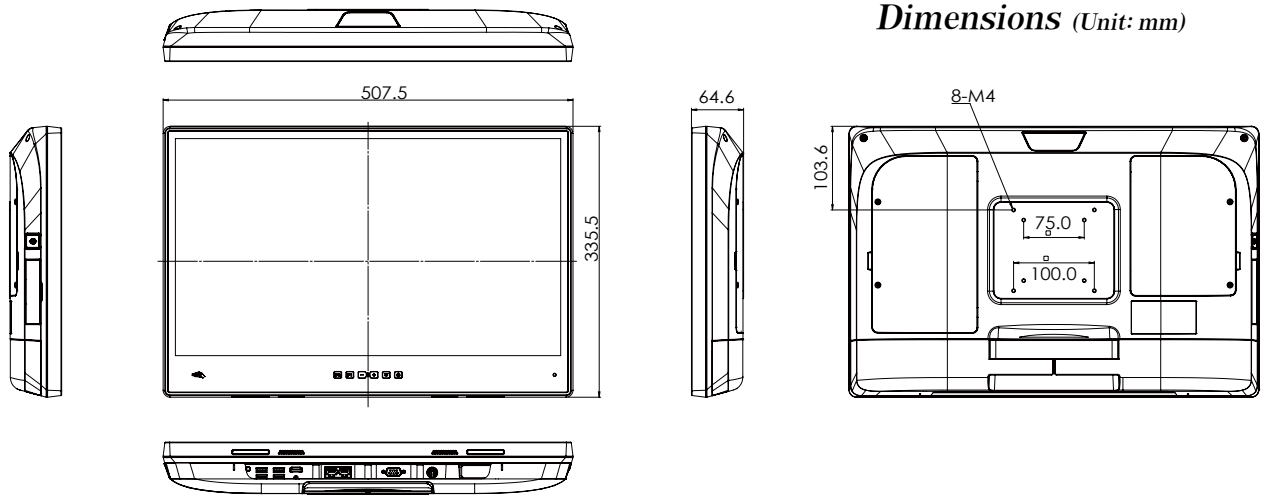

POCi-W24C-ULT5
Dimensions (Unit: mm)

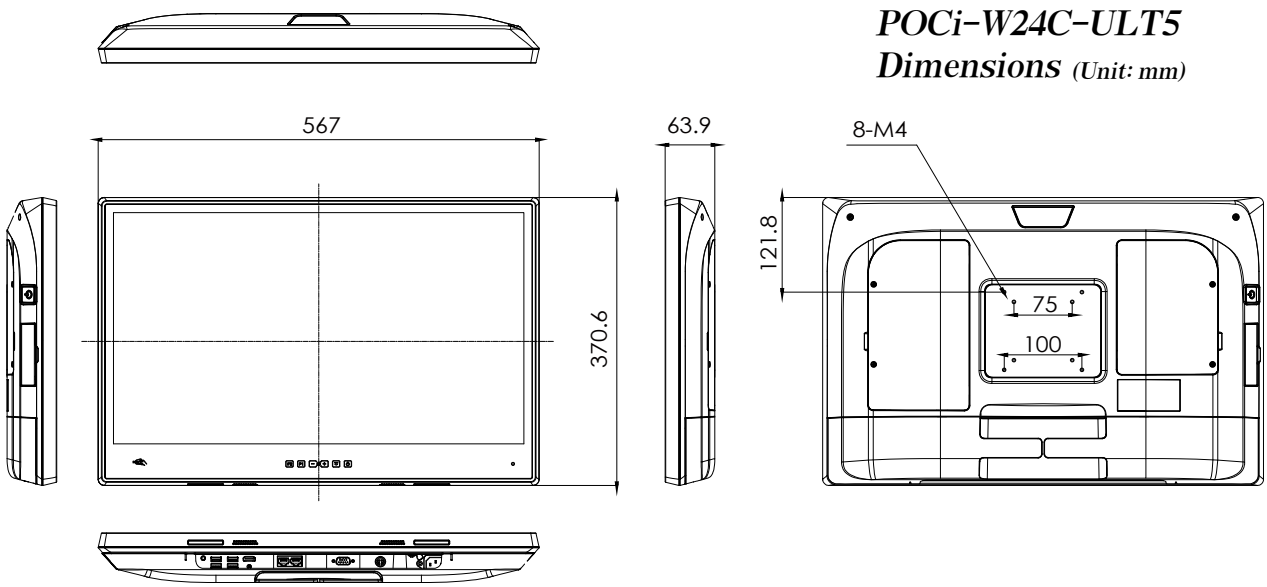

Medical Grade Box PC & Edge AI Computing

With the advance of medical technology, more and more computing systems are adopted by various healthcare professionals for EMR integration, AI computing, medical information transfer, HMI and various medical applications.

The entire HTB series is developed to help our global partners to tackle the foreseeable growing opportunities in hospital digitalization, precision medicine, and artificial intelligence in healthcare.

HTB-100



- Desktop CPU
- Isolated RS-232
- Optional PCIe x16 expansion slot
- Support up to three independent displays

The HTB-100 is a medical grade fanless system with Intel® desktop CPU. It can serve as a medical controller or a medical gateway.





HTB-210



- Smart fan design
- PCIe x16 slot for GPU cards
- Server grade & desktop CPU
- Small size for easy deployment
- PCIe x4 slot for expansion cards

It adopts Intel® Xeon® or Core™ processor and features smart fan control to minimize the noise generated by system thermal solution. It is a perfect AI landing platform for algorithm development or applications in startup companies.





Selection Guide





Series		HTB	
Model		HTB-100	HTB-210-Q470
Chassis	Color	Silver + Grayish blue	White
	Dimension (L x W x H)	294 x 209 x 90.2 mm	140 x 306.7 x 171 mm
	Thermal	Fanless	Smart Fan
	Chassis Construction	Extruded aluminum alloy	Metal Housing (SECC)
Motherboard	CPU	Intel® Core™ i5-6442EQ 6M Cache, up to 2.70 GHz, 25W Intel® Core™ i7-6822EQ 8M Cache, up to 2.80 GHz, 25W	i5-10500TE, 35W TDP (6 cores) i7-10700TE, 35W TDP (8 cores)
	GPU	-	-
	Chipset	Intel® Skylake HM170	Intel® Q470
	System Memory	1 x 4 GB pre-installed (system max: 32GB) 2 x 260-pin DDR4 SO-DIMM	Two 260-pin 2666/2133MHz Dual-Channel DDR4 SODIMM ECC & non-ECC unbuffered Memory supported up to 128GB
Storage	Hard Drive	1 x 2.5" SATA 6Gb/s HDD/SSD bay	1 x 2.5" SATA HDD/SSD bay
I/O Interfaces	USB	2 x USB 2.0 4 x USB 3.2 Gen 1	1 x USB Type C (USB/DP) 2 x USB 3.2 GEN1 2 x USB 2.0 (front side)
	Ethernet	2 x RJ-45 PCIe GbE by Intel® I211 controller	2 x Intel® I225-V PCIe controller (2.5GbE)
	COM port	2 x RS-232 (DB-9, with 2.5 kV isolation) 2 x RS-232/422/485 (DB-9, with 2.5 kV isolation)	1 x RS-232/422/485
	Display	1 x VGA, 1 x HDMI 2.0, 1 x iDP (optional)	1 x HDMI (up to 4096 x 2304@30Hz)
	Resolution	VGA: Up to 1920 x 1200@60Hz HDMI 2.0: Up to 4096 x 2160@60Hz	-
	Audio	Realtek ALC662, 5.1-channel High Definition Audio (HDA) 1 x Line-in, 1 x Line out, 1 x Mic-in	-
	Wireless	1 x 802.11a/b/g/n/ac 2T2R (optional)	-
	Others	-	1 x Power button 1 x Reset switch 1 x AT/ATX switch
Expansions	PCIe	1 x PCIe x16	1 x PCIe 3.0 x4 slot 1 x PCIe 3.0 x16 slot
	PCIe Mini	1 x Half-size PCIe Mini 1 x Full-size PCIe Mini (supports mSATA, colay with SATA)	-
	M.2	1 x 1630/2230/3030 A-E key (PCIe x2/USB 2.0)	1 x M.2 A key (2230) 2 x M.2 M key (2280/2242)
	Acceleration Card (Optional)	-	NVIDIA Tesla T4 (75W) Quadro P2200 (75W)
	Security	-	-
Power	Power Input	12~28V DC	19V DC
	Power Consumption	19V@4.4A (Intel® Core™ i7-6822EQ with 4 GB memory)	-
	Adapter	Adapter Power; Vin: 90~264VAC; Vout: 19VDC; 150W	100V~240V AC input, 19V DC output, 230W
Reliability	Mounting	Wall mounting	0°C~40°C
	Operating Temperature	0°C~40°C with air flow (SSD)	10%~95% (Non-condensing)
	Operating Humidity	10%~95% (non-condensing)	-
	Storage Temperature	-40°C~70°C with air flow (SSD)	-20°C~60°C
	Storage Humidity	10% ~ 90% (non-condensing)	-
	Operating Shock	Half-sine wave shock 5G; 11ms; 100 shocks per axis	Half-sine wave shock 5G, 11ms, 100 shocks per axis
	Operation Vibration	MIL-STD-810G 514.6 C-1 (with SSD)	MIL-STD-810G 514.6C-1 (with SSD)
	Weight (Net / Gross)	2.2 kg / 3.0 kg	2.8 Kg
Certification	Safety / EMC	CE IEC 62304 IEC 60601-1 V3.1 IEC 60601-1-2 V4.0 ISO 14971:2007 FCC class B part 18	UL/ cUL FCC Part15B EN 62368-1 Ed.2 + RMF EN 55032 + EN 55035
OS	Supported OS	Microsoft® Windows 8, Microsoft® Embedded Standard 7	Windows®10, Linux®
	File System	-	-

Medical Box PC

HTB-100-HM170 | Fanless Quad Core Box PC

Features

- Triple independent display with high resolution support
- Isolated COM ports for enhancing safety among devices
- Optional PCIe x16 expansion slot supports more flexible functions
- Medical grade with high performance fanless embedded computing
- 6th Gen Intel® Core™ processor platform with Intel® HM170 chipset and DDR4 memory



Fanless | DDR4 | M.2 | Triple Display | Isolated COM Port | Waterproof Top Cover

Smart & Friendly Design

Isolated COM ports, rich I/O interface, and multiple expansions are built in to the HTB-100. The intelligent HTB-100 medical computing system will meet all demands from the medical applications.



• Compliant with medical standards

The HTB-100 is compliant with medical standards, including IEC 60601-1 V3.1, IEC 60601-1-2 V4.0, IEC 62304, IEC 62366, ISO 14971 and FCC part 18 class B, making the medical environment more reliable.

• Flexible expansion

The flexible expansion is one of the advantages of the HTB-100 for medical applications. The HTB-100 reserves a PCIe x16 slot for add-on card expansions, such as capture card for medical imaging inspection during surgery.

• Waterproof top cover

The HTB-100 is equipped with a waterproof top cover in order to prevent any damage from cleaning or liquid which may indirectly affect patients. The HTB-100 can meet flat design and reduce maintenance effort.

• Cable cover for easy cabling

The cable cover protects the HTB-100 from dust and liquid ingress, and allows the medical staff to easily manage all the cables from the I/O ports, making the cleaning process more convenient in medical environment.



Powerful system design capability with innovative technology



● Isolated COM ports for safety protection

The COM ports support 2.5kV isolation that meets medical standard (IEC 60601-1-2 V4.0). The isolated ports can increase safety on device designed for medical environment, and provide comprehensive protection against electrical surges for patients and medical staffs.

● Fanless and easy maintenance

The HTB-100 is a fanless embedded system, and the heatsink is situated on the bottom side. The design makes the HTB-100 an easy-to-clean and reliable system for the medical environment.

● Ground pin to prevent harm to patients and medical staffs

The perfect grounding pin design can avoid electric current flowing from the HTB-100 to vital devices which connect to patients, and to avoid the current damage from other devices.

● Easy mounting design

Various mounting methods such as desktop and wall mount are supported for easy use in medical environment. The provided flexible mounting bracket can be oriented 180 degrees to change from desktop to wall mount.



Specifications

Model		HTB-100
Chassis	Color	Silver + Grayish blue
	Dimension (L x W x H)	294 x 209 x 90.2 mm
	Thermal	Fanless
	Chassis Construction	Extruded aluminum alloy
Motherboard	CPU	Intel® Core™ i7-6822EQ 8M Cache, up to 2.80 GHz, 25W Intel® Core™ i5-6442EQ 6M Cache, up to 2.70 GHz, 25W
	Chipset	Intel® Skylake HM170
	System Memory	1 x 4 GB pre-installed (system max: 32GB) 2 x 260-pin DDR4 SO-DIMM
Storage	Hard Drive	1 x 2.5" SATA 6Gb/s HDD/SSD bay
I/O Interfaces	USB	2 x USB 2.0 4 x USB 3.2 Gen 1
	Ethernet	2 x RJ-45 PCIe GbE by Intel® I211 controller
	COM port	2 x RS-232 (DB-9, with 2.5 kV isolation) 2 x RS-232/422/485 (DB-9, with 2.5 kV isolation)
	Display	1 x VGA, 1 x HDMI 2.0, 1 x iDP (optional)
	Resolution	VGA: Up to 1920 x 1200@60Hz HDMI 2.0: Up to 4096 x 2160@60Hz
	Audio	Realtek ALC662, 5.1-channel High Definition Audio (HDA) 1 x Line-in, 1 x Line out, 1 x Mic-in
	Wireless	1 x 802.11a/b/g/n/ac 2T2R (optional)
Expansions	PCIe	1 x PCIe x16
	PCIe Mini	1 x Half-size PCIe Mini 1 x Full-size PCIe Mini (supports mSATA, colay with SATA)
	M.2	1 x 1630/2230/3030 A-E key (PCIe x 2/USB 2.0)
Power	Power Input	12~28V DC
	Power Consumption	19V@4.4A (Intel® Core™ i7-6822EQ with 4 GB memory)
	Adapter	Adapter Power; Vin: 90~264VAC; Vout: 19VDC; 150W Dim: 85 x 170 x 42.5 mm; Plug=6.5mm; Cable=1200mm; Medical; Din 4 Pin/lock; CCL; R10
Reliability	Mounting	Wall mounting
	Operating Temperature	0°C~40°C with air flow (SSD)
	Operating Humidity	10%~95% (non-condensing)
	Storage Temperature	-40°C~70°C with air flow (SSD)
	Storage Humidity	10% ~ 90% (non-condensing)
	Operating Shock	Half-sine wave shock 5G; 11ms; 100 shocks per axis
	Operation Vibration	MIL-STD-810G 514.6 C-1 (with SSD)
	Weight (Net / Gross)	2.2 kg / 3.0 kg
Certification	Safety / EMC	CE IEC 62304 IEC 60601-1 V3.1 IEC 60601-1-2 V4.0 ISO 14971:2007 FCC class B part 18
OS	Supported OS	Microsoft® Windows 8, Microsoft® Embedded Standard 7

Ordering Information

Part No.	Description
HTB-100-HM170-i5/4G-R10	Ruggedized fanless embedded system with Intel® Core™ i5-6442EQ 1.9 GHz (up to 2.7 GHz, quad core, TDP 25W), 4GB DDR4 pre-installed memory, one PCIe x16 expansion, VGA/HDMI/iDP, COM port, 12~28V DC, Adapter Power; Vin:90~264VAC; 150W; Dim:85*170*42.5mm; Plug=6.5mm; Cable=1200mm; Medical; Vout:19VDC; Din 4Pin/lock; CCL; R10
HTB-100-HM170-i7/4G-R10	Ruggedized fanless embedded system with Intel® Core™ i7-6822EQ 2.0 GHz (up to 2.8 GHz, quad core, TDP 25W), 4GB DDR4 pre-installed memory, one PCIe x16 expansion, VGA/HDMI/iDP, COM port, 12~28V DC, Adapter Power; Vin:90~264VAC; 150W; Dim:85*170*42.5mm; Plug=6.5mm; Cable=1200mm; Medical; Vout:19VDC; Din 4Pin/lock; CCL; R10

Options

Part No.	Description
41008-0803K6-00-RS	Cable COVER; HTB-100ME; White; R10

Packing List

1 x Chassis Screw	1 x Mounting Bracket

I/O Interface

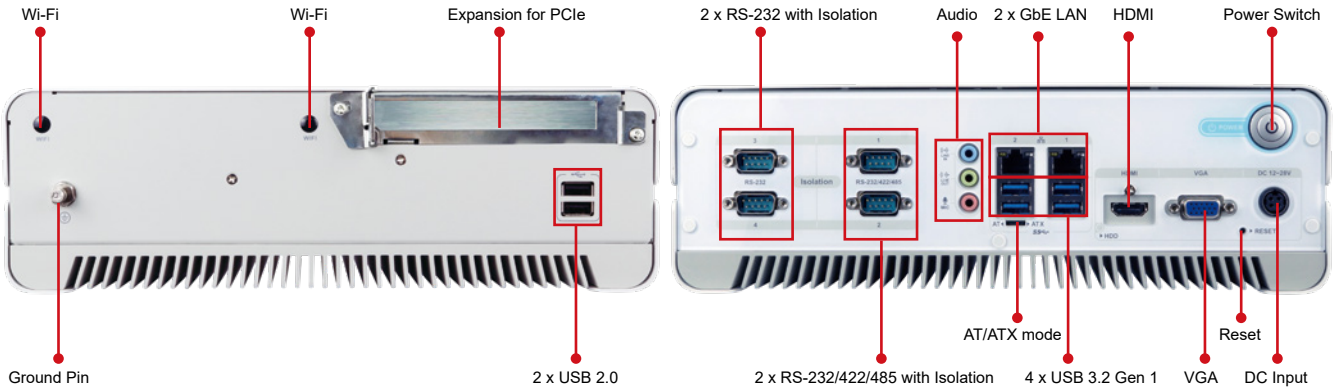

HTB-100-HM170 Dimensions (Unit: mm)

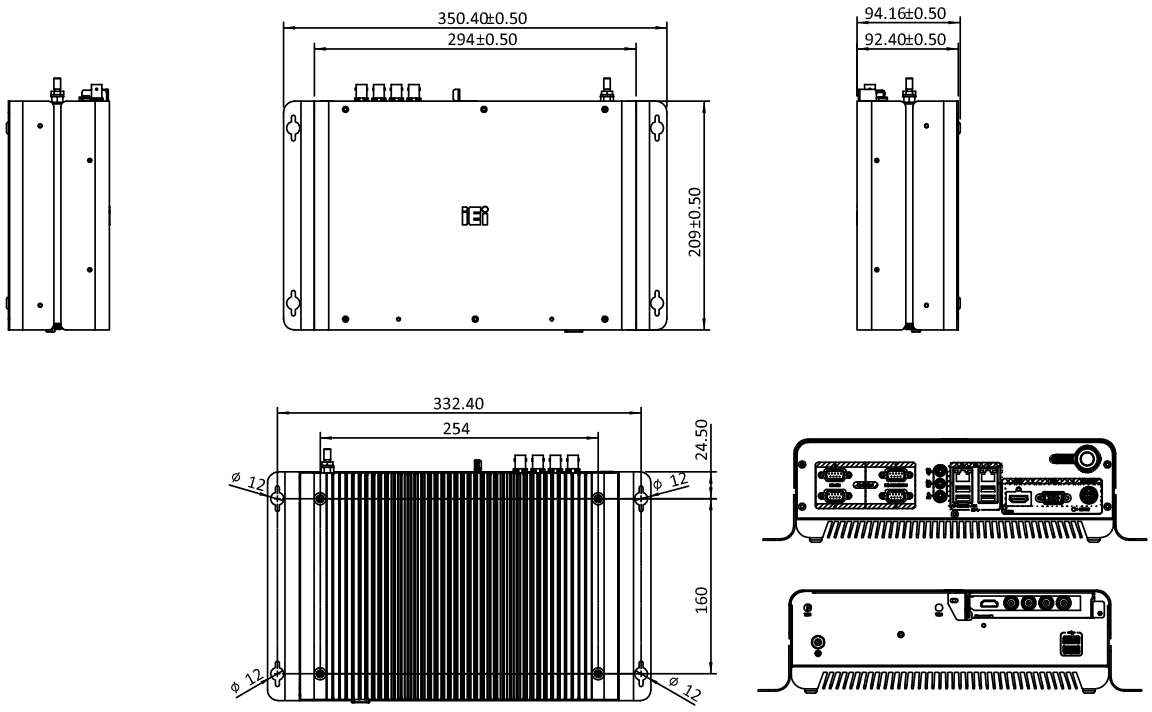

AI Box PC

NEW

HTB-210-Q470 | 10th Gen Intel® Core™ processor

Features

- 10th Gen Intel® Xeon® & Core™ processor platform with Intel® Q470 chipset
- PCIe x4 slot supports capture cards or other applications
- Compact edge device with great computing & graphics performance
- PCIe x16 slot supports NVIDIA GPU Acceleration Card
- Two 260-pin 2666/2133MHz Dual-Channel DDR4 SODIMM unbuffered Memory supported up to 128GB



Intel® Comet Lake | Smart Fan | USB 3.2 | HDMI | Type C | Dual GbE | PCIe slot

Dual PCIe Slots

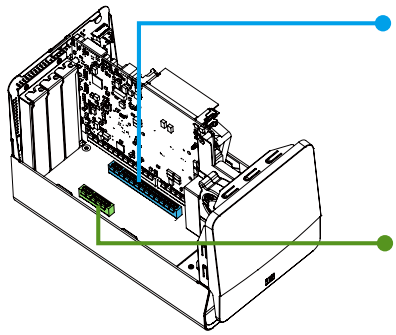

PCIe x16

Accelerator cards are crucial to data scientists. High compatibility for the GPU cards such as NVIDIA P4/T4/Quadro series allows the end user to choose accelerator cards based on their different needs.

PCIe x4

The redundant PCIe x4 slot is reserved for all-in-one video capture cards or other expansions.

Unique Thermal Solution

The accessible hard drive enables IT technicians to do the maintenance work more easily. The drive bay is located in the bottom of the HTB-210 and accepts 2.5" SSD or HDD. The IT technician can easily check or replace the storage device by removing four cover screws.

Catering to NVIDIA® Tesla T4 passive heat sink design, IEI adopts blower-ventilation solution that not only creates a strong air flow but also minimizes the noise made by fan system.



Easy Maintenance

The accessible hard drive enables IT technicians to do the maintenance work more easily. The drive bay is located in the bottom of the HTB-210 and accepts 2.5" SSD or HDD. The IT technician can easily check or replace the storage device by removing four cover screws.

Specifications

Model		HTB-210-Q470
Chassis	Color	White
	Dimension (LxWxH)	140 x 306.7 x 171 mm
	Thermal	Smart Fan
	Chassis Construction	Metal Housing (SECC)
Motherboard	CPU	i5-10500TE, 35W TDP (6 cores) i7-10700TE, 35W TDP (8 cores)
	Chipset	Intel® Q470
	System Memory	Two 260-pin 2666/2133MHz Dual-Channel DDR4 SODIMM ECC & non-ECC unbuffered Memory supported up to 128GB
Storage	Hard Drive	1 x 2.5” SATA HDD/SSD bay
I/O interfaces	USB	1 x USB Type C (USB/DP) 2 x USB 3.2 GEN1 2 x USB 2.0 (front side)
	Ethernet	2x Intel® I225-V PCIe controller (2.5GbE)
	COM port	1 x RS-232/422/485
	Display	1 x HDMI (up to 4096 x 2304@30Hz)
	Others	1 x Power button 1 x Reset switch 1 x AT/ATX switch
Expansions	PCIe	1 x PCIe 3.0 x4 slot 1 x PCIe 3.0 x16 slot
	M.2	1 x M.2 A key (2230) 2 x M.2 M key (2280/2242)
	Acceleration Card (Optional)	NVIDIA Tesla T4 (75W) Quadro P2200 (75W)
Power	Power Input	19V DC
	Power Adapter	100V~240V AC input, 19V DC output, 230W
Reliability	Operating Temperature	0°C~40°C
	Operating Humidity	10%~95% (Non-condensing)
	Storage Temperature	-20°C~60°C
	Operating Shock	Half-sine wave shock 5G, 11ms, 100 shocks per axis
	Operation Vibration	MIL-STD-810G 514.6C-1 (with SSD)
	Weight (Net)	2.8 Kg
Certification	Safety / EMC	UL/ cUL FCC Part15B EN 62368-1 Ed.2 + RMF EN 55032 + EN 55035
OS	Supported OS	Windows®10, Linux®

Ordering Information

Part No.	Description
HTB-210-Q470/2A-R10	Embedded system w/o CPU, w/o RAM, 1 x PCIe by 16 & 1 x PCIe by 4 expansion, 19V DC 230W power adapter, white color, for ATO only, R10
19FHTB210-000001-RS	Z695;Fan Module;HTB-210-Q470 Nvdia Tesla T4 Fan Module;STANDARD;00;HTB-210;;;CCL;RoHS

Packing List

Item	Part No.	Q’ty	Remark
Power Adapter	63040-010230-000-RS	1	230W power adapter Input: 100V~240V AC; Output: 19 V DC
Power Cord	32701-000700-300-RS	1	American power cord, 183 cm, C13
HDD Screw	44043-030041-RS	4	Machine screw; I head; M3x4

I/O Interface

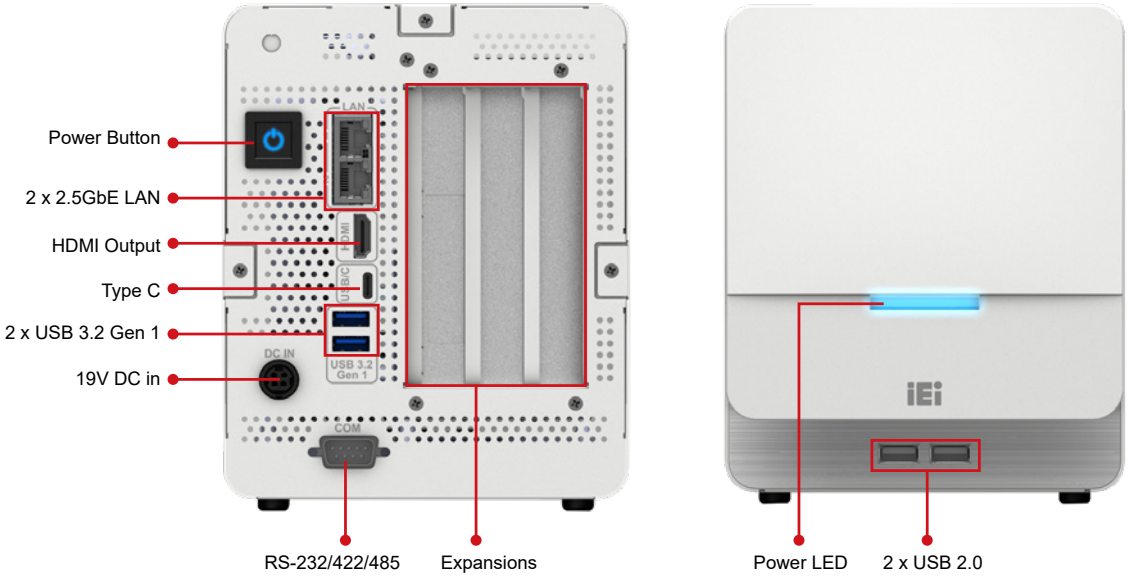

HTB-210-Q470 Dimensions

(Unit: mm)

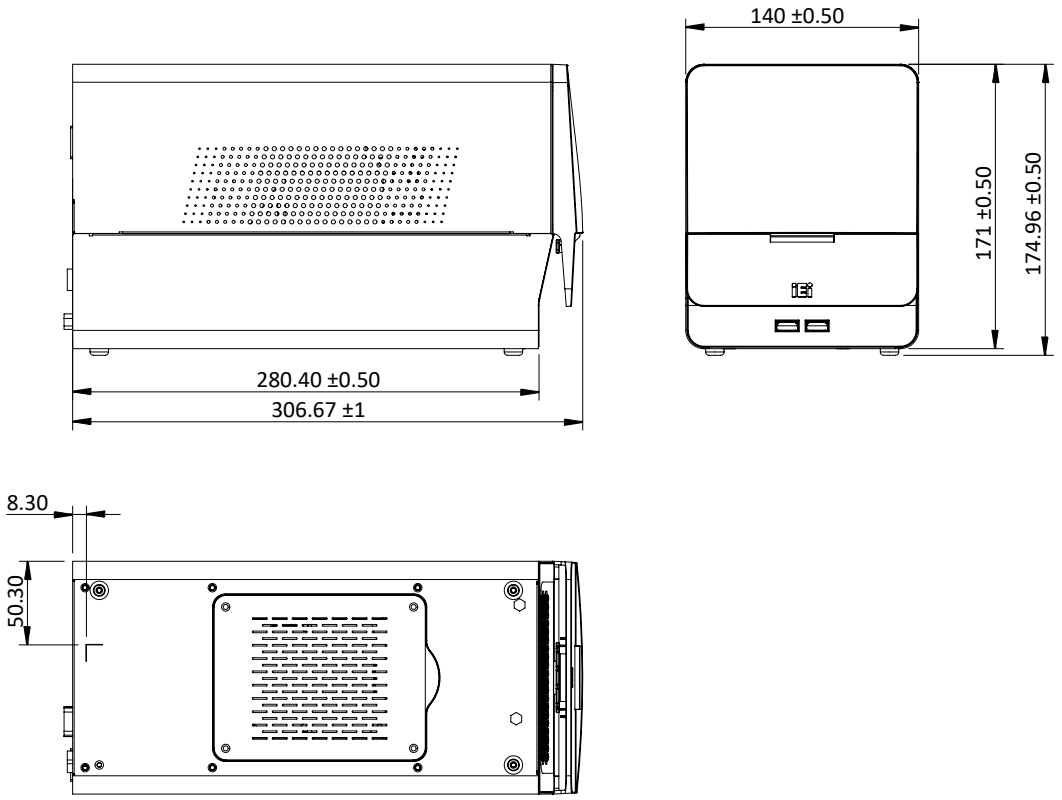

Solution Partner for Healthcare Industry



Medical Certifications

Celebrate Humanity with Technology

BriteMED is dedicated to developing and applying innovative electronic medical solutions that improve clinical workflow and enhance patient care. At BriteMED, all the solutions are designed, tested and refined with the clinical environment in mind. As an affiliate of the IEI Group, a reputed industrial application provider, we leverage the hardware and software strength to provide integrated solution, including medical device, medical display, computing platform, mobile workstation and powering system. The upmost medical solution together with the advanced technology is our commitment for medical professionals. From product design to integration service, we aim to develop reliable and technology-driven solutions that make people's lives better-whether they are doctors, nurses or patients. We believe perfecting those small details touches our customers and their individual requests.



Medical Monitor

Multi-modality display for endoscopy application and surgical environment

The BriteMED® medical display supports multiple digital and analog inputs, enabling the connection to the state-of–the art devices without extra efforts. The DICOM/GAMMA compliance and adjustable color temperature ensure accurate and artifact-free imaging quality, to help surgeons make decision during operation. The special-coating glass allows precise imaging view experience in the operation theater and facilitates clean purpose for infection control.



Medical Computer Cart

A wide range of medication and documentation carts for ward rounds

The BriteMED® Medical Computer Cart can be integrated with the battery medical panel PCs, providing an all-in-one solution for EHR workstation. For various hospital requirements, a range of colors and accessories can be chosen to maximize the flexibility for different applications.

BriteMED® 21" Medical Monitor

Multi-Interfaces for Endoscopy Examination

Powered by BriteMED



* Stand is optional

Benefits

Versatile Connection

Multiple inputs enable flexible connection by applications: VGA & DVI input for general connection, traditional analog input/output for replacing CRT monitor with old endoscopy system.

Accurate Image Viewing

The DICOM and GAMMA compliance ensures optimized color and grey scale reproduction, bring the accurate and quality imaging for further diagnosis.

Easy for Maintenance

The smart OSD allows quick monitor setting by PC. The optional GPIO port is reserved for developing customized functions and facilitating maintenance purpose.

Easy Installation

The VESA 75/100compliance supports easy installation in the space-limited examination room, on the cart, surgical boom arm, or other mounting kits

Selection Guide

Easy for Maintenance	Model with General VGA & DVI Input	Model with Traditional Analog Video Input
Without HDMI input/output	MMS-21C	MMS-21CA
With HDMI input/output for PIP/PBP display	MMS-21CH	MMS-21CAH

Dimensions (unit: mm)

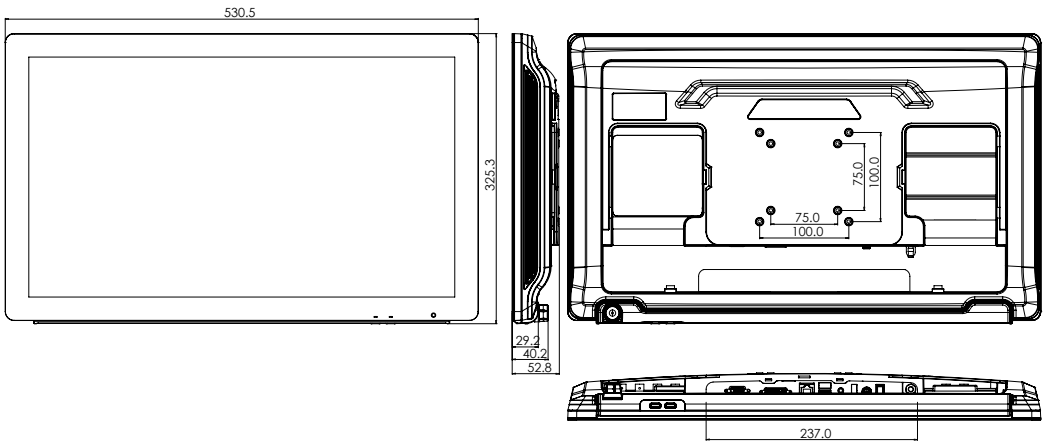

Specifications

Model		MMS-21C	MMS-21CA	MMS-21CH	MMS-21CAH
Description		General VGA, DVI inputs	Multiple analog inputs	VGA, DVI, and HDMI inputs	VGA, DVI, analog, and HDMI inputs
Picture Performance	LCD Size	21.5" (16:9)			
	Resolution	1920 (W) x 1080 (H) pixels			
	Brightness (max.)	250 nits (typical)			
	Contrast Ratio	5000:1 (typical)			
	Viewing Angle (H/V)	178° / 178° (typical)			
	Color Temperature	Factory calibrated 4500K, 5500K, 6500K, 7500K			
	Gamma Correction	Factory calibrated gamma 2.0 & DICOM			
	Function Keys	1 x OSD rotary knob 1 x Input source quick selection 1 x Monitor sleep			
Input	VGA (DB-15)	1			
	DVI-D	1			
	HDMI	N/A	N/A	1	1
	Component	N/A	BNC x 5 (Y/Pb/ Pr, R/Gs/B, R/G/ B/C-Sync, R/G/B/ H-Sync/V-Sync)	N/A	BNC x 5 (Y/Pb/Pr, R/Gs/B, R/G/B/C-Sync, R/G/B/H-Sync/ V-Sync)
	CVBS	N/A	BNC x 1 (NTSC, PAL)	N/A	BNC x 1 (NTSC, PAL)
	S-Video	N/A	1	N/A	1
	Audio	Phone jack x 1			
Output	HDMI	N/A	N/A	1, loop through	1, loop through
	Component	N/A	BNC x 5, loop through (Y/Pb/ Pr, R/Gs/B, R/G/ B/C-Sync, R/G/B/ H-Sync/ V-Sync)	N/A	BNC x 5, loop through (Y/Pb/ Pr, R/Gs/B, R/G/B/C-Sync, R/ G/B/H-Sync/V-Sync)
	CVBS	N/A	BNC x 1, loop through (NTSC, PAL)	N/A	BNC x 1, loop through (NTSC, PAL)
	S-Video	N/A	1, loop through	N/A	1, loop through
	Audio	0.8W x 2			
Optional Interfaces	3G-SDI	Input x 1 / Output x 1 (loop through)			
General	Power Requirement	10V~28V DC input			
	Power Adaptor	Medical grade power adaptor: input: 100-240V AC 50-60Hz; output: 12V DC/5.42A			
	Dimensions (L x W x H)	530 x 325 x 53 mm			
	Weight	6.6 kg			
	Mounting Standard	VESA 75 x 75 mm / 100 x 100 mm			
Environment	Operating Temperature	0°C~40°C			
	Operating Humidity	10%~90% (non-condensing)			
	Storage Temperature	-20°C ~60°C			
	Storage Humidity	10%~90% (non-condensing)			
Certifications	Certifications & Compliance	ANSI/AAMI ES60601-1, EN60601-1, CAN/CSA C22.2 No. 60601-1, and FCC Class B part 18			
Package Content	Monitor	1	1	1	1
	Power Adaptor	1	1	1	1
	Power Cord	1	1	1	1
	Grounding Cable	1	1	1	1
	VGA Cable	1	1	1	1
	DVI Cable	1	1	1	1
	HDMI Cable	N/A	N/A	1	1
	Touchscreen Cable	N/A	N/A	N/A	N/A
	USB Cable	1	1	1	1
	User Manual (USB flash drive)	1	1	1	1

Ordering Information

Part No.	Description
MMS-21C-R10	21.5” 1920x1080 color monitor, VGA/DVI-D input, 100~240 VAC to 12V DC power adaptor
MMS-21CA-R10	21.5” 1920 x 1080 color monitor, VGA/DVI-D/Component/CVBS/S-Video input, 100~240 VAC to 12V DC power adaptor
MMS-21CH-R10	21.5” 1920x1080 color monitor, VGA/DVI-D/HDMI input, 100-240V AC to 12V DC power adaptor
MMS-21CAH-R10	21.5” 1920x1080 color monitor, VGA/DVI-D/Component/CVBS/S-Video/HDMI input, 100-240V AC to 12V DC power adaptor

Factory Options

Part No.	Description
MMSO-3GSDI-R10	3GSDI input & output loop-through add-on module
STAND-A19-RS	VESA 75/100 stand, supports up to 7.5 kg, silver
STAND-DWH-R10	VESA 75/100 stand, supports up to 15 kg, white
AFLWK-19B	VESA 100 wall mount kit, supports up to 7.5 kg, silver

Signal Interface

MMS-21C

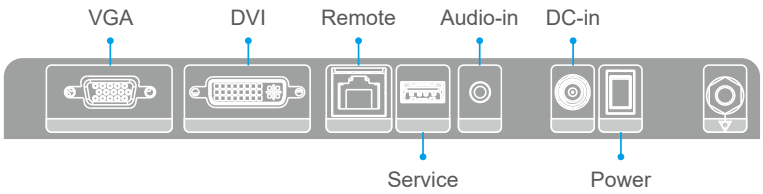

MMS-21CA

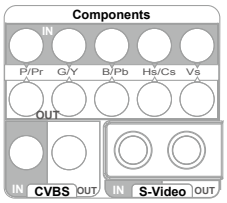

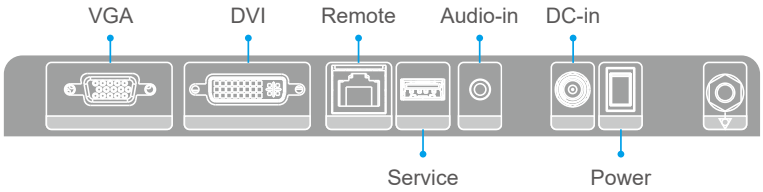

MMS-21CH

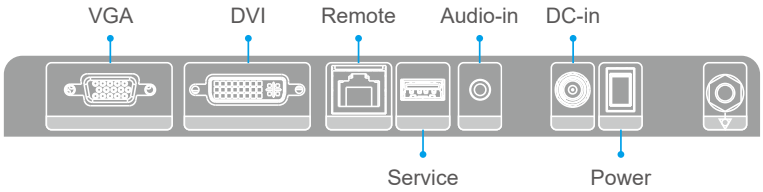

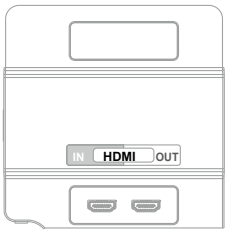

MMS-21CAH

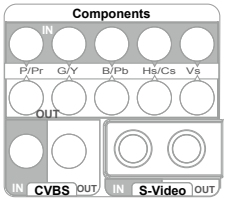

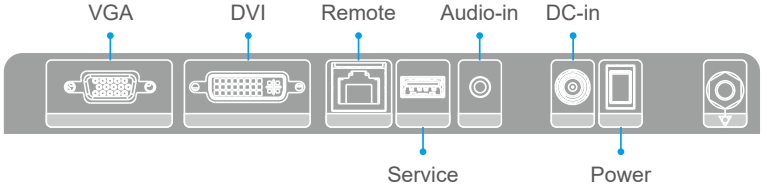

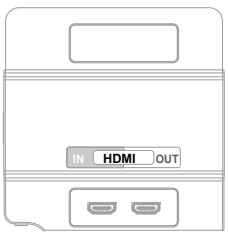

BriteMED® 21" Medical Monitor

Touch Function for Medical Modality Control Terminal

Powered by BriteMED



* Stand is optional

Benefits

Versatile Connection

Multiple inputs enable flexible connection by applications: VGA & DVI input for general connection, traditional analog input/output for replacing CRT monitor with old endoscopy system.

Easy for maintenance

The PCAP multi-touch screen enables easy operation even in latex gloves, facilitating procedure of image-viewing and information accessing.

Easy to Clean

The special-coating glass not only ensures precise image viewing experience under strong OR lighting but also brings easy-to-clean advantage required for infection control.

Accurate Image Viewing

The DICOM and GAMMA compliance ensures optimized color and grey scale reproduction, bring the accurate and quality imaging for further diagnosis.

Selection Guide

Easy for Maintenance	Model with General VGA & DVI Input	Model with Traditional Analog Video Input
Without HDMI input/output	MMS-21CT	MMS-21CAT
With HDMI input/output for PIP/PBP display	MMS-21CHT	MMS-21CAHT

Dimensions (unit: mm)

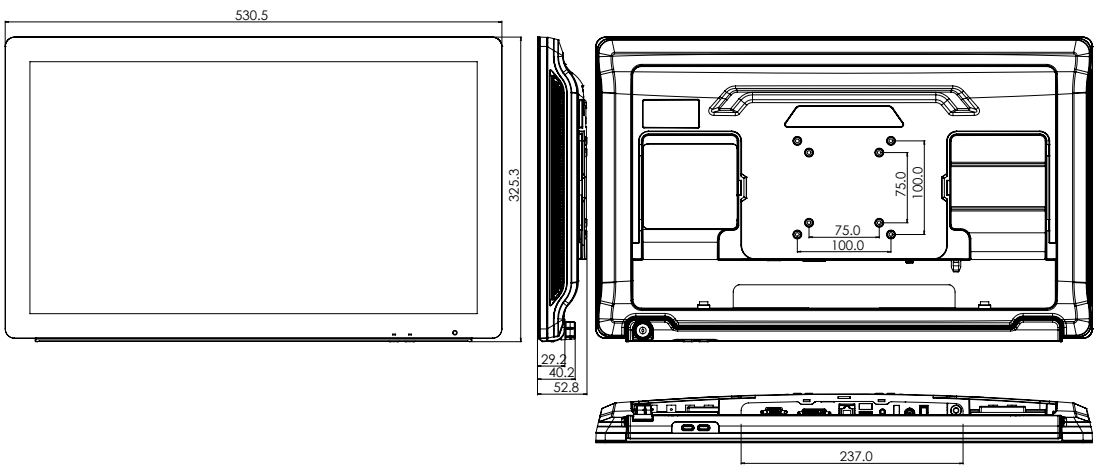

Specifications

Model		MMS-21CT	MMS-21CAT	MMS-21CHT	MMS-21CAHT
Description		Touch-screen model	Touch-screen model with analog inputs	Touch-screen model with HDMI input	Touch-screen model with analog and HDMI inputs
Picture Performance	LCD Size	21.5" (16:9)			
	Resolution	1920 (W) x 1080 (H) pixels			
	Brightness (max.)	250 nits (typical)			
	Contrast Ratio	5000:1 (typical)			
	Viewing Angle (H/V)	178° / 178° (typical)			
	Color Temperature	Factory calibrated 4500K, 5500K, 6500K, 7500K			
	Gamma Correction	Factory calibrated gamma 2.0 & DICOM			
Function	Touch Screen	Projected capacitive touchscreen (USB interface)			
	Function Keys	1 x OSD rotary knob 1 x Input source quick selection 1 x Monitor sleep			
Input	VGA (DB-15)	1			
	DVI-D	1			
	HDMI	N/A	N/A	1	1
	Component	N/A	BNC x 5 (Y/Pb/Pr, R/Gs/B, R/G/B/C-Sync, R/G/B/H-Sync/V-Sync)	N/A	BNC x 5 (Y/Pb/Pr, R/Gs/B, R/G/B/C-Sync, R/G/B/H-Sync/V-Sync)
	CVBS	N/A	BNC x 1 (NTSC, PAL)	N/A	BNC x 1 (NTSC, PAL)
	S-Video	N/A	1	N/A	1
	Audio	Phone jack x 1			
Output	HDMI	N/A	N/A	1, loop through	1, loop through
	Component	N/A	BNC x 5, loop through (Y/Pb/Pr, R/Gs/B, R/G/B/C-Sync, R/G/B/H-Sync/V-Sync)	N/A	BNC x 5, loop through (Y/Pb/Pr, R/Gs/B, R/G/B/C-Sync, R/G/B/H-Sync/V-Sync)
	CVBS	N/A	BNC x 1, loop through (NTSC, PAL)	N/A	BNC x 1, loop through (NTSC, PAL)
	S-Video	N/A	1, loop through	N/A	1, loop through
	Audio				
Optional Interfaces	3G-SDI	Input x 1 / Output x 1 (loop through)			
General	Power Requirement	10V~28V DC input			
	Power Adaptor	Medical grade power adaptor: input: 100-240V AC 50-60Hz; output: 12V DC/5.42A			
	Dimensions (L x W x H)	530 x 325 x 53 mm			
	Weight	6.6 kg			
	Mounting Standard	VESA 75 x 75 mm / 100 x 100 mm			
Environment	Operating Temperature	0°C~40°C			
	Operating Humidity	10%~90% (non-condensing)			
	Storage Temperature	-20°C ~60°C			
	Storage Humidity	10%~90% (non-condensing)			
Certifications	Certifications & Compliance	ANSI/AAMI ES60601-1, EN60601-1, CAN/CSA C22.2 No. 60601-1, and FCC Class B part 18			
Package Content	Monitor	1	1	1	1
	Power Adaptor	1	1	1	1
	Power Cord	1	1	1	1
	Grounding Cable	1	1	1	1
	VGA Cable	1	1	1	1
	DVI Cable	1	1	1	1
	HDMI Cable	N/A	N/A	1	1
	Touchscreen Cable	1	1	1	1
	USB Cable	1	1	1	1
	User Manual (USB flash drive)	1	1	1	1

Ordering Information

Part No.	Description
MMS-21CT-R10	21.5” 1920 x 1080 color monitor, VGA/DVI-D input, P-CAP Touchscreen, 100~240 VAC to 12V DC power adaptor
MMS-21CAT-R10	21.5” 1920 x 1080 color monitor, VGA/DVI-D/Component/CVBS/S-Video input, P-CAP Touchscreen, 100-240V AC to 12V DC power adaptor
MMS-21CHT-R10	21.5” 1920 x 1080 color monitor, VGA/DVI-D/HDMI input, P-CAP Touchscreen, 100-240V AC to 12V DC power adaptor
MMS-21CAHT-R10	21.5” 1920 x 1080 color monitor, VGA/DVI-D/Component/CVBS/S-Video/HDMI input, P-CAP Touchscreen, 100-240V AC to 12V DC power adaptor

Factory Options

Part No.	Description
MMSO-3GSDI-R10	3GSDI input & output loop-through add-on module
STAND-A19-RS	VESA 75/100 stand, supports up to 7.5 kg, silver
STAND-DWH-R10	VESA 75/100 stand, supports up to 15 kg, white
AFLWK-19B	VESA 100 wall mount kit, supports up to 7.5 kg, silver

Signal Interface

MMS-21CT

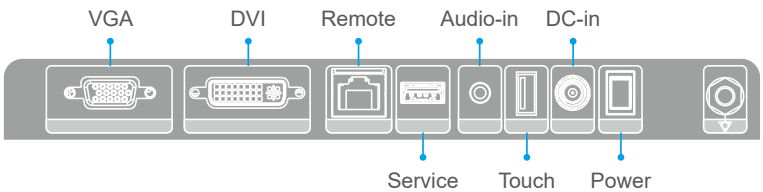

MMS-21CAT

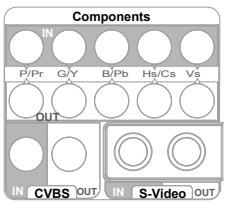

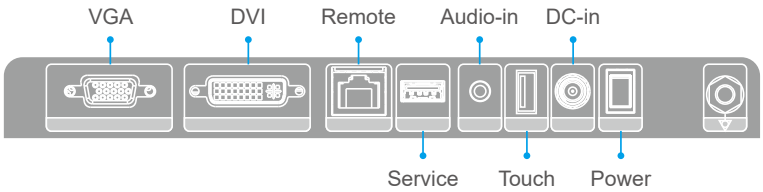

MMS-21CHT

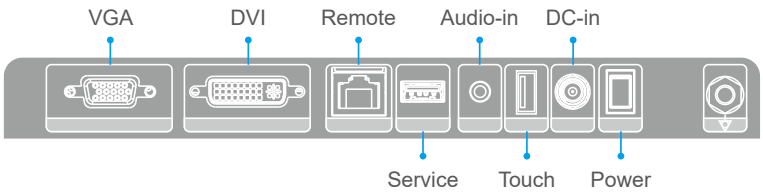

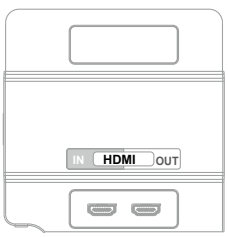

MMS-21CAHT

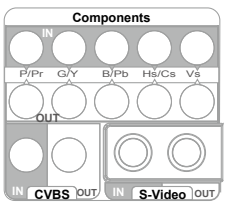

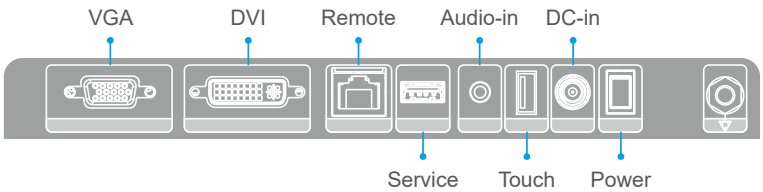

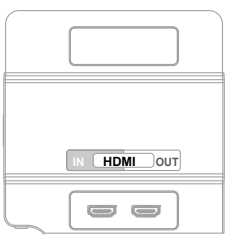

BriteMED® 27" Medical Monitor

High Brightness for Surgical Imaging

Powered by BriteMED



* Stand is optional

Benefits

Versatile Connection

Multiple inputs enable flexible connection by applications: VGA & DVI input for general connection, HDMI input/output featuring PIP/PBP function for multi-modality, and optional 3G-SDI module for advanced endoscopy system.

Accurate Image Viewing

The compliance with DICOM/ GAMMA ensures optimized color and gray scale reproduction for best image accuracy.

Exceptional Clarity

The 700-nits high brightness enhances clarity and details for both color and grayscale images.

Multimodality Imaging

The picture-in-picture (PIP) and picture-by-picture settings allow multimodality display capability for various image combinations.

Selection Guide

	With VGA & DVI input for general connection	With analog video input for traditional system
Without HDMI input/output	MMS-27C	MMS-27CA
With HDMI input/output for PIP/PBP display	MMS-27CH	MMS-27CAH

Dimensions (unit: mm)

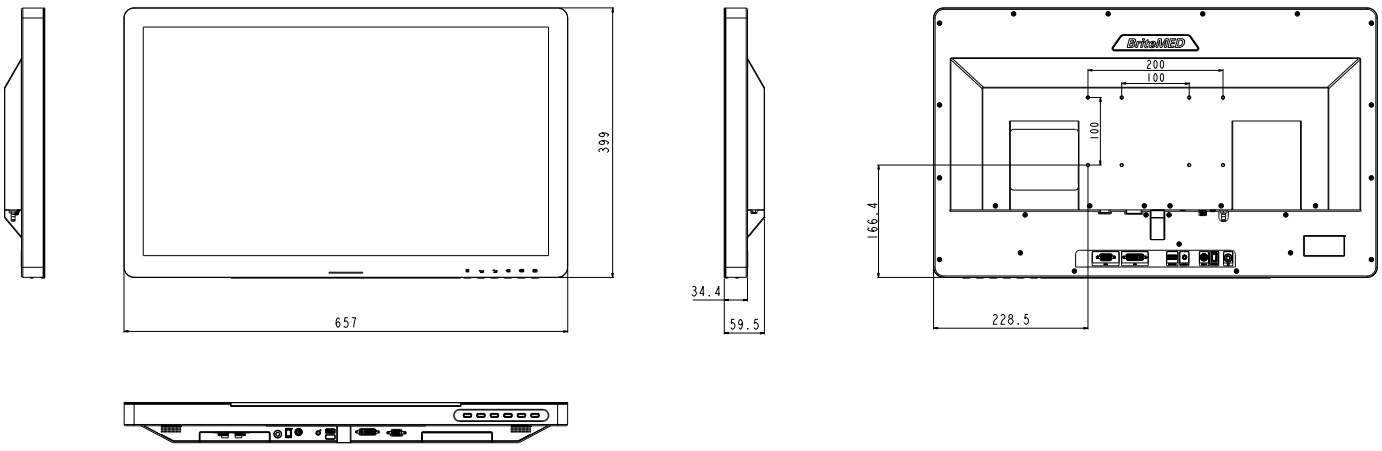

Specifications

Model		MMS-27C	MMS-27CA	MMS-27CH	MMS-27CAH
Description		General VGA, DVI inputs	Multiple analog inputs	VGA, DVI, and HDMI inputs	VGA, DVI, analog, and HDMI inputs
Picture Performance	LCD Size	27" (16:9)			
	Resolution	1920 (W) x 1080 (H) pixels			
	Brightness(max.)	700 nits (typical)			
	Contrast Ratio	1000:1 (typical)			
	View Angle (H/V)	178° / 178° (typical)			
	Color Temeperature	Factory calibrated 5500K, 6500K, 7500K, 9300K			
	Gamma Correction	Factory calibrated gamma 2.0 & DICOM			
Function	Function Keys	1 x MENU 1 x Input source 1 x Custom input		1 x Backlight up /+ 1 x Backlight down / - 1 x Image size adjustment	
Input	VGA (DB-15)	1			
	DVI-D	1			
	HDMI	N/A	N/A	1	1
	Component	N/A	BNC x 5 (Y/Pb/Pr, R/Gs/B, R/G/B/C-Sync, R/G/B/H-Sync/V-Sync)	N/A	BNC x 5 (Y/Pb/Pr, R/Gs/B, R/G/B/C-Sync, R/G/B/H-Sync/V-Sync)
	CVBS	N/A	BNC x 1 (NTSC, PAL)	N/A	BNC x 1 (NTSC, PAL)
	S-Video	N/A	1	N/A	1
	Audio	Phone jack x 1			
Output	HDMI	N/A	N/A	1, loop through	1, loop through
	Component	N/A	BNC x 5, loop through (Y/Pb/Pr, R/Gs/B, R/G/B/C-Sync, R/G/B/H-Sync/V-Sync)	N/A	BNC x 5, loop through (Y/Pb/Pr, R/Gs/B, R/G/B/C-Sync, R/G/B/H-Sync/V-Sync)
	CVBS	N/A	BNC x 1, loop through (NTSC, PAL)	N/A	BNC x 1, loop through (NTSC, PAL)
	S-Video	N/A	1, loop through	N/A	1, loop through
	Audio	0.8W x 2			
Optional Interfaces	3G-SDI	Input x 1 Output x 1 (loop through)			
General	Power Requirement	10V~28V DC input			
	Power Adaptor	Medical grade power adaptor: input: 100-240V AC 50-60Hz; output: 12V DC/7.5A			
	Dimensions (L x W x H)	657 x 399 x 59.5 mm			
	Weight	10 kg			
	Mounting Standard	VESA 100 x 100 mm / 200 x 100 mm			
Environment	Operating Temperature	0°C~40°C			
	Operating Humidity	10%~90% (non-condensing)			
	Storage Temperature	-20°C ~60°C			
	Storage Humidity	10%~90% (non-condensing)			
	Certifications & Compliance	ANSI/AAMI ES60601-1, EN60601-1, CAN/CSA C22.2 No. 60601-1, and FCC Class B part 18			
Package Content	Monitor	1	1	1	1
	Power Adaptor	1	1	1	1
	Power Cord	1	1	1	1
	Grounding Cable	1	1	1	1
	VGA Cable	1	1	1	1
	DVI Cable	1	1	1	1
	HDMI Cable	N/A	N/A	1	1
	USB Cable	1	1	1	1
	User Manual (USB flash drive)	1	1	1	1

Ordering Information

Part No.	Description
MMS-27C-R10	27” 1920x1080 color monitor, VGA/DVI-D input, 100-240V AC to 12V DC power adaptor
MMS-27CA-R10	27” 1920x1080 color monitor, VGA/DVI-D/Component/CVBS/S-Video input, 100-240V AC to 12V DC power adaptor
MMS-27CH-R10	27” 1920x1080 color monitor, VGA/DVI-D/HDMI input, 100-240V AC to 12V DC power adaptor
MMS-27CAH-R10	27” 1920x1080 color monitor, VGA/DVI-D/Component/CVBS/S-Video/HDMI input, 100-240V AC to 12V DC power adaptor

Factory Options

Part No.	Description
MMSO-3GSDI-R10	3GSDI input & output loop-through add-on module
STAND-DWH-R10	VESA 75/100 stand, supports up to 15 kg, white
WK-E35M-R10	VESA 100/200/200x100 wall mount kit, supports up to 35 kg, silver

Signal Interface

MMS-27C

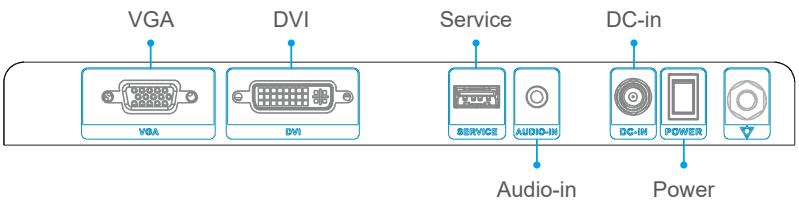

MMS-27CA

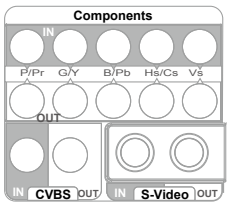

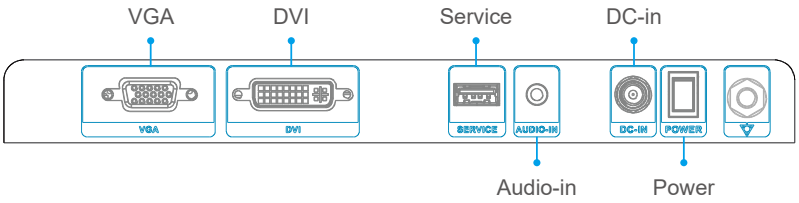

MMS-27CH

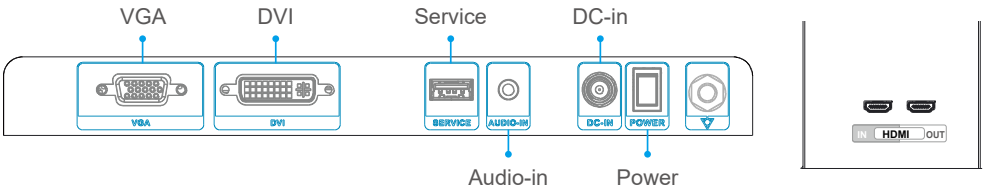

MMS-27CAH

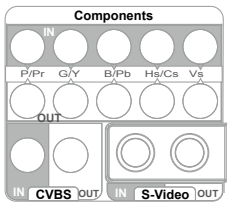

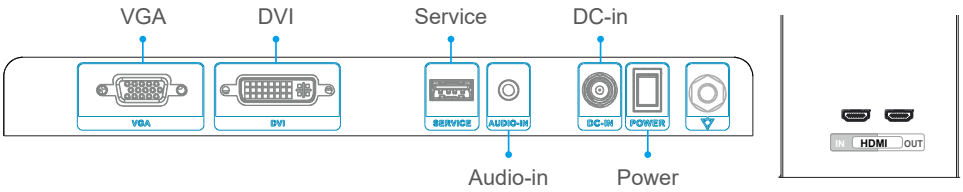

BriteMED® Medical Computer Cart

Powered by BriteMED

BriteMED® Medical Computer Carts are in wide selection for medication, ICU, and documentation purpose. Designed with aluminum-alloy structure and ABS working table feature durability and easy-to-clean advantage. When integrating with medical panel PC, the intelligent medical workstation creates clinical mobility that streamline the hospital workflow and improve ward-round efficiency.



Model No.		pCART-N1	pCART-N3	pCART-D1
Description		Ergonomic for medication use	Small and Compact for use in limited space	Elegant design for documentation purpose
Size (L x W x H)		68 x 54 x 103 cm	46 x 51 x 94 cm	54 x 52 x 79.5~109.5 cm
Working Table Dimensions (L x W)		59 x 45 cm		45 x 54 cm
Side Table Loading Weight (max.)		8 kg		N/A
Supported Arm Loading Weight (max.)		12 kg		8 kg
Standard Drawer Configuration	Total Height	27"	24"	N/A
	3" keyboard drawer	1	1	N/A
	3" drawer/ABS tray	1	2	N/A
	3" medication drawer	3	N/A	N/A
	6" drawer	2	1	N/A
	9" drawer	N/A	1	N/A
Mouse Holder		N/A		1
Document Basket		N/A		1
Barcode Reader Holder		N/A		1
Wheels		5"	4"	4"

*Accessories and panel PC are optional

Faster and New SATA Flash Storage

The anti-vibration IEI SLC flash modules featured low power consumption, high performance and perfect reliability are best for SATA SSD and SATA DOM solutions. The SSD not only has much higher performance than the HDD, but also can be operated anytime due to the lack of moving parts such as motor, bearing or rotating head. In addition, the SSD is able to fulfill any specialized application in any harsh environment.

■ Complete Industrial SLC Solution









Interface	IDE PATA	SATA 1.5Gb/s	SATA 3Gb/s
Data Transfer Rate	66/100/133 MB/sec.	SATA 6Gb/s	SATA 6Gb/s 3Gb/s
Reliability	Fair	Better	Better
Power Consumption	Higher	Lower	Lower
Heat Delivery	Fair	Better	Better
Chipset Support after 945G/GM	No	Yes	Yes

SLC vs. MLC Comparison Table

SLC
(Single-Level Cell) Structure chart

MLC
(Multi-Level Cell) Structure chart

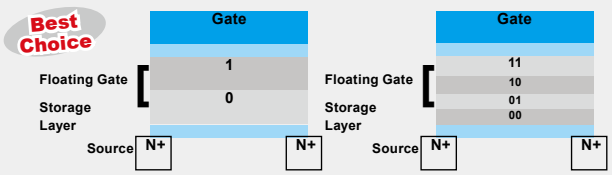

	SLC	MLC
Endurance (Erase cycle)	100,000	5,000-10,000
Operating Temp. Range	Support Wide Temp. -40°C~+85°C	0°C~+70°C
Power Consumption	Lower	Higher
Read/Write Performance	Better	Worse

■ IEI SATA Flash Module Selection

Item	IFM-3010IS(WS)/IFM-3010IL(WL) IFM-3010IPS(WPS)	IFD-2520IS (WS)
Picture		
Capacity	1GB~32GB	1GB~32GB
Interface	SATA 6Gb/s	SATA 6Gb/s
IDE Transfer Mode	PIO Mode 0-4 MwDMA Mode 0-2 UltraDMA Mode 0-2	PIO Mode 0-4 UltraDMA Mode 0-6
Data Transfer Rate	Read-300MB/sec. ; Write-130MB/sec.	Read-510MB/sec. ; Write-340MB/sec.
Operating Temp.	-0°C~+70°C ; -40°C~+85°C	iFD-25102S: 0°C~+70°C iFD-2520WT: -40°C~+85°C
Storage Temp.	-55°C~+95°C	-55°C~+95°C
Humidity	10%~95%, non-condensing	10%~95%, non-condensing
Vibration	20G	20G (7~2000Hz)
Shock	1500G/10 ms	1500G/0.5 ms
ECC Technology	High reiability based on the internail ECC function	High reiability based on the internail ECC function
MTBF	>3,000,000 hours	>3,000,000 hours
R/W Endurance	2,000,000 times	2,000,000 times
Wear-Leveing	Support	Support
DC Input Voltage	+5V single power supply operation	+5V single power supply operation
Power Mode	Auto stand-by and sleep mode	
Power Consumption	200 mA	
Enclosure Material	PC mechanical cover	Metal mechanical cover
Dimensions (WxLxH)	20.5 x 39.2 x 8 mm	69.8 x 100.1 x 9.3 mm
Certificate	RoHS / CE / FCC	

Ordering Information

• Industrial SATA Flash Card

Part No.	Interface	Capacity
IFM-3010IS-XXXX	Vertical SATA 6Gb/s 7 pin	1G~32G
IFM-3010WS-XXXX	Vertical SATA 6Gb/s 7 pin	1G~32G
IFM-3010IL-XXX	Vertical SATA 6Gb/s 7 pin	1G~32G
IFM-3010WL-XXXX	Vertical SATA 6Gb/s 7 pin	1G~32G
IFM-3010IPS-XXXX	Horizontal SATA 6Gb/s 7 pin	1G~32G
IFM-3010WPS-XXXX	Horizontal SATA 6Gb/s 7 pin	1G~32G

• Industrial SATA 2.5" Flash Disk

Part No.	Interface	Capacity
IFD-2520IS-XXXX	SATA 6Gb/s 7+15 pin	8GB~128GB
IFD-2520WS-XXXX	SATA 6Gb/s 7+15 pin	8GB~64GB

XXXXX=Capacity-128MB/256MB/512MB/1GB/2GB/4GB/8GB/16GB/32GB/64GB/128GB

I= Standard grade opertion temp.: 0°C~70°C

W=Industrial grade opertion temp.: -40°C~85°C



Intelligent DC UPS Module

12V/9~36V DC Input, 12V DC Output Uninterruptible Power Supply Module with Diagnostics

- VESA 75 or VESA 100 mounting
- 9-36V input through terminal or power jack, or 12V through power jack only
- Battery status and charge monitoring utility. Remote network management capabilities

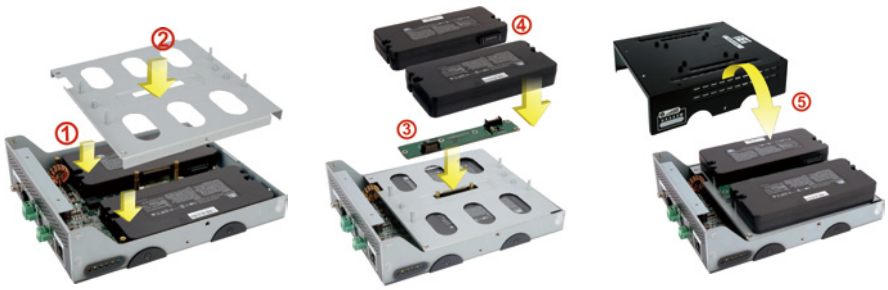

Features

- 60W (5A @ 12V) or 100W (8.3A @ 12V) output
- 28Wh or 56Wh, for more than 140 minutes operation time (depending on panel PC power requirements)
- Rugged metal enclosure for standard VESA 75/100 mounting
- Web-based, remote network management, no software installation required
- Local PC-based monitoring software for input detection and battery status monitoring
- Auto shut down when battery low
- Remote DC output on/off switch for external switch installation
- Provides stable power to the PC during line sags and spikes and absorbs power surges and transients, protecting expensive equipment





Model Name	AUPS-A10 / AUPS-A20	AUPS-B10 / AUPS-B20
Input Power	AUPS-A10 (12V)	AUPS-B10 (12V)
	AUPS-A20 (9~36V)	AUPS-B20 (9~36V)
Dimensions (mm)	150 x 95 x 34	170 x 150 x 34
Battery Capacity	28 Wh (Watt/Hour)	56 Wh (Watt/Hour)
Output Power	60W (5A@12V)	100W (8.3A@12V)
VESA Support (mm)	75 x 75	75 x 75 / 100 x 100

Intelligent UPS Module

High Energy Density / Lightweight / Compact DC to DC UPS & Power Module

Protect your panel PC from electrical damage and greatly reduce the risk of losing data. The UPS module serves as temporary power during a short break in power and allows a safe system shutdown for longer periods of power loss.



DC 9V~36V input by terminal block (Only AUPS-A20 / AUPS-B20)

- Only 12V input by DC jack (AUPS-A10 / AUPS-B10)
- Wide 9V~36V input by DC jack (AUPS-A20 / AUPS-B20)

D
Networking UPS Management Port by RJ-45 Ethernet

A
Dual Power Input Connector



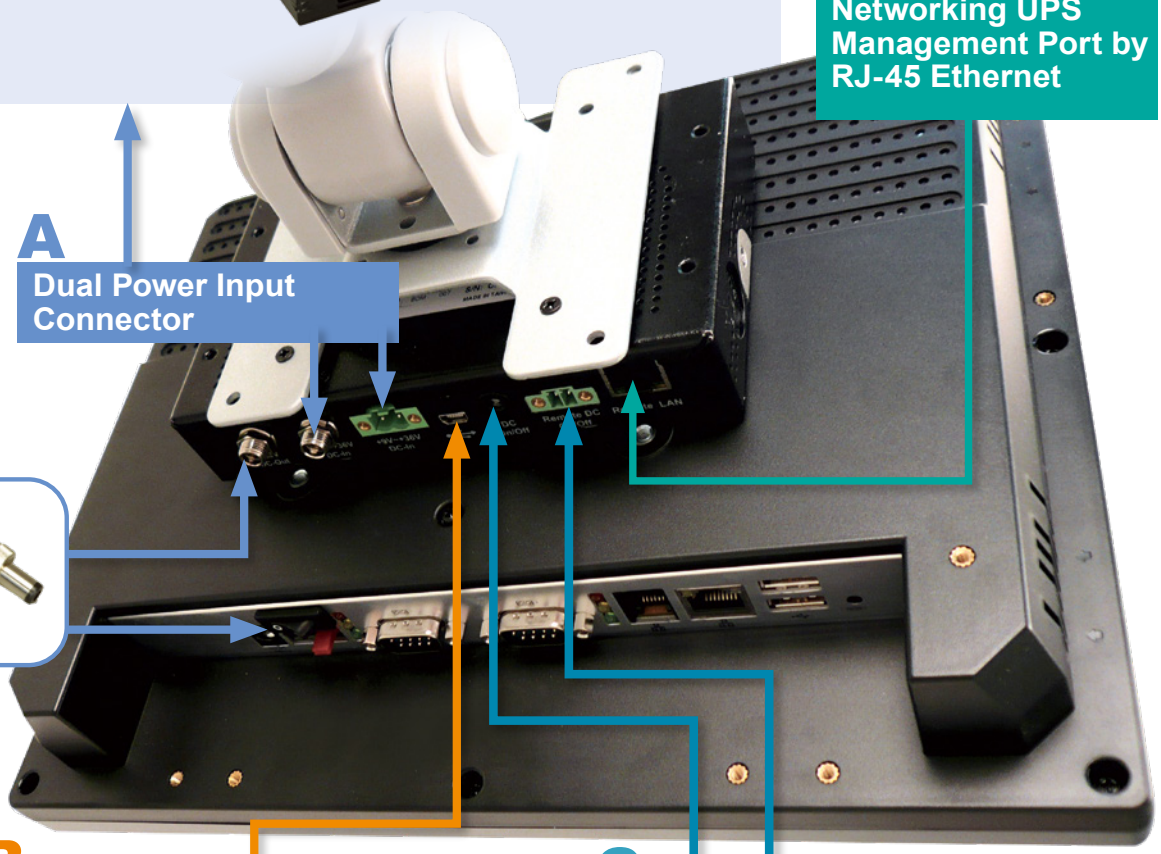

B
Battery Status USB Console Port

C
DC Power Button
DC Remote Power Button





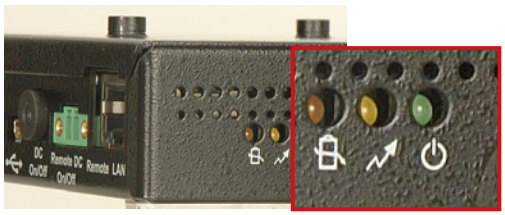

LED Signal Table			
	LED 1	LED 2	LED 3
Color	Green	Yellow	Orange
Function	Power Input	Charging Status	Battery Status
Dark	DC Power Out		
Light	DC Power In	Discharging	Battery Full
Blinking		Charging	Battery Low

AUPS Network Administration Tool

Intelligent Software Utility

The remote management software utility and application program allow users to easily get the status of the AUPS and to control the AUPS power functions from anywhere with internet connection.



Network Remote Management Software Battery Capacity Status

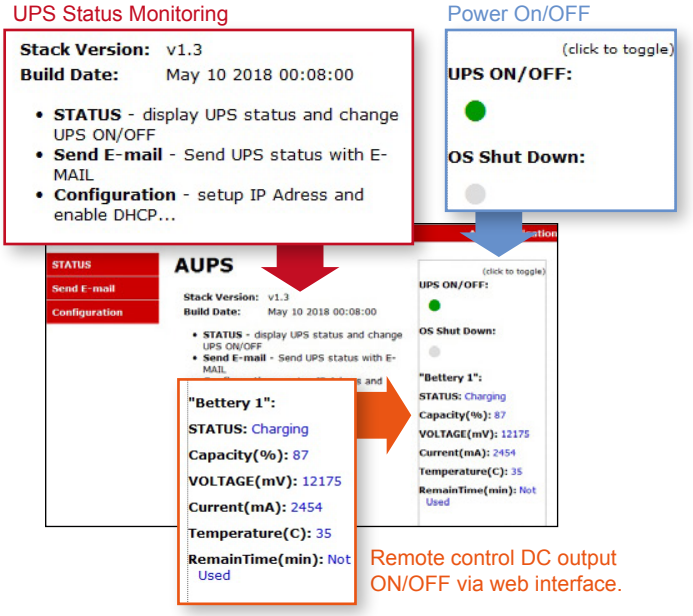

AUPS Local USB Utility Tool

Monitor the Most Critical Battery Functions on the Local Machine

The battery monitoring utility provides AUPS status monitoring and configuration ability. Uninterruptible Power Systems is a significant product that serves as emergency power when you suffer from electric event.



MONITORING SYSTEM STATUS

Shows system status real-time monitoring
- DC Power indicator
- Battery capacity
- Battery status
- Temperature



BATTERY STATUS

Shows battery status real-time monitoring
- Real-time information update
- Status bar



LAN CONFIGURATION

LAN shows system IP Address information



E-MAIL

The E-mail page is where to set the SMTP settings for sending alert notification via e-mail



SETTING

Setting system management

Buzzer	Enable or disable the buzzer that warns when the system is switching to use battery power.
Enable LAN	Enable or disable the LAN for remote monitoring function.
Power	Click the button to power off the AUPS power module immediately.
Auto DC on	Enable to automatically power on the AUPS once DC power is applied.
Shut down condition (capacity %)	Set the battery capacity parameter for the system to shut down automatically.
DC off delay time (0~65536 sec)	Set the delay time for the AUPS series to power off after the system shut down.
System will be down-converted (capacity %)	Set the battery capacity parameter for the system to automatically switch to the Balanced power plan set in its Windows OS.
System go to sleep mode (capacity %)	Set the battery capacity parameter for the system to go into sleep mode automatically.

AUPS Module Specifications

Model Name		AUPS-A10	AUPS-A20	AUPS-B10	AUPS-B20
VESA Type		VESA 75	VESA 75	VESA 75 and 100	VESA 75 and 100
Input Data	Input voltage Uinated/range	DC +12V	DC +9V~+36V	DC +12V	DC +9V~+36V
	Input current rated	1. Adapter is 12V-6A (Load is 60W) 2. Battery is 6V-12A (Load is 60W)		1. Adapter is 12V-9A (Load is 100W) 2. Battery is 12V-9A (Load is 100W)	
	Standby power consumption	0.3A (0.2A if Network Management disabled)			
	Operation with charging current	500mA			
	Operation with charging power consumption	6W		10W	
	Charging time with system ON/OFF	8hrs / 2hrs (Battery empty)			
Output Data	Output voltage for normal operation	DC +12V +/-5%			
	Output voltage for battery operation (approx).	6~8.4V DC6 V (exhaustive discharge protection)		12~16.8V DC12 V (exhaustive discharge protection)	
	Output current	0A~5A		0A~8.3A	
	Efficiency (nominal operation) / power loss at Vin=12V, Iout=80% of full loading	89%	93%	95%	94%
Protection	Short-circuit protection	Yes			
	Exhaustive discharge protection	1. Battery low is 10% of battery capacity 2. Shuntdown 5% of battery capacity (Default) 3. The end of battery discharge voltage is 6V			
	EMC / Safety certification	CE, FCC			
Monitoring	Ethernet interface	Web-based, specification 10/100Mbps with RJ-45 connection, Cat. 5 cable			
	USB interface	PC-capable, specification 2.0 with full speed, i.e. 2 Mbit/s. Standard 4-core shielded cable, USB Series "mini B" connector to DC-UPS			
Physical	Dimensions (LxWxH)	152mm x 96mm x 28mm		174mm x 147mm x 35mm	
	Weight	1.2 kg		1.8 kg	
LED Indicator	Green	DC power input			
	Yellow	Battery charging			
	Orange	Bettery discharging			
Environment	Operating Tem.	0°C~40°C			
	Storage Tem.	-20°C~50°C			

Note1: Connecting DC input constantly is recommended. Battery will be drained after 14 hours.
Note2: System power consumption + AUPS charging power consumption = Total watts of power source

Battery Module Specifications

Model Name	AUPS-A10	AUPS-A20	AUPS-B10	AUPS-B20
Battery Model Name	31603-000072-RS		31603-000073-RS	
Battery type	Li-Ion 2S2P 7.26V		Li-Ion 4S2P 14.52V	
Battery capacity	7.26V 5200 mAH		14.52V, 5200 mAH	
Maximum charge voltage	8.4V		16.8V	
The end of discharging voltage	5.5V		11V	
Recommended charging current (max.)	2.55A		2.55A	
System continuous discharging current (max.)	7.5A		7.5A	
The end of charge condition	255mA / 1Min		255mA / 1Min	
Discharge protection	Over current protection			
Charge protection	Over current protection			
Ambient temperature	0°C~45°C			
Storage temperatur	-20°C~65°C			
Self-discharge rate	340uA~440uA			
Dimensions (LxWxH)	139mm x 47mm x 26mm		165mm x 76mm x 26mm	
Weight	244g		466g	
Cycle life	300 charge / discharge cycles			
Backup 60W / 10Min 100W / 10Min	50W / 10Min		100W / 10Min	
Safety class	CE, FCC, UN38.3, UL			

Note: Replacing battery module every 2 years is recommended.


31603-000072-RS


31603-000073-RS

Selection Table for UPS Modules and Main Buffering Time

AFOLUX PPC	AUPS-A10	AUPS-A20	AUPS-B10	AUPS-B20
Under 50W solution				
AFL3-W07A-BT (20W)	110min	110min	220min	220min
AFL3-08A-BT (30W)	75min	75min	150min	150min
AFL3-W10A-BT (33W)	70min	70min	140min	140min
AFL3-12A-BT (42W)	55min	55min	110min	110min
AFL3-W15A-BT (50W)	45min	45min	90min	90min
AFL3-W19A-AL (40W)	55min	55min	110min	110min
50W ~ 100W solution				
AFL3-12C-ULT3 (58W)	-	-	75min	75min
AFL3-W15B-H81 (72W)	-	-	60min	60min
AFL3-W15C-ULT3 (68W)	-	-	65min	65min
AFL3-W19C-ULT3 (63W)	-	-	70min	70min
AFL3-W22C-ULT3 (65W)	-	-	70min	70min

Ordering Information

Part No.	Description
AUPS-A10-R20	VESA 75, DC 12V input 60W UPS module with 7.26V; 5200mAH, 2S2P Li-Ion battery, R20
AUPS-A20-R20	VESA 75, DC 9V ~ 36V input 60W UPS module with 7.26V; 5200mAH, 2S2P Li-Ion battery, R20
BATKIT-2S2P5200-R10	Battery installation kit with 2S2P 7.26V 5200mAH Smart Battery pack and accessories
31603-000072-RS	Battery Pack; Li Ion; WELL DONE/WTE; EXIC011K1002; SAMSUNG; ICR18650-26J; 5200mAH; 7.26V; 2S2P; 244±10g;BAT-LI-2S2P5200; CCL; RoHS
AUPS-B10-R20	VESA 100, DC 12V input 100W UPS module with 14.52V; 5200mAH, 4S2P Li-Ion battery, R20
AUPS-B20-R20	VESA 100, DC 9V ~ 36V input 100W UPS module with 14.52V; 5200mAH, 4S2P Li-Ion battery, R20
BATKIT-4S2P5200-R10	Battery installation kit with 4S2P 14.52V 5200mAH Smart Battery pack and accessories
31603-000073-RS	Battery Pack; Li Ion; WELL DONE/WTE; EXIC021K1002; SAMSUNG; ICR18650-26J; 5200mAH; 14.52V; 4S2P; 466±10g; BAT-LI-4S2P5200; CCL; RoHS

Note: The backup time could be varied on different models or operating temperature.

Packing List



Item	DC power cable, 150mm, DC plug 5.5 x 2.1 to DC plug 5.0 x 2.5 without lock	USB cable, 200mm, USB type A male to mini USB	Remote switch cable, 1200mm	Screw kit
Part Number	32000-120400-RS	32000-115500-RS	32000-124600-RS	44013-030041-RS
Q'ty	1	1	1	1

AUPS Mechanical Drawing (Unit: mm)

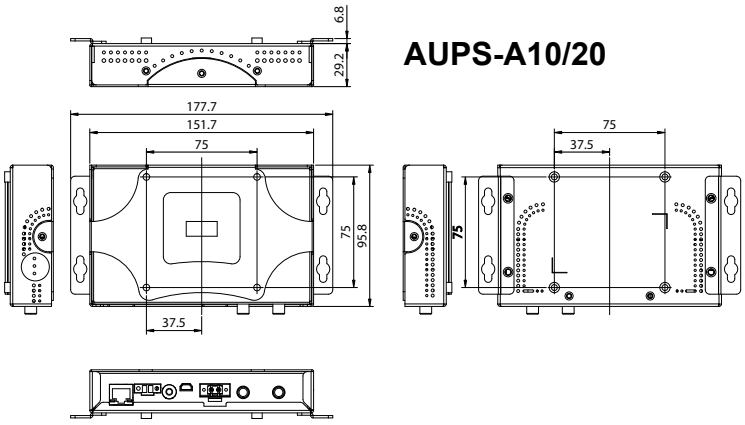

DC Power Cable (DC plug to DC plug) with lock
32000-115300-RS



Remote Switch Cable
32000-124600-RS

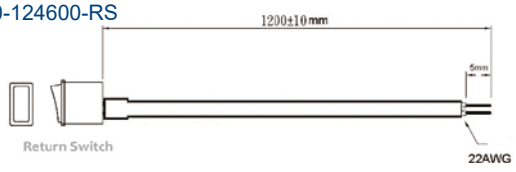

USB Connection Cable
32000-115500-RS



DC Power Cable (DC plug to DC plug) without lock
32000-120400-RS



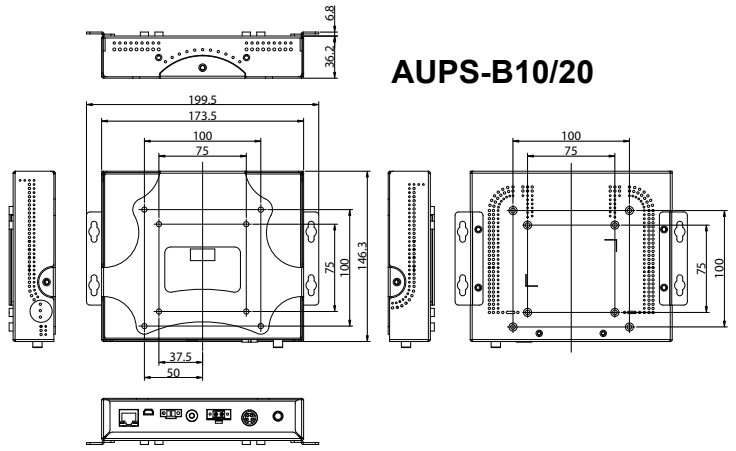

DC Power Cable (DC plug to mini DIN)
32002-002201-100-RS

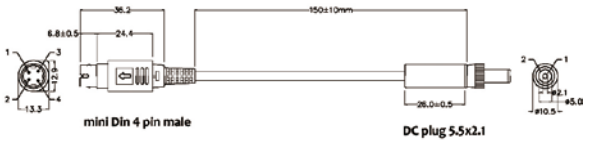

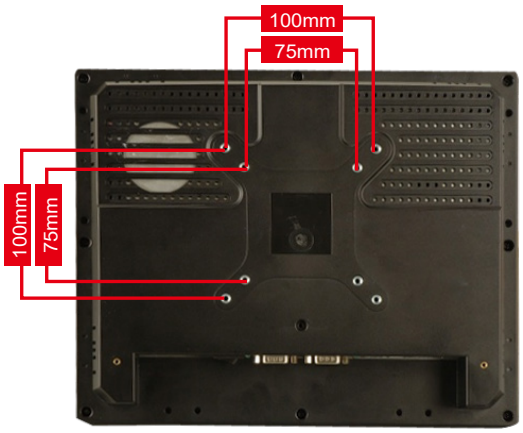

IEI Quick Mounting Technology

Compliant with VESA Mounting Standards

IEI panel solutions have four mounting holes compliant with the VESA (Video Electronics Standards Association) mounting standard (75mm x 75mm/100mm x 100mm) on the rear panel for stand mounting and other mounting methods.

1. Stand Mounting

- **VESA 75/100 Universal Stand**



STAND-A21-R10



Portrait/Landscape



Height Adjustment (13 cm)



Right/Left Pan (360°)



Forward/Backward Tilt (+25°/-5°)

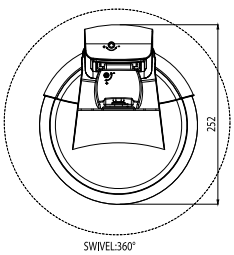

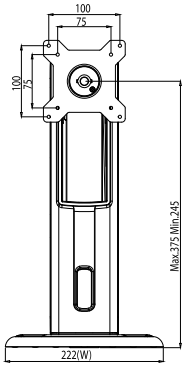

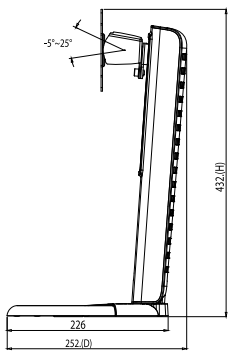

Ordering Information

Part No.	Description
STAND-A21-R10	15”~21” VESA 75x75 mm/100x100 mm PPC/Monitor Stand, support from 6 KG to ~12 KG, Black, RoHS



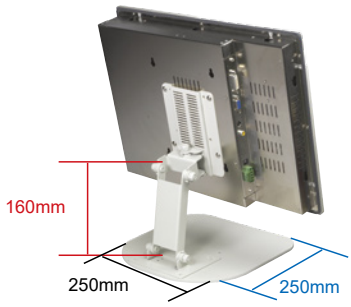

STAND-100

Ordering Information

Part No.	Description
STAND-100-RS	• Material: Heavy-duty steel • Adjustable display angle • 3kg to 8kg loading capacity • Color: White (Pantone 413C)



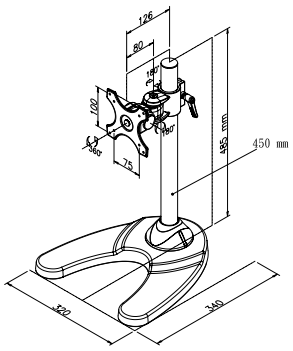

STAND-210

Ordering Information

Part No.	Description
STAND-210-R11	• Support VESA 75/100 standard • Weight capacity from 7kg~10kg

• VESA 75/100 Easy Stand





STAND-C12-R10

STAND-C19-R10





Tilt Forward/Backward

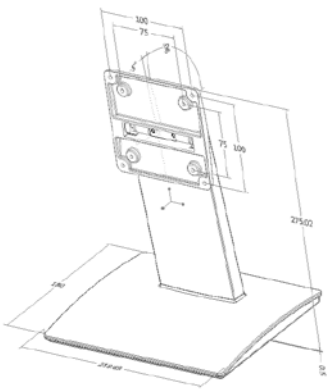

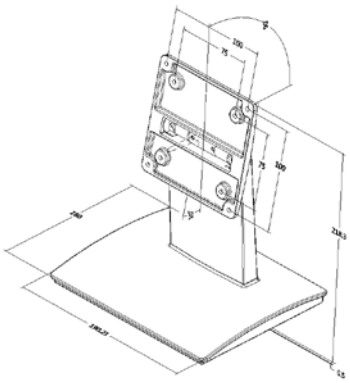

STAND-C19-R10

STAND-C12-R10

Ordering Information

Part No.	Description
STAND-C12-R10	5.7" ~ 12.1" VESA 100x100mm, 75x75mm PPC/Monitor Stand, support up to 7.5kg, Black color, RoHS
STAND-A19-RS	12.1"~19" VESA 100x100mm PPC/monitor stand, support up to 7.5 kg, Silver color, RoHS

2. V-STAND

VESA Multi-Mounting Stand

IEI patented multi-mounting V-Stand allows wall, ceiling, desk, rear and side mounting to meet diverse applications. Its 0° to 90° adjustable hinge design provides optimal viewing in various environments, such as kitchen, room or shelf.

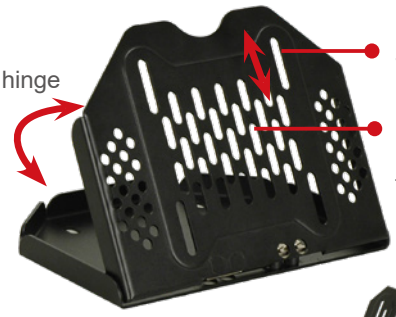



VSTAND-A07
(For 5.6"~7" AFL series)

VSTAND-A10
(For 8.4"~10.4" AFL series)

VSTAND-A12
(For 12.1" AFL series)

Features:

- 0º to 90º adjustable hinge design allows comfortable viewing
- Standard VESA 75/100 compliance
- Heat dissipation holes
- Compact size, easy to use for mounting anywhere

VESA	Model
75 x 75mm	VSTAND-A07-R11
75 x 75mm / 100 x 100mm	VSTAND-A10-R11
	VSTAND-A12-R11

A. One fits all solution

The V-Stand is a compact and tilt adjustable mounting stand providing mobility and ergonomic comfort to fit common wall mounting and ceiling mounting situations.

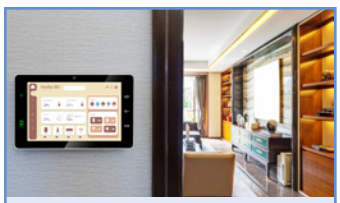
Wall Mounting


Ceiling Mounting

B. 0º to 90º excellent adjustability

You can change the angle of the stand from 0° to 90° to reach almost any point with ergonomic features for comfortable viewing.


POS System

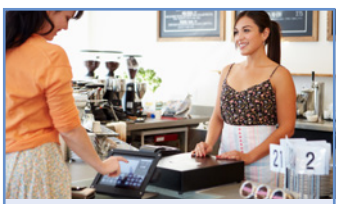
Self-ordering System

C. Space saving and easy installation

Compact size
provides mobility




1: Tighten the screws in the rear of the AFOLUX PPC VESA mounting holes


2: Select the position to mount stand kit


3: Plug in the system to operate

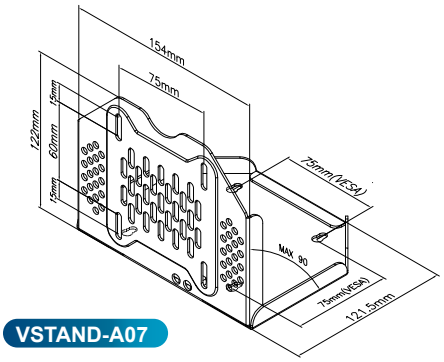

VSTAND-A07

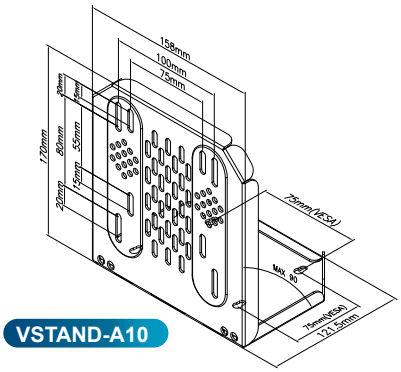

VSTAND-A10

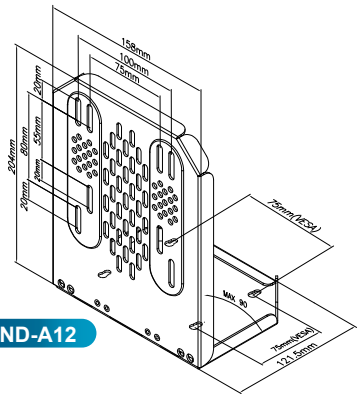

VSTAND-A12

Ordering Information

Part No.	Description
VSTAND-A07-R11	LCD monitor / PPC stand V type, for AFL series, VESA 75, 0°~90° degree adjustable hinge, support up to 2.5 kg, RoHS
VSTAND-A10-R11	LCD monitor / PPC stand V type, for AFL series, VESA 75/100, 0°~90° degree adjustable hinge, support up to 3 kg, RoHS
VSTAND-A12-R11	LCD monitor / PPC stand V type, for AFL series, VESA 75/100, 0°~90° degree adjustable hinge, support up to 3.5 kg, RoHS

3. ARM

VESA 75/100 Desk ARM

VESA	Model
75x75mm/100x100mm	ARM-11-RS
	ARM-31-RS

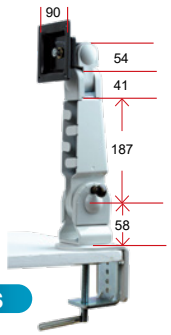

ARM-11-RS

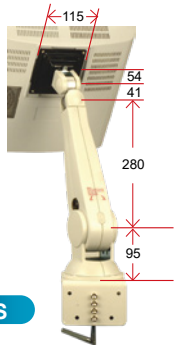

ARM-31-RS

Ordering Information

Part No.	Description
ARM-11-RS	LCD Monitor / PPC ARM, VESA 75/100, 3kg~6kg, RoHS
ARM-31-RS	LCD Monitor / PPC ARM, VESA 75/100, 7kg~14kg, RoHS

4. Wall Mounting

VESA 75/100 Wall Mounting

VESA	Model
75x75mm/100x100mm	AFLWK-12
	AFLWK-19B

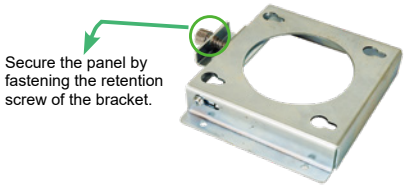

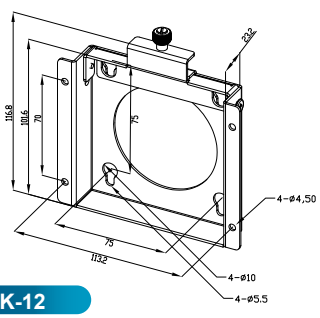

AFLWK-12

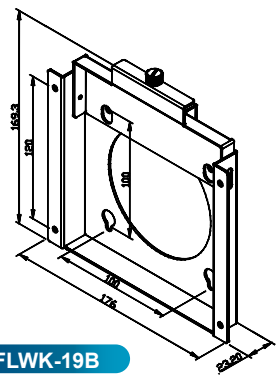

AFLWK-19B

Ordering Information

Part No.	Description
AFLWK-12	5.6”~12" VESA 75x75mm PPC/Monitor Wall Mount Kit with Retention Screw, Silver color, RoHS
AFLWK-19B	15”~19" VESA 100x100mm PPC/Monitor Wall Mount Kit with Retention Screw, Silver color, RoHS

5. Panel Mounting

***Please refer to product datasheet for mounting way suggestion**

Type A





Type B



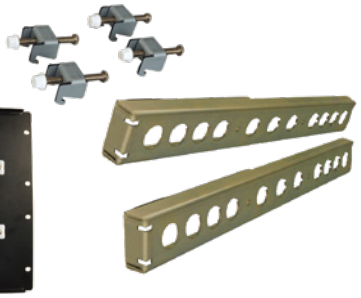

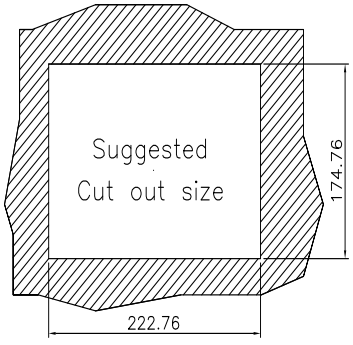

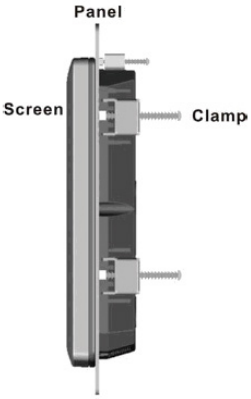

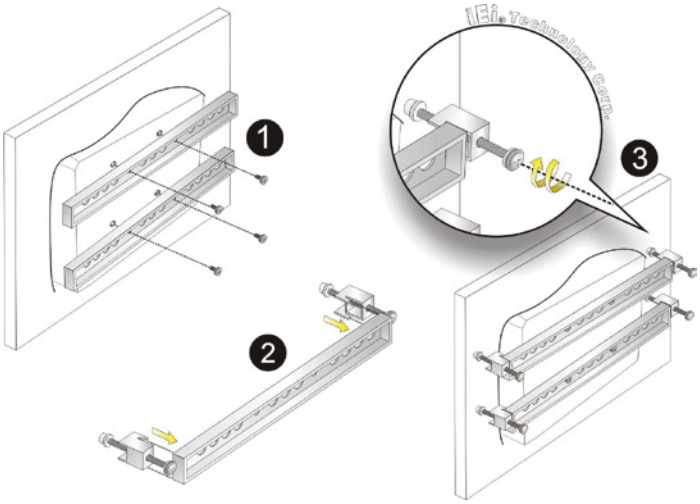

6. Rack Mounting

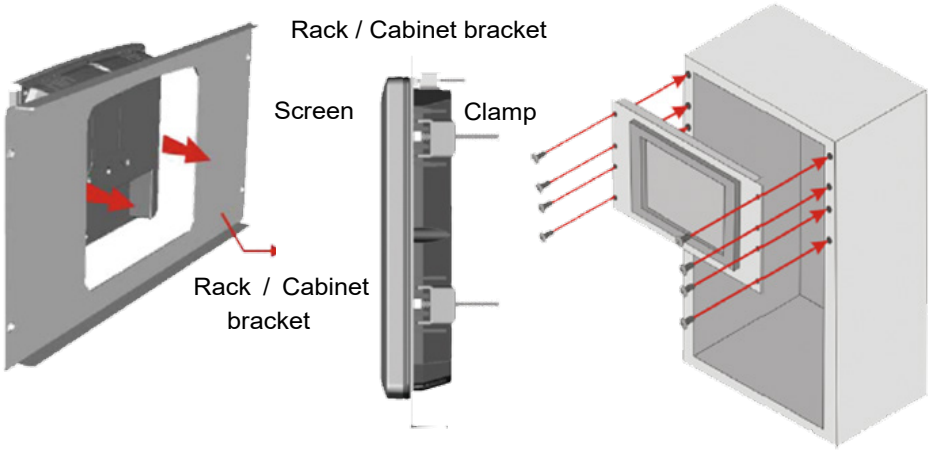

Ordering Information

Part No.	Description
AFLRK-xx	For AFOLUX PPC/Monitor Series



Accelerate to The Future

PEMUX Introduction

The PEMUX allows users to deliver with maximum 56 lane of PCI Express 3.0 to PEMUX backplane while taking advantage of the speed and increased bandwidth of PCI Express.

What is PEMUX ?

- **Bringing PCI Express to your SBC with maximum lane signal quantity, increased speed and bandwidth**
  PEMUX is designed for AI computing usage. AI computing needs to expand accelerator card, and PEMUX can provide up to 56 lane PCIe signals to the backplane.
  All PCIe signal connect to CPU directly, this is perfect for applications that require minimal latency.
- **New pin definition for PCIe signal pass through to backplane**
  With the maximization of PCIe lane signal quantity, we need the brand new pin define for supporting all signals pass through to the backplane, we called PEMUX design which defined by IEI.

The Advantage of PEMUX

- Maximum 56 lane PCIe signals signals to fulfill AI deep learning or inference demand
- IPMI remote management

The Benefits of PEMUX

- With the backplane can expand up to 4 dual width graphics cards
- Use Intel® Xeon W High performance processor

Full-size PEMUX PCIe Slot Configuration

Full-size SBC Type			Server & Graphic Grade	
Combination			A	B
PCIe Slots Available (non switch)	CPU	x16		2
		x8	4	
		x4	4	4
	PCH	x4	2	2
Backplane Solution			PEMUX-DB series	

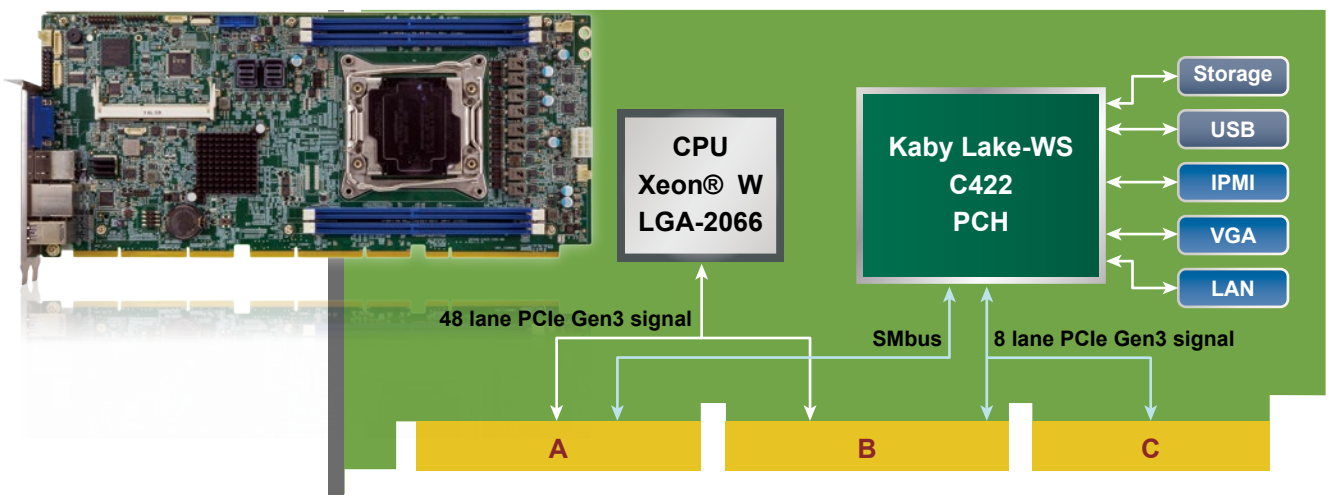

PEMUX-XEW1

Full-size PEMUX CPU Card supports LGA2066 Intel® Xeon® W CPU per, Intel® C422, DDR4 ECC RDIMM, IPMI VGA output, Aquantia 10GbE, USB 3.2 Gen 1 (5Gb/s), SATA 6Gb/s, M.2 and RoHS

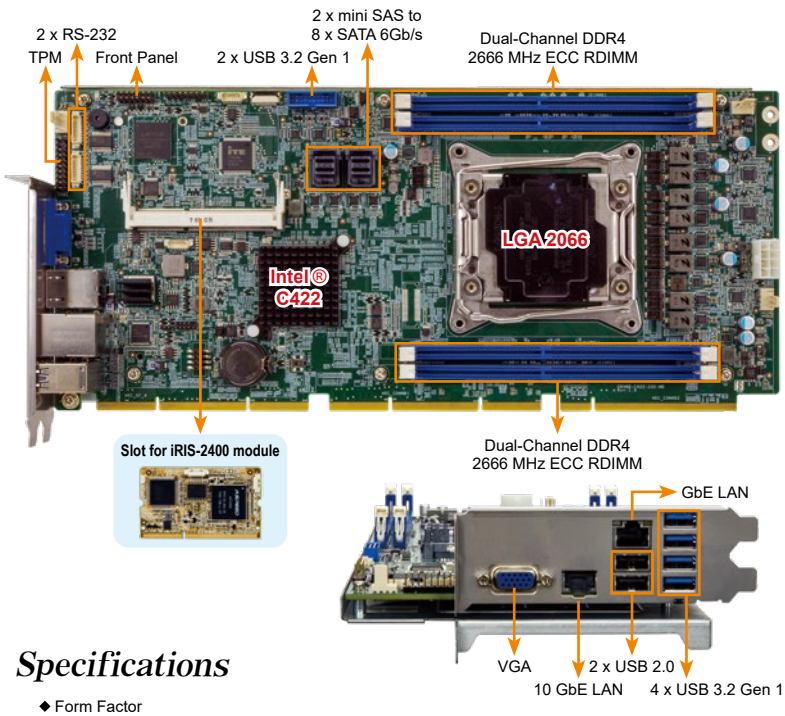

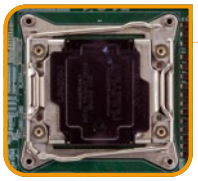

LGA 2066

Support Intel® Xeon W series CPU

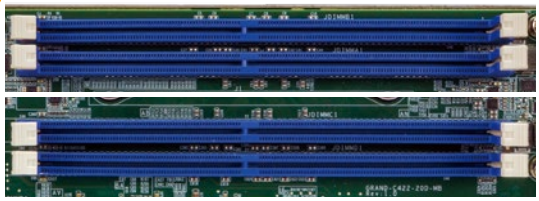

Four 288-pin DDR4 ECC RDIMM/LRDIMM Suppotred

Four 288-pin 2666MHz dual-channel DDR4 SDRAM ECC RDIMM / LRDIMM (system max.256GB) supports in IEI full-size server grade CPU card.



PEMUX can provide up to 56 lane PCIe signals to the backplane. With the maximization of PCIe lane signal quantity, we need the brand new pin define for supporting all signals pass through to the backplane, we called PEMUX design which defined by IEI.



TPM 2.0 Support



Specifications

- Form Factor
  PEMUX Full-size CPU card (12 layers)
- CPU
  LGA2066 socket supports Intel® Xeon W processor
- Chipset
  Intel® C422
- Memory
  Four 288-pin Dual-Channel DDR4 ECC RDIMM/LRDIMM supported up to 256GB
- BIOS
  UEFI BIOS
- Super I/O
  Fintek F81216D
- EC
  iWDD
- Display Output
  1 x VGA port (from IPMI)
- Ethernet
  LAN1: 1 GbE NIC: Intel® i210-AT with NCSI support
  LAN2: 10 GbE NIC: Aquantia AQC107
- External I/O Interface
  2 x USB 2.0
  4 x USB 3.2 Gen 1 (5Gb/s)
- Internal I/O Interface
  1 x M.2 2280 (PCIe Gen3 x4)
  1 x USB DOM header
  2 x mini SAS 8643 (for 8 x SATA 6GB/s)
  2 x RS-232 by pin header
  2 x USB 3.2 Gen 1 (5Gb/s) pin header
- Front Panel
  1 x Front Panel (Power LED, HDD LED, Speaker, Power Button, Reset Button)
- Audio
  2x5 pin pin header
- TPM
  2 x 10-pin pin header
- SMBus
  1 x SMBus to backplane
- Expansion
  56-Lane PCIe signal via golden finger
- Watchdog Timer
  software Programmable support 1~255 sec. System reset
- Fan Connector
  1 x 4-pin Smart fan connector (CPU fan)
  2 x 4-pin Smart fan connector (System CPU fan)
- Power Supply
  5V/12V, AT/ATX support
- Operating Temperature
  -20°C ~ 40°C
- Operating Humidity
  5% ~ 95%, non-condensing
- Dimensions
  338.58 mm x 150.5 mm
- Weight
  700g

Features

- PEMUX full-size server / graphic grade solution
- LGA2066 socket supports Intel® Xeon W processor
- Four 288-pin Dual-Channel DDR4 ECC RDIMM/LRDIMM supports up to 256GB
- Supports IPMI VGA display
- Support M.2 2280 SSD (PCIe Gen3 x4)
- Intel® PCIe GbE Intel® i210-AT with NCSI support
- Aquantia AQC107 10 GbE NIC
- Supports RAID function via SATA 6Gb/s
- TPM V2.0 hardware security function supported by TPM module

Packing List

1 x PEMUX-XEW1 single board computer
1 x mini SAS to 4 SATA cable
1 x QIG (Quick Installation Guide)

Ordering Information

Part No.	Description
PEMUX-XEW1-R10	Full-size PEMUX CPU Card supports LGA2066 Intel® Xeon® W C422, DDR4 ECC RDIMM/LRDIMM, VGA, Intel® PCIe GbE, Aquantia 10GbE, USB 3.2 Gen 1 (5Gb/s), USB 2.0, SATA 6Gb/s, HD Audio, IPMI and RoHS
32102-000100-200-RS	SATA Power Cable
CF-2011B-RS	High performance LGA1355/1356/2011 cooler kit, 130W
iRIS-2400-R10	IPMI 2.0 adapter card with AST2400 BMC chip for DDR3 SO-DIMM socket interface
32037-000600-100-RS	1 x mini SAS to 4 SATA Cable
32005-005000-100-RS	RS-232 cable

PEMUX Backplane

Accelerate to The Future

Server grade backplane accommodates multiple PCIe x8 and PCIe x4 add-on cards. It is specially designed for intensive AI computing applications such as deep learning and inference engine that requires more numbers of PCIe slot for accelerator cards. Given the multiple PCIe slots support, it provides a more efficiency solution for end-users.

Selection Guide

4U rack-mount chassis

Model Name		PEMUX-DB-10S1	PEMUX-DB-8S1
Total Slots		11	9
PCIe Lanes	x16		2 (Gen 3.0)
	x8	4 (Gen 3.0)	
	x4	6 (Gen 3.0)	6 (Gen 3.0)
	x1		
PSU type		24+8pin ATX	24+8pin ATX
Chsaais Option		RACK-305G RACK-360G RACK-3000G	RACK-305G RACK-360G RACK-3000G

PEMUX-DB-8S1-R10

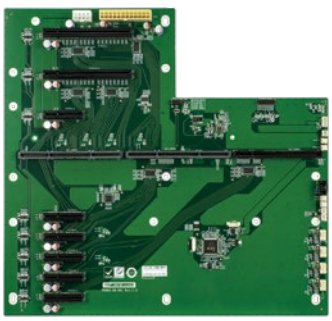

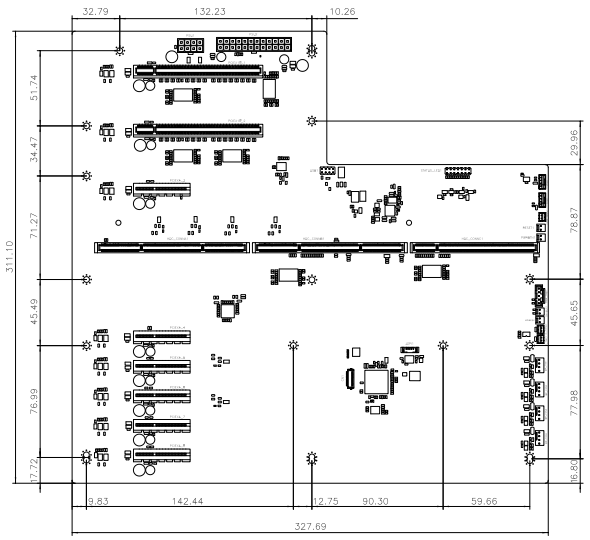

Ordering Information	
PEMUX-DB-8S1-R10	1-Slot PEMUX backplane, 2 PCIe Gen 3.0 x16 w/ x16 slot,6 PCIe Gen3.0 x4 w/ x4 slots, and RoHS
RACK-305G	4U 14-slot full-size rack-mount chassis
RACK-360G	4U 14-slot full-size rack-mount chassis
RACK-3000G	4U 14-slot full-size rack-mount chassis
41005-4223C2-00-RS	Rear card frame; black
41005-4222C3-00-RS	Rear card frame; white

PEMUX-DB-10S1-R10

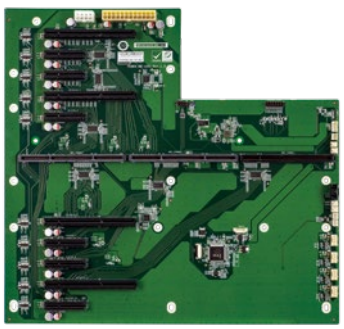

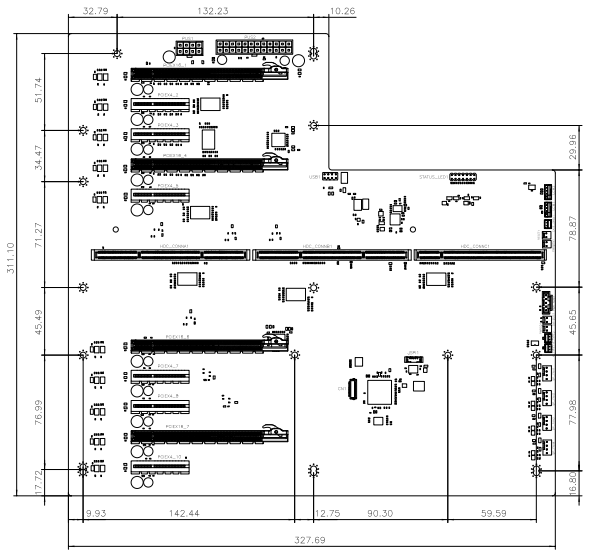

Ordering Information	
PEMUX-DB-10S1-R10	1-Slot PEMUX backplane, 4 PCIe Gen 3.0 x8 w/ x16 slot,6 PCIe Gen3.0 x4 w/ x4 slots, and RoHS
RACK-305G	4U 14-slot full-size rack-mount chassis
RACK-360G	4U 14-slot full-size rack-mount chassis
RACK-3000G	4U 14-slot full-size rack-mount chassis
41005-4223C2-00-RS	Rear card frame; black
41005-4222C3-00-RS	Rear card frame; white

PICMG 1.3

The PICMG 1.3 allows users to protect their investment in PCI technology while taking advantage of the speed and increased bandwidth of PCI Express

What is PICMG 1.3 ?

- **Bringing PCI Express to your SBC with increased speed and bandwidth**
  PICMG 1.3 is designed to interface with PCI Express peripherals on a backplane. The PCI Express interconnects with the backplane and can operate at x1, x4, x8, x16, and more, depending on the capabilities of both the SHB and the backplane.
- **Support PCI on board with flexibility**
  The optional PCI portion of the SHB interconnected with the backplane allows for 32-bit operation. The clock rate can be 33 MHz, 66 MHz, 100 MHz, and 133 MHz, depending on how the backplane and SHB are designed.
- **Miscellaneous IO**
  SATA, USB, IPMB, SMBus, Geographic Addressing, and PCI Wake Up to the backplane are specified, simplifying the cabling on SHB for the system.

PICMG 1.3 Key Features

- **PCI Express**
  20 PCI Express lanes are supported, including PCI Express x16, x4 and x1 configurations
- **ATX power signals are supported**
  Provides AUX voltages for standby power and sleep states (soft starts, wake on LAN), supports PSON#, PWRGD, PWRRBT# and ACPI states

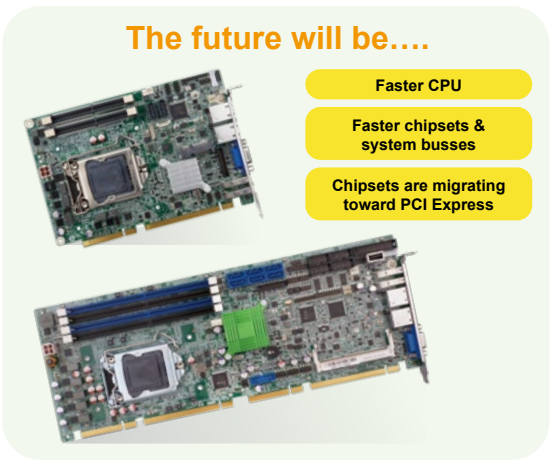

Why PICMG 1.3?

- This new technology is expected to allow PCIe transmission rates to keep pace with processor and I/O advances for the next 10 years or more.
- Same basic mechanical dimensions are maintained to minimize chassis redesign expense
- Better host board power management and simplified I/O cabling
- Supports PCI Express and PCI option cards without driver changing

Graphic & Server Grade PICMG 1.3 Solutions

Full-size PICMG 1.3 Solutions

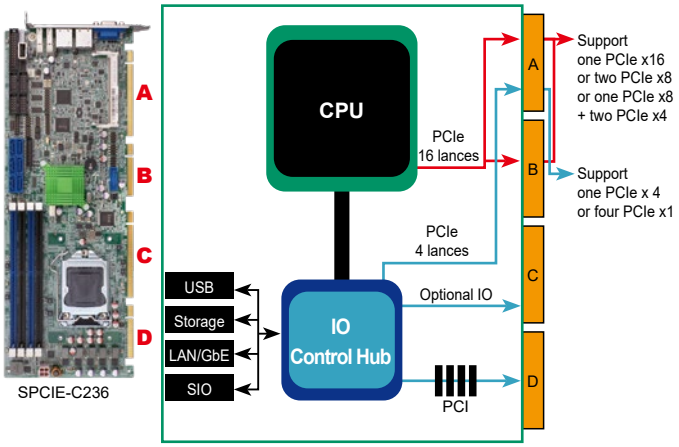

Half-size PICMG 1.3 Solutions

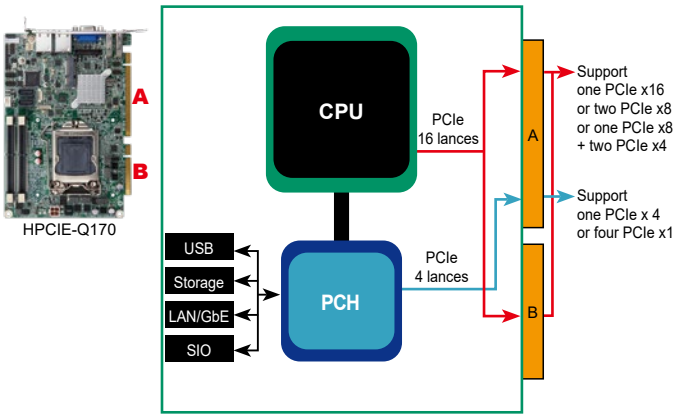

Full-Size PICMG 1.3 PCIe Slot Configuration

Full-size SBC Type			Server & Graphic Grade		Server Grade			
Combination			A	B	C	D	E	F
PCIe Slots Available (Non-switch)	CPU or NB	x16	1	1	-	-	-	-
		x8	-	-	2	2	1	1
		x4	-	-	-		2	2
	PCH or SB	x4	-	1	-	1	-	1
		x1	4	-	4	-	4	-
Backplane Solution			IEI PE/PXE series		IEI SPE/SPXE series			

Half-Size PICMG 1.3 PCIe Slot Configuration

Half-size SBC Type			Any Type		High Performance			
Combination			A	B	C	D	E	F
PCIe Slots Available (Non-switch)	CPU	x16	1	1	-	-	-	-
		x8	-	-	2	2	1	1
		x4	-	-	-		2	2
	PCH	x4	-	1	-	1	-	1
		x1	4	-	4	-	4	-

PICMG 1.3 Selection Guide









Model Name	HPCIE-W480	HPCIE-Q470	HPCIE-C236	HPCIE-Q170
CPU Socket	LGA1200	LGA1200	LGA 1151	LGA 1151
CPU Type	10th generation Intel® Xeon® W, Core™ i9/i7/5/i3 processor	10th generation Intel® Core™ i9/i7/5/i3/ Pentium® and Celeron® processor	Intel® Xeon® E3, Core™ i3, Pentium®, Celeron® processor	Intel® Core™ i7/i5/i3, Pentium®, Celeron® processor
Chipset	Intel® W480E	Intel® Q470E	Intel® C236	Intel® Q170
Memory	2 x 260-pin 2933 MHz dual-channel DDR4 SDRAM SO-DIMMs (ECC&non-ECC support) (system Max. 64 GB)	2 x 260-pin 2933 MHz dual-channel DDR4 SDRAM SO-DIMMs (system Max. 64 GB)	Two 260-pin 1866/2133 MHz dual-channel DDR4 SO-DIMMs (system max. 32 GB)	Two 260-pin 1866/2133 MHz dual-channel DDR4 SO-DIMMs (system max. 32 GB)
Display Interface	Triple independent display 1 x HDMI 1 x USB-C	Triple independent display 1 x HDMI 1 x USB-C	Dual display supported 1 x VGA 1 x iDP interface	Dual display supported 1 x VGA 1 x iDP interface
Ethernet	LAN1: Intel® I225V 2.5GbE controller LAN2: Intel® I225V 2.5GbE controller	LAN1: Intel® I225V 2.5GbE controller LAN2: Intel® I225V 2.5GbE controller	LAN1: Intel® I219-LM with Intel® AMT 11.0 support LAN2: Intel® I211-AT Ethernet controller	LAN1: Intel® I219-LM with Intel® AMT 11.0 support LAN2: Intel® I211-AT Ethernet controller
iRIS Remote Management Module	N/A			
I/O Interface	1 x 422/485 (RS-485 support AFC) 1 x RS-232 3 x USB 3.2 Gen2 4 x USB 2.0	1 x 422/485 (RS-485 support AFC) 1 x RS-232 3 x USB 3.2 Gen2 4 x USB 2.0	1 x 6-pin wafer for KB/MS 2 x RS-232/422/485 2 x USB 3.2 Gen 1 4 x USB 2.0	1 x 6-pin wafer for KB/MS 2 x RS-232/422/485 2 x USB 3.2 Gen 1 4 x USB 2.0
Storage Interface	2 x SATA 6G/s (RAID 0/1 supported) 1 x M.2 (M Key)	2 x SATA 6G/s (RAID 0/1 supported) 1 x M.2 (M Key)	1 x mSATA (SATA & USB signal) 2 x SATA 6Gb/s (RAID 0/1 supported)	1 x mSATA (SATA & USB signal) 2 x SATA 6Gb/s (RAID 0/1 supported)
Audio	Supports by IEI AC-KIT-888S-R10 audio kit			
Digital I/O	8-bit programmable I/O (8-bit GPIO is for programming I/O)		8-bit programmable digital I/O	
Power Consumption	TBD	TBD	5V@0.13A, 12V@7.89A, 3.3V@0.10A, 5VSB@0.20A (Intel® Xeon® E3-1275 v5 3.60 GHz with two 16 GB 2133 MHz DDR4 memory)	5V@0.15A, 12V@8.39A, 3.3V@0.11A, 5VSB@0.21A (Intel® Core™ i7-6700K 4.0GHz with two 16 GB 2133 MHz DDR4 memory)
Watchdog Timer	Software programmable supports 1~255 sec. system reset			
Operation Environment	Temperature Range: -20ºC ~ 60ºC (-4°F ~ 140°F) Relative Humidity: 5% ~ 95%, non-condensing			
Expansion Slot	16-lanes PCIe via golden finger 4-lanes PCIe via golden finger 1 x M.2 (A Key) 1 x M.2 (M Key)	16-lanes PCIe via golden finger 4-lanes PCIe via golden finger 1 x M.2 (A Key) 1 x M.2 (M Key)	16-lanes PCIe via golden finger 4-lanes PCIe via golden finger 1 x Full/Half-size PCIe Mini card slot (supports mSATA)	16-lanes PCIe via golden finger 4-lanes PCIe via golden finger 1 x Full/Half-size PCIe Mini card slot (supports mSATA)
CPU Cooler	CF-1150SB-R11 CF-1150SC-R20 CF-1150SE-R11	CF-1150SB-R11 CF-1150SC-R20 CF-1150SE-R11	CF-1150SB-R11 CF-1150SC-R20 CF-1150SE-R11	CF-1150SB-R11 CF-1150SC-R20 CF-1150SE-R11

PICMG 1.3 Selection Guide

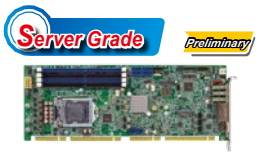

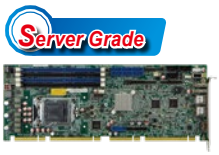

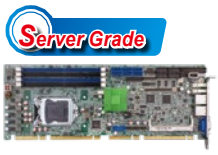



Model Name	SPCIE-W480	SPCIE-C246	SPCIE-C236	SPCIE-C2260-i2
CPU Socket	LGA1200	LGA1151	LGA1151	LGA 1150
CPU Type	10th generation Intel® Xeon® W, Core™ i9/i7/5/i3 processor	Intel® Xeon® E, 8th/9th generation Core™ i9/i7/i5/i3, Pentium® or Celeron® processor	Intel® Xeon® E3, Core™ i3, Pentium®, Celeron® processor	Intel® Xeon® E3, Core™ i3, Pentium®, Celeron® processor
Chipset	Intel® W480E	Intel® C246	Intel® C236	Intel® C226
Memory	Four 288-pin 2933 MHz Dual-Channel DDR4 SDRAM Unbuffered DIMMs (ECC&non-ECC support) (system Max. 128 GB)	Four 288-pin 2666MHz dual-channel DDR4 SDRAM unbuffered DIMMs support up to 64GB ECC & non-ECC	Four 288-pin 1866/2133 MHz Dual-Channel DDR4 ECC & non-ECC unbuffered DIMM supported up to 64GB	Four 240-pin 1600/1333 MHz dual-channel DDR3 & DDR3L SDRAM unbuffered DIMMs (system max. 32 GB)
Display Interface	Triple independent display 1 x HDMI 2 x Internal 180º Type-C DP	Dual display supported 1 x HDMI 1 x DP	Triple display supported 1 x VGA 1 x iDP interface	Dual display supported 1 x VGA 1 x iDP interface
Ethernet	LAN1: Intel® I225V 2.5GbE controller LAN2: Intel® I225V 2.5GbE controller	LAN1: Intel® I219LM PHY LAN2: Intel® I211-AT PCIe controller (Co-lay I210-AT)	LAN1: Intel® I219LM Clarkville-V with Intel® AMT 11.0 supported LAN2: Intel® I210 PCIe controller	LAN1: Intel® I217LM with Intel® AMT 9.0 support LAN2: Intel® I210-AT PCIe controller with NCSI support
iRIS Remote Management Module	N/A		1 x iRIS-2400 slot (Optional)	1 x iRIS-2400 slot
I/O Interface	4 x USB 3.2 Gen2 2 x USB 3.2 Gen1 1 x KB/MS 2 x RS-232 2 x RS-422/485 (RS485 support AFC) 6 x USB 2.0	1 x 6-pin wafer for KB/MS 1 x RS-422/485 3 x RS-232 4 x USB 3.2 Gen 1 7 x USB 2.0	1 x 6-pin wafer for KB/MS 1 x LPT 2 x RS-232 2 x RS-232/422/485 4 x USB 3.2 Gen 1 7 x USB 2.0	1 x 6-pin wafer for KB/MS 1 x LPT 1 x RS-422/485 4 x RS-232 4 x USB 3.2 Gen 1 8 x USB 2.0
Storage Interface	4 x SATA 6Gb/s (RAID 0/1/5/10 supported) 1 x M.2 (B Key) 1 x M.2 (M Key)	6 x SATA 6Gb/s (RAID 0/1/5/10 supported)	6 x SATA 6Gb/s (RAID 0/1/5/10 supported)	6 x SATA 6Gb/s (RAID 0/1/5/10 supported)
Audio	Supports by IEI AC-KIT-888S-R10 audio kit			
Digital I/O	8-bit programmable digital I/O			
Power Consumption	TBD	5V@3.12A, 12V@6.85A, 3.3V@1.13A, 5VSB@0.15A (4.0 GHz Intel® Core™ i7-8700K CPU with four 16 GB 2666 MHz DDR4 memory)	5V@3.22A, 12V@6.81A, 3.3V@1.21A, 5VSB@0.18A (Intel® Xeon® E3-1275 v5 3.60 GHz CPU with 64GB (four 16GB) 2133 MHz DDR4 memory)	5V@3.55A, 12V@0.37A, Vcore_12V@7.61A, 3.3V@1.55A, 5VSB@0.13A (Intel® E3-1240 v3 3.4GHz CPU with 16 GB (four 4GB) 1333 MHz DDR3 memory)
Watchdog Timer	Software programmable supports 1~255 sec. system reset			
Operation Environment	Temperature Range: -20ºC ~ 60ºC (-4°F ~ 140°F) Relative Humidity: 5% ~ 95%, non-condensing			
Expansion Slot	16-lanes PCIe via golden finger 4-lanes PCIe via golden finger 4 x PCI signal via golden finger 1 x M.2 (A Key) 1 x M.2 (B Key) 1 x M.2 (M Key)	1 x M.2 M key 16-lanes PCIe via golden finger 4-lanes PCIe via golden finger 4 x PCI signal via golden finger	1 x Full-size PCIe Mini card slot (support mSATA) 16-lanes PCIe via golden finger 4-lanes PCIe via golden finger 4 x PCI signal via golden finger	1 x Full-size PCIe Mini card slot (support mSATA)
CPU Cooler	CF-1150SB-R11 CF-1150SC-R20 CF-1150SE-R11	CF-1150SB-R11 CF-1150SC-R20 CF-1150SE-R11	CF-1150SB-R11 CF-1150SC-R20 CF-1150SE-R11	CF-1150SB-R11 CF-1150SC-R20 CF-1150SE-R11 CF-1150SF-R10

PICMG 1.3 Selection Guide



Model Name	PCIE-Q470	PCIE-Q370	PCIE-Q170	PCIE-H810	PCIE-Q870-i2
CPU Socket	LGA1200	LGA1151	LGA1151	LGA 1150	LGA 1150
CPU Type	10th generation Intel® Core™ i9/i7/5/i3/Celeron® and Pentium® processor	8th/9th Generation Core™ i9/i7/ i5/i3, Celeron® and Pentium® processor	6th generation Intel® Core™ i7/ i5/i3, Celeron® and Pentium® processor	Intel® Core™ i7/i5/i3, Pentium®, Celeron® processor	Intel® Core™ i7/i5/i3, Pentium®, Celeron® processor
Chipset	Intel® Q470E	Intel® Q370	Intel® Q170	Intel® H81	Intel® Q87
Memory	Four 288-pin 2933 MHz Dual-Channel DDR4 SDRAM Unbuffered DIMMs (system Max. 128 GB)	Four 288-pin 2666MHz dual-channel DDR4 SDRAM unbuffered DIMMs support up to 64GB	Four 288-pin 1866/2133 MHz dual-channel non-ECC unbuffered DDR4 DIMMs (system max. 64 GB)	Two 240-pin 1600/1333 MHz dual-channel DDR3 & DDR3L SDRAM unbuffered DIMMs (system max. 16 GB)	Four 240-pin 1600/1333 MHz dual-channel DDR3 & DDR3L SDRAM unbuffered DIMMs (system max. 32 GB)
Display Interface	Triple independent display 1 x HDMI 2 x Internal 180º Type-C DP	Dual display supported 1 x VGA 1 x DP PCIE-Q370-HDMI 1 x HDMI 1 x DP	Triple display supported 1 x VGA 1 x iDP interface	Dual display supported 1 x VGA 1 x iDP interface	Dual display supported 1 x VGA 1 x iDP interface
Ethernet	LAN1: Intel® I225V 2.5GbE controller LAN2: Intel® I225V 2.5GbE controller	LAN1: Intel® I219LM PHY LAN2: Intel® I211-AT PCIe controller (Co-lay I210-AT)	LAN1: Intel® I219LM Clarkville-V with Intel® AMT 11.0 supported LAN2: Intel® I210 PCIe controller	LAN1: Realtek RTTL8111E PCIe controller LAN: Realtek RTTL8111E PCIe controller	LAN1: Intel® I217LM with Intel® AMT 9.0 support LAN2: Intel® I210-AT PCIe controller with NCSI support
iRIS Remote Management Module	N/A	N/A	1 x iRIS-2400 slot (optinoal)	N/A	1 x iRIS-2400 slot
I/O Interface	4 x USB 3.2 Gen2 2 x USB 3.2 Gen1 1 x KB/MS 2 x RS-232 2 x RS-422/485 (RS485 support AFC) 6 x USB 2.0	1 x 6-pin wafer for KB/MS 1 x RS-422/485 3 x RS-232 4 x USB 3.2 Gen 1 7 x USB 2.0	1 x 6-pin wafer for KB/MS 1 x LPT 2 x RS-232 2 x RS-232/422/485 4 x USB 3.2 Gen 1 7 x USB 2.0	1 x 6-pin wafer for KB/MS 1 x LPT 1 x RS-422/485 2 x RS-232 2 x USB 3.2 Gen 1 8 x USB 2.0	1 x 6-pin wafer for KB/MS 1 x LPT 1 x RS-422/485 4 x RS-232 4 x USB 3.2 Gen 1 8 x USB 2.0
Storage Interface	4 x SATA 6Gb/s (RAID 0/1/5/10 supported) 1 x M.2 (B Key) 1 x M.2 (M Key)	6 x SATA 6Gb/s (RAID 0/1/5/10 supported)	6 x SATA 6Gb/s (RAID 0/1/5/10 supported)	2 x SATA 3Gb/s 2 x SATA 6Gb/s	6 x SATA 6Gb/s (RAID 0, 1, 5, 10 supported)
Audio	Supports by IEI AC-KIT-888S-R10 audio kit				IEI AC-KIT-888S-R10 7.1-channel HD Audio kit via the on-board 10-pin header connector
Digital I/O	8-bit programmable digital I/O				
Power Consumption	TBD	5V@3.12A, 12V@6.85A, 3.3V@1.13A, 5VSB@0.15A (4.0 GHz Intel® Core™ i7-8700K CPU with four 16 GB 2666 MHz DDR4 memory)	5V@3.12A, 12V@6.85A, 3.3V@1.13A, 5VSB@0.15A (Intel® Core™ i7-6700K 4.0GHz CPU with 64GB (four 16GB) 2133 MHz DDR4 memory)	5V@3.41A, 12V@0.35A, Vcore_12V@7.52A, 3.3V@1.41A, 5VSB@0.12A (Intel® Core™ i7-4770K 3.90 GHz CPU with 8 GB (two 4 GB) 1333 MHz DDR3 memory)	5V@3.55A, 12V@0.37A, Vcore_12V@7.61A, 3.3V@1.55A, 5VSB@0.13A (3.4GHz Intel® Qual CoreCPU with four GB 1333 MHz DDR3 memory)
Watchdog Timer	Software programmable supports 1~255 sec. system reset				
Operation Environment	Temperature Range: -20ºC ~ 60ºC (-4°F ~ 140°F) Relative Humidity: 5% ~ 95%, non-condensing				
Expansion Slot	16-lanes PCIe via golden finger 4-lanes PCIe via golden finger 4 x PCI signal via golden finger 1 x M.2 (A Key) 1 x M.2 (B Key) 1 x M.2 (M Key)	1 x M.2 M key 1 x PCIe x16 & 4 x PCIe x1 signal via golden finger 4 x PCI signal via golden finger	1 x Full/Half-size PCIe Mini card slot 4 x PCI signal via golden finger	1 x Full-size PCIe Mini card slot (support mSATA)	1 x Full-size PCIe Mini card slot (support mSATA)
CPU Cooler	CF-1150SB-R11 CF-1150SC-R20 CF-1150SE-R11	CF-1150SB-R11 CF-1150SC-R20 CF-1150SE-R11	CF-1150SB-R11 CF-1150SC-R20 CF-1150SE-R11	CF-1150SB-R11 CF-1150SC-R20 CF-1150SE-R11 CF-1150SF-R10	CF-1150SB-R11 CF-1150SC-R20 CF-1150SE-R11 CF-1150SF-R10

HPCIE-Q470/W480

Half-size PICMG 1.3 CPU Card supports LGA1200 Intel® 10th Generation Core™ i9/i7/i5/i3, Celeron® and Pentium® CPU with Intel® Q470E/W480E, DDR4 SODIMM, HDMI, Type-C DP, Dual Intel® 2.5GbE, M.2, HD Audio, Intel® AMT and RoHS

Preliminary

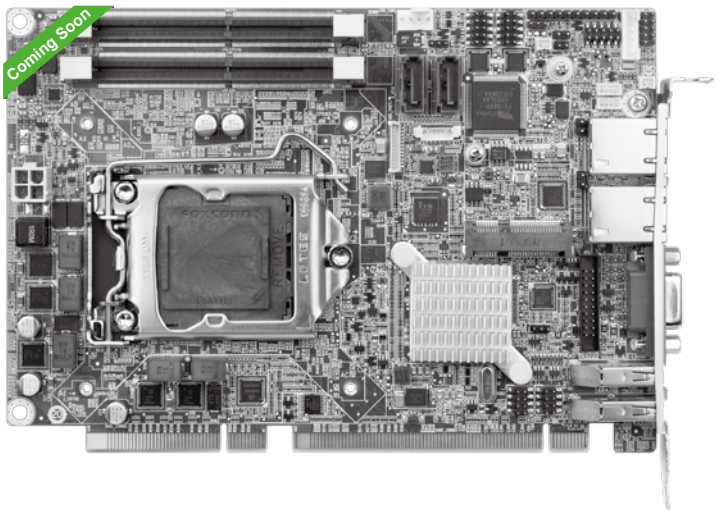

Specifications

- CPU
  LGA1200 socket supports 10th generation Intel® Core™ i9/i7/i5/i3, Celeron® and Pentium® processor
- Chipset: Intel® Q470E/W480E
- BIOS: AMI UEFI BIOS
- Memory
  Two 260-pin 2666/2400 MHz Dual-channel DDR4 ECC and non-ECC unbuffered SO-DIMMs support up to 64GB
- Graphics Engine
  Intel® HD Graphics Gen 9 Engines with Low power 16 execution unit, supports DX2015, OpenGL 5.X and OpenCL2.x, ES 2.0
- Display Output
  1 x HDMI (up to 4096x2304 @ 30Hz)
  1 x Type-C DP (up to 4096x2304 @ 60Hz)
- Ethernet
  LAN1: Intel® I219LM PCIe controller with AMT 11.0 support
  LAN2: Intel® I211AT PCIe controller
- External I/O Interface
  3 x USB 3.2 Gen2
- Internal I/O Interface
  1 x RS-232 (2x5 pin, P=2.0)
  1 x RS-422/485 (2x5 pin, P=2.0) (RS-485 support AFC)
  2 x SATA 6G/s (RAID 0/1 supported)
  4 x USB 2.0 (2x4 pin, P=2.54)
- SMBus: 1 x SMBus (1x4 pin)
- I²C: 1 x I²C (1x4 pin)
- Audio
  Realtek ALC888S HD Audio codec
  1 x Analog audio (2x5 pin)
- Front Panel
  1 x Front Panel (1x10 pin, Power LED, HDD LED, Speaker, Power Button, Reset Button)
- LAN LED: 2 x LAN LED (1x2 pin)
- Expansion
  16-lanes PCIe signal from CPU via golden finger
  (supports x16, or x8 + x8, or x4 + x4 + x8)
  4-lanes PCIe signal from PCH via golden finger
  1 x M.2 A key (2230) with USB 2.0
  1 x M.2 M key (2280/2242)
- Digital I/O
  1 x 8-bit digital I/O (2x5 pin)
- TPM: 1 x TPM (2x10 pin)
- Fan Connector: 1 x CPU smart fan connector (1x4 pin)
- Chassis Open: 1 x Chassis intrusion (1x2 pin)
- Power Supply
  5V/12V, ATX/AT power supply
  Support AT/ATX mode
  ErP/EuP Compliant
- Watchdog Timer: Software programmable support 1~255 sec. system reset
- Power Consumption: TBD
- Operating Temperature: -20°C ~ 60°C
- Storage Temperature: -30°C ~ 70°C
- Operating Humidity: 5% ~ 95%, non-condensing
- Dimensions: 169 mm x 126 mm
- Weight: GW: 1000g / NW: 420g
- CE/FCC compliant



TPM 2.0 Support



Features

- 10th Generation Intel® Core™ i9/i7/i5/i3, Celeron® and Pentium® processor
- Dual-channel DDR4 2666/2400MHz
- Support HDMI and Type-C DP
- Support M.2 A key for WLAN expansion and M.2 M key for Storage

Packing List

1 x HPCIE-Q470/W480 single board computer
1 x SATA cable
1 x QIG

Ordering Information

Part No.	Description
HPCIE-Q470-R10	Half-size PICMG 1.3 CPU Card supports 14nm LGA1200 Intel® 10th Generation Core™ i9/i7/i5/i3, Celeron® and Pentium® processor with Intel® Q470/W480, DDR4 SO-DIMM, HDMI, Dual DP, Dual Intel® PCIe GbE, USB 3.2, SATA 6Gb/s, M.2, HD Audio, Intel® AMT and RoHS
HPCIE-W480-R10	Half-size PICMG 1.3 CPU Card supports 14nm LGA1200 Intel® 10th Generation Core™ i9/i7/i5/i3, Celeron® and Pentium® processor with Intel® Q470/W480, DDR4 SO-DIMM, HDMI, Dual DP, Dual Intel® PCIe GbE, USB 3.2, SATA 6Gb/s, M.2, HD Audio, Intel® AMT and RoHS
19800-000049-RS	LPT flat cable, 240mm, P=2.54
19800-000075-RS	PS/2 KB/MS cable with bracket, 220mm, P=2.0
19800-003100-100-RS	Dual port USB cable with bracket, 30mm, P=2.54
19800-010500-200-RS	USB 3.0 cable 457mm with bracket
32102-000100-200-RS	SATA power cable, MOLEX 5264-4P to SATA15P
32205-000702-100-RS	RS-232 cable, 230mm, P=2.54
CF1156A-RS-R11	High-performance LGA1155/1156 cooler kit, 1U chassis compatible 73W
CF-1156C-RS	LGA1155/LGA1156 cooler kit, 1U chassis compatible, 45W
CF-1156D-RS	LGA1155/LGA1156 cooler kit, 1U chassis compatible, 65W
CF-1156E-R11	High-performance LGA1155/1156 cooler kit, 95W
TPM-IN03-R10	20-pin Infineon SPI TPM2.0 module, software mangement tool, firmware V7.63

HPCIE-C236

Half-size PICMG 1.3 CPU Card supports LGA 1151 Intel® Xeon® E3, Core™ i3/Pentium®/ Celeron® CPU with Intel® C236, ECC & non-ECC DDR4 SO-DIMM, VGA, iDP, Dual Intel® PCIe GbE, USB 3.2 Gen 1 (5Gb/s), SATA 6Gb/s, mSATA, HD Audio, Intel® AMT and RoHS

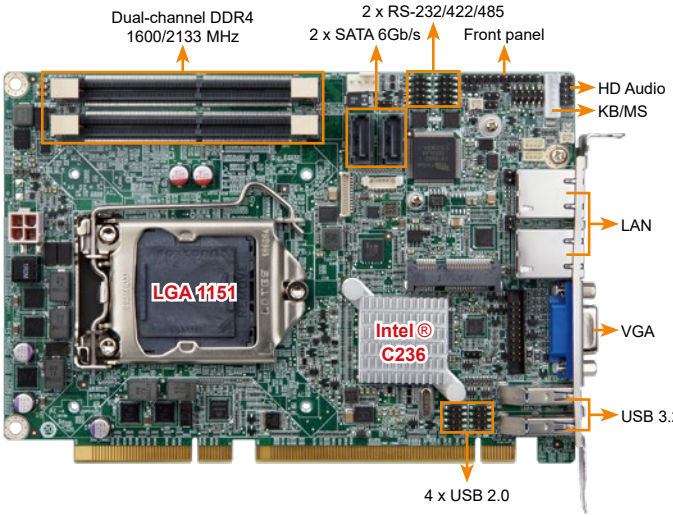

PCIe Mini slot provides mSATA and USB signal for full-size or half-size mSATA SSD and wireless LAN card.

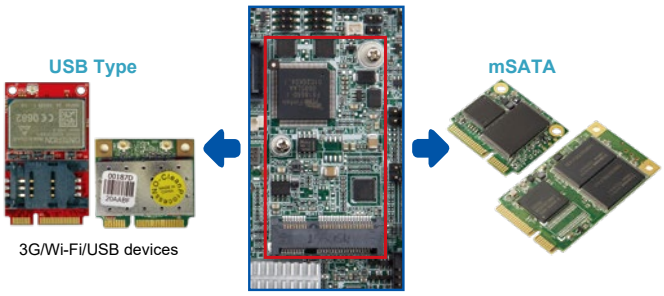



Specifications

- CPU
  LGA 1151 socket supports Intel® Xeon® E3 v5/v6, 6th/7th generation Core™ i3, Pentium® or Celeron® processor
- Chipset
  Intel® C236
- Memory
  Two 260-pin 1866/2133 MHz dual-channel DDR4 ECC and non-ECC unbuffered SO-DIMMs support up to 32 GB
- BIOS
  UEFI BIOS
- Graphics Engine
  Intel® HD Graphics Gen 9 supports DX11/12, OpenCL 2.x and OpenGL 4.3/4.4
  Decode/Encode for HEVC, VP8, VP9, VDENC
- Display Output
  1 x VGA (up to 1920x1200@60 Hz)
  1 x iDP interface for HDMI, LVDS, VGA, DVI, DP (up to 3840x2160@60 Hz)
- Ethernet
  LAN1: Intel® I219LM Clarkville-V with Intel® AMT 11.0 support
  LAN2: Intel® I210 PCIe controller
- External I/O Interface
  2 x USB 3.2 Gen 1
- Internal I/O Interface
  1 x KB/MS (1x6 pin)
  1 x mSATA (SATA & USB signal)
  2 x RS-232/422/485 (2x5 pin, P=2.0)
  2 x SATA 6Gb/s (RAID 0, 1 supported)
  4 x USB 2.0 (2x4 pin, P=2.0)
- Front Panel
  1 x Front panel (1x10 pin, power LED, HDD LED, speaker, power button, reset button)
- LAN LED
  2 x LAN LED (1x2 pin)
- Audio
  Support 7.1-channel HD Audio by IEI AC-KIT-888S-R10 kit
- SMBus
  1 x SMBus (1x4 pin)
- I²C
  1 x I²C (1x4 pin)
- Expansion
  16-lane PCIe signal from CPU via golden finger
  (supports x16, or x8 + x8, or x4 + x4 + x8)
  4-lane PCIe signal from Q170 via golden finger
  1 x Full/Half-size PCIe Mini card slot (supports mSATA)
- Watchdog Timer
  Software programmable supports 1~255 sec. system reset
- Digital I/O
  8-bit digital I/O (2x5 pin)
- Fan Connector
  1 x CPU smart fan (1x4 pin)
- Power Supply
  5V/12V, AT/ATX support
- Power Consumption
  5V@0.13A, 12V@7.89A, 3.3V@0.10A, 5VSB@0.20A
  (Intel® Xeon® E3-1275 v5 3.60 GHz with two 16 GB 2133 MHz DDR4 memory)
- Operating Temperature
  -20°C ~ 60°C
- Operating Humidity
  5% ~ 95%, non-condensing
- Dimensions
  169 mm x 126 mm
- Weight
  GW: 1000g / NW: 420g
- CE/FCC compliant

Features

- PICMG 1.3 full-size CPU card
- LGA1151 Intel® 8th Generation Xeon® E3, Core™ i7/i5/i3, Celeron® and Pentium® processor supported
- Dual-channel DDR4 2666MHz
- Support HDMI and DP display
- Intel® PCIe GbE with Intel® AMT 11.0 supported
- Support M.2 M key for storage (PCIe x4)
- Supports RAID 0, 1, 5, 10 function via SATA 6Gb/s

Packing List

1 x HPCIE-C236 single board computer
1 x SATA cable
1 x QIG

Ordering Information

Part No.	Description
HPCIE-C236-R10	Half-size PICMG 1.3 CPU card supports LGA 1151 Intel® Xeon® E3, Core™ i3/Pentium®/Celeron® CPU with Intel® C236, ECC & non-ECC DDR4 SO-DIMM, VGA, iDP, dual Intel® PCIe GbE, USB 3.2 Gen 1 (5Gb/s), SATA 6Gb/s, mSATA, HD Audio, Intel® AMT and RoHS
19800-000075-RS	PS/2 KB/MS cable with bracket, 220mm, P=2.0
32102-000100-200-RS	SATA power cable, MOLEX 5264-4P to SATA15P
32205-002700-200-RS	RS-232/422/485 cable, 200mm, P=2.0
AC-KIT-892HD-R10	7.1-channel HD Audio kit with Realtek ALC892 supports dual audio streams
CF-115XA-R10	High-performance LGA 1155/LGA 1156 cooler kit, 1U chassis compatible, 73W
CF-115XC-R10	LGA 1155/LGA 1156 cooler kit, 1U chassis compatible, 45W
CF-115XD-R10	LGA 1155/LGA 1156 cooler kit, 1U chassis compatible, 65W
DP-DP-R10	DisplayPort to DisplayPort converter board (for IEI iDP connector)
DP-DVI-R10	DisplayPort to DVI-D converter board (for IEI iDP connector)
DP-HDMI-R10	DisplayPort to HDMI converter board (for IEI iDP connector)
DP-LVDS-R10	DisplayPort to LVDS converter board (for IEI iDP connector)
DP-VGA-R10	DisplayPort to VGA converter board (for IEI iDP connector)
SAIDE-KIT01-R10	SATA to IDE/CF converter board

HPCIE-Q170

Half-size PICMG 1.3 CPU Card supports LGA 1151 Intel® Core™ i7/i5/i3, Pentium® or Celeron® CPU with Intel® Q170, DDR4 SO-DIMM, VGA/iDP, Dual Intel® PCIe GbE, USB 3.2 Gen 1 (5Gb/s), SATA 6Gb/s, mSATA, HD Audio, Intel® AMT and RoHS

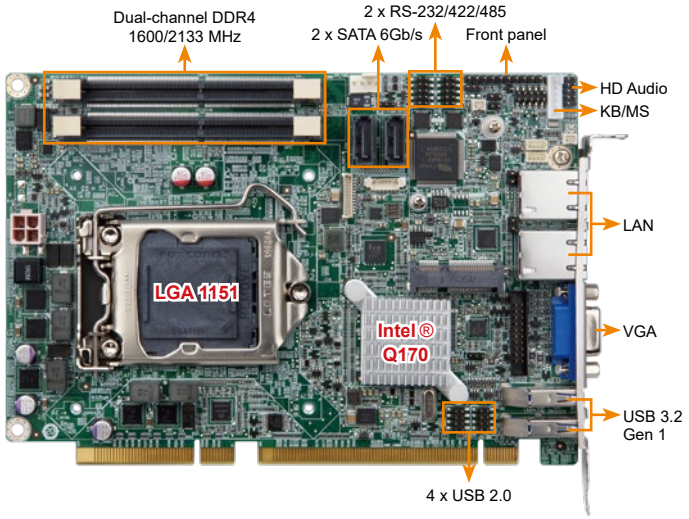

Intel® 6th generation Core™ CPU + Intel® Q170 support 3 controllers of PCI Express Gen 3

Number of PCIe Controller	Configuration
1	PCIe x16
2	PCIe x8, PCIe x8
3	PCIe x4, PCIe x4, PCIe x8

Sets PCIe x16 signal via BIOS

```
PEG port configuration          [1 x8, 2 x4 PCIE]
USB Power SW1                   [+5V DUAL]
USB Power SW2                   [+5V DUAL]
```

PCIe Mini slot provides mSATA and USB signal for full-size or half-size mSATA SSD and wireless LAN card.

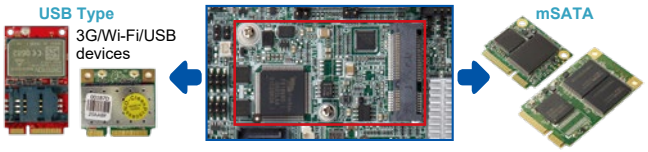





Specifications

- ◆ CPU
  LGA 1151 socket supports Intel® 6th/7th generation Core™ i7/i5/i3, Pentium® or Celeron® processor
- ◆ Chipset
  Intel® Q170
- ◆ Memory
  Two 260-pin 1866/2133 MHz dual-channel DDR4 non-ECC unbuffered SO-DIMMs support up to 32 GB
- ◆ BIOS
  UEFI BIOS
- ◆ Graphics Engine
  Intel® HD Graphics Gen 9 supports DX11/12, OpenCL 2.x and OpenGL 4.3/4.4
  Decode/Encode for HEVC, VP8, VP9, VDENC
- ◆ Display Output
  1 x VGA (up to 1920x1200@60 Hz)
  1 x iDP interface for HDMI, LVDS, VGA, DVI, DP (up to 3840x2160@60 Hz)
- ◆ Ethernet
  LAN1: Intel® I219LM Clarkville-V with Intel® AMT 11.0 support
  LAN2: Intel® I211 PCIe controller
- ◆ External I/O Interface
  2 x USB 3.2 Gen 1 (5Gb/s)
- ◆ Internal I/O Interface
  1 x KB/MS (1x6 pin)
  1 x mSATA (SATA & USB signal)
  2 x RS-232/422/485 (2x5 pin, P=2.0)
  2 x SATA 6Gb/s (RAID 0, 1 supported)
  4 x USB 2.0 (2x4 pin, P=2.0)
- ◆ Front Panel
  1 x Front panel (1x10 pin, power LED, HDD LED, speaker, power button, reset button)
- ◆ LAN LED
  2 x LAN LED (1x2 pin)
- ◆ Audio
  Support 7.1-channel HD Audio by IEI AC-KIT-888S-R10 kit
- ◆ SMBus
  1 x SMBus (1x4 pin)
- ◆ I²C
  1 x I²C (1x4 pin)
- ◆ Expansion
  16-lane PCIe signal from CPU via golden finger
  (supports x16, or x8 + x8, or x4 + x4 + x8)
  4-lane PCIe signal from Q170 via golden finger
  1 x Full/Half-size PCIe Mini card slot (supports mSATA)
- ◆ Watchdog Timer
  Software programmable supports 1~255 sec. system reset
- ◆ Digital I/O
  8-bit digital I/O (2x5 pin)
- ◆ Fan Connector
  1 x CPU smart fan (1x4 pin)
- ◆ Power Supply
  5V/12V, AT/ATX support
- ◆ Power Consumption
  5V@0.15A, 12V@8.39A, 3.3V@0.11A, 5VSB@0.21A
  (Intel® Core™ i7-6700K 4.0GHz with two 16 GB 2133 MHz DDR4 memory)
- ◆ Operating Temperature
  -20°C ~ 60°C
- ◆ Operating Humidity
  5% ~ 95%, non-condensing
- ◆ Dimensions
  169 mm x 126 mm
- ◆ Weight
  GW: 1000g / NW: 420g
- ◆ CE/FCC compliant

Features

- PICMG 1.3 half-size CPU card
- LGA 1151 Intel® 6th/7th generation Core™ i7/i5/i3, Pentium® or Celeron® processor supported
- Two 260-pin 1866/2133 MHz dual-channel DDR4 SO-DIMMs support up to 32 GB
- Supports dual independent display by VGA & internal DP pin header
- PCIe Mini card slot supports mSATA & USB 2.0
- Intel® PCIe GbE with Intel® AMT 11.0 supported
- Supports RAID 0, 1 function via SATA 6Gb/s
- IEI jumper-less function

Packing List

1 x HPCIE-Q170 single board computer
1 x SATA cable
1 x QIG

Ordering Information

Part No.	Description
HPCIE-Q170-R10	Half-size PICMG 1.3 CPU card supports LGA 1151 Intel® Core™ i7/i5/i3, Pentium® or Celeron® CPU with Intel® Q170, DDR4 SO-DIMM, dual Intel® PCIe GbE, VGA, iDP, mSATA, SATA 6Gb/s, USB 3.2 Gen 1 (5Gb/s), PCIe Mini, HD Audio, Intel® AMT and RoHS
19800-000075-RS	PS/2 KB/MS cable with bracket, 220mm, P=2.0
32102-000100-200-RS	SATA power cable, MOLEX 5264-4P to SATA15P
32205-002700-200-RS	RS-232/422/485 cable, 200mm, P=2.0
AC-KIT-892HD-R10	7.1-channel HD Audio kit with Realtek ALC892 supports dual audio streams
CF-115XA-R10	High-performance LGA 1155/LGA 1156 cooler kit, 1U chassis compatible, 73W
CF-115XC-R10	LGA 1155/LGA 1156 cooler kit, 1U chassis compatible, 45W
CF-115XD-R10	LGA 1155/LGA 1156 cooler kit, 1U chassis compatible, 65W
DP-DP-R10	DisplayPort to DisplayPort converter board (for IEI iDP connector)
DP-DVI-R10	DisplayPort to DVI-D converter board (for IEI iDP connector)
DP-HDMI-R10	DisplayPort to HDMI converter board (for IEI iDP connector)
DP-LVDS-R10	DisplayPort to LVDS converter board (for IEI iDP connector)
DP-VGA-R10	DisplayPort to VGA converter board (for IEI iDP connector)
SAIDE-KIT01-R10	SATA to IDE/CF converter board

PICMG 1.3 Passive Backplane for Half-Size CPU Card

Selection Guide

PAC series wall-mount chassis 4U rack-mount chassis

PICMG 1.3 (PCIe+PCI)	Model	HPE2-3S1	HPXE2-5S1	HPXE2-6S1	HPXE2-7S1	HPXE2-8S1
Total Slot		5	5	6	7	8
Expansion Slots	PCIe x16	1 (Gen 3.0)	1 (Gen 3.0)	1 (Gen 3.0)		
	PCIe x8				2 (Gen 3.0)	2 (Gen 3.0)
	PCIe x4	1 (Gen 3.0)				
	PCIe x1					
	PCI-X					
	PCI		2	3	3	4
PSU Type			24+4-pin ATX	24+4-pin ATX	24+4-pin ATX	24+4-pin ATX
Chassis Option		PAC-400AI PR-1500G	PR-1500G	PAC-1000 PAC-106G	PAC-700G PAC-1700G	PAC-125G
		RACK-500AI	RACK-500G			RACK-3000G RACK-360G
Note		ATX power	ATX power	ATX power	ATX power	ATX power

HPE2-3S1-R10

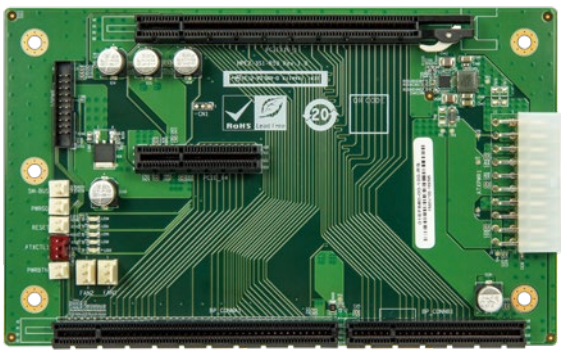

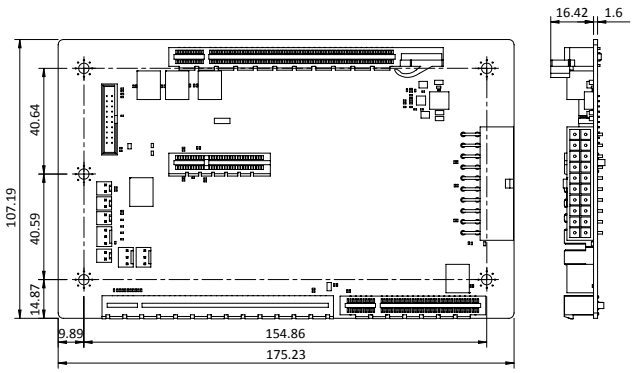

Ordering Information	
HPE2-3S1-R10	5-slot PICMG 1.3 backplane for half-size SBC, with one PCIe x16 Slot and one PCIe x4 slot, RoHS (PCIe Gen 3.0)
PAC--400AI	4-slot half-size compact chassis
PR-1500G	5-slot half-size compact chassis
RACK-500AI	5U 5-slot full-size rackmount chassis

HPXE2-5S1-R10



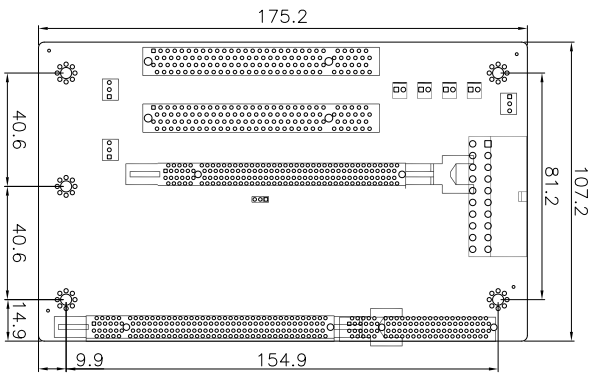

Ordering Information	
HPXE2-5S1-R10	5-slot PICMG 1.3 backplane for half-size SBC, with two PCI slots and one PCIe x16 slot (x16 signal) (PCIe Gen 3.0)
PR-1500G	5-slot half-size compact chassis
RACK-500G	5U 5-slot full-size rackmount chassis

HPXE2-6S1-R10



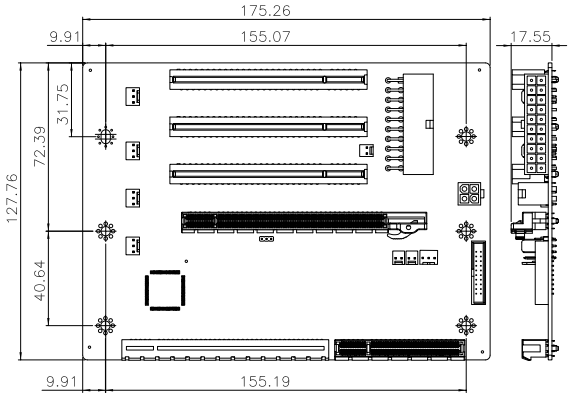

Ordering Information	
HPXE2-6S1-R10	6-slot PICMG 1.3 backplane for half-size SBC, with three PCI slots and one PCIe x16 slot (x16 signal) (PCIe Gen 3.0)
PAC-1000G	6-slot full-size compact chassis
PAC-106G	6-slot full-size compact chassis

HPXE2-7S1-R10

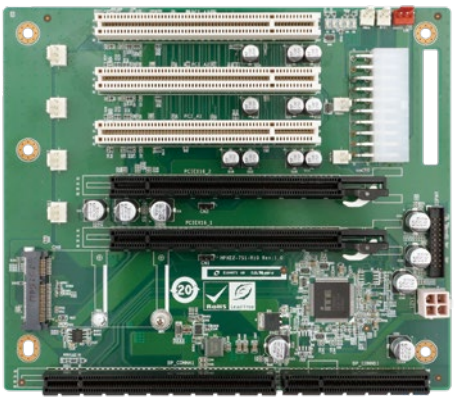

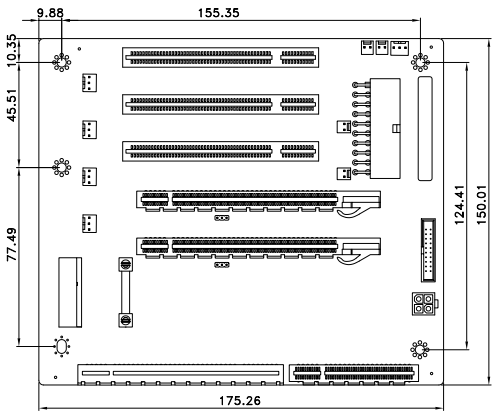

Ordering Information	
HPXE2-7S1-R10	7-slot PICMG 1.3 backplane for half-size SBC, with three PCI slots and two PCIe x16 slots (x8 signal) (PCIe Gen 3.0)
PAC-700G	7-slot half-size compact chassis
PAC-1700G	7-slot full-size compact chassis

HPXE2-8S1-R10

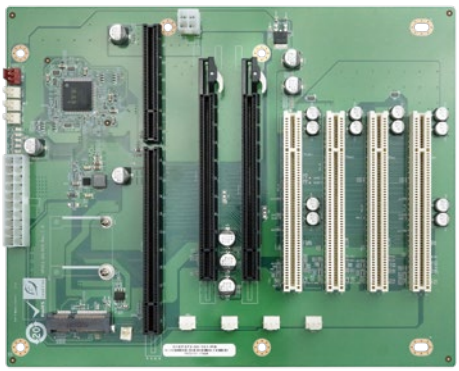

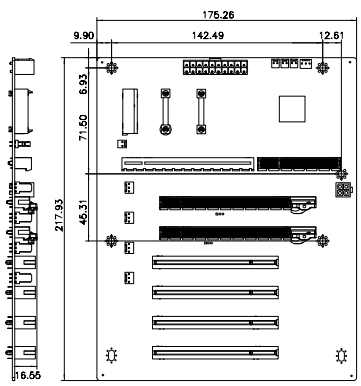

Ordering Information	
HPXE2-8S1-R10	8-slot PICMG 1.3 backplane for half-size SBC, with four PCI slots and two PCIe x 16 slot (x8 signal) (PCIe Gen 3.0)
PAC-125G	10-slot full-size compact chassis
RACK-3000G	4U 14-slot full-size rack-mount chassis
RACK-360G	4U 14-slot full-size rack-mount chassis

SPCIE-W480

Full-size PICMG 1.3 CPU Card supports 14nm LGA1200 Intel® 10th Gen Xeon® W, Core™ i9/i7/i5/i3 processor with Intel® W480E, ECC DDR4, HDMI, DP, Dual Intel® 2.5 GbE, USB 3.2, SATA 6Gb/s, M.2 and RoHS

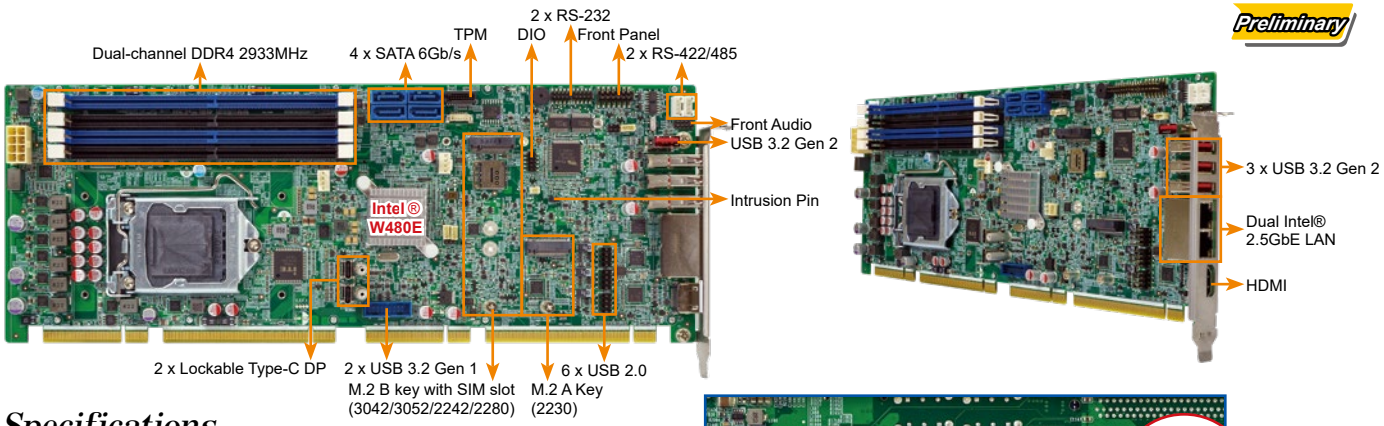

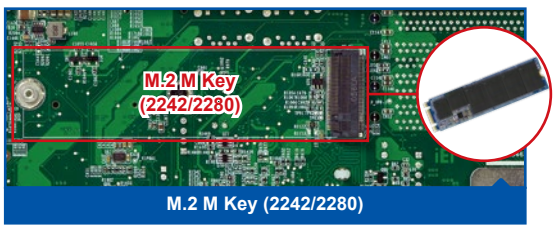


TPM 2.0 Support



Specifications

- CPU
  LGA1200 Intel® 10th generation Xeon® W, Core™ i9/i7/i5/i3 processor
- Chipset
  Intel® W480E
- BIOS
  AMI UEFI BIOS
- Memory
  Four 288-pin 2933 MHz Dual-Channel DDR4 SDRAM Unbuffered DIMMs supported up to 128GB (ECC&non-ECC support)
- Graphics Engine
  Up to Intel® UHD Graphics 630, Intel® HD Graphics Gen 9 Engines with Low power 16 execution unit, supports DX2015, OpenGL 5.X and OpenCL2.x, ES 2.0
- Display Output
  1 x HDMI (up to 4096 x 2304@30Hz)
  2 x Type-C DP (up to 4096 x 2304 @60Hz) (internal 180°)
- Ethernet
  LAN1: Intel® I225V 2.5GbE controller
  LAN2: Intel® I225V 2.5GbE controller
- External I/O Interface
  3 x USB 3.2 Gen2
- Internal I/O Interface
  1 x KB/MS (1x6 pin)
  1 x USB 3.2 Gen2 (Type A 180°)
  2 x USB 3.2 Gen1
  2 x RS-232 (2x5 pin, P=2.54)
  2 x RS-422/485 (2x5 pin, P=2.54) (RS485 support AFC)
  4 x SATA 6Gb/s (RAID 0/1/5/10 supported)
  6 x USB 2.0 (2x4 pin, P=2.54)
- SMBus: 1 x SMBus (1x4 pin)
- I²C: 1 x I²C (1x4 pin)
- Audio
  Realtek ALC888S HD Audio codec
  1 x Analog audio (2x5 pin)
- Front Panel
  1 x Front Panel (1x10 pin, Power LED, HDD LED, Speaker, Power Button, Reset Button)
- LAN LED
  2 x LAN LED (1x2 pin)
- Expansion
  1 x PCIe x16 signal via golden finger
  4 x PCIe x1 signal via golden finger
  4 x PCI signal via golden finger
  1 x M.2 A Key (2230)
  1 x M.2 M Key (2240/2280) with PCIe x4
  1 x M.2 B Key (3042/3052/2242/2280) with PCIe x2, USB 3.2 Gen1, SATA
- Digital I/O
  1 x 8-bit digital I/O (2x5 pin)
- TPM
  1 x TPM (2x10 pin)
- Fan Connector
  1 x CPU fan connector (1x4 pin)
  1 x System fan connector (1x4 pin)
- Chassis Open: 1 x Chassis intrusion (1x2 pin)
- Power Supply
  ATX/AT power supply
  Support AT/ATX mode
  ErP/EuP Compliant
- Watchdog Timer
  Software programmable support 1~255 sec. system reset
- Power Consumption
  TBD
- Operating Temperature: -20°C ~ 60°C
- Storage Temperature: -30°C ~ 70°C
- Operating Humidity: 5% ~ 95%, non-condensing
- Dimensions: 338 mm x 126 mm
- Weight: GW: 1000g / NW: 500g
- CE/FCC compliant

Features

- LGA1200 Intel® 10th Generation Xeon® W, Core™ i9/i7/i5/i3 processor
- Dual-channel DDR4 2933MHz (ECC & non-ECC support)
- Support HDMI and Dual Type-C DP
- Support M.2 A key for WLAN expansion and M.2 M key for storage

Packing List

1 x SPCIE-W480 single board computer
1 x SATA cable
1 x Mini jumper pack
1 x QIG

Ordering Information

Part No.	Description
SPCIE-W480-R10	Full-size PICMG 1.3 CPU Card supports LGA1200 Intel® 10th Generation Xeon® W, Core™ i9/i7/i5/i3 processor with Intel® W480E, ECC & non-ECC DDR4, HDMI, Dual DP, Dual Intel® 2.5GbE LAN, USB 3.2, SATA 6Gb/s, M.2, HD Audio, Intel® AMT and RoHS
19800-000049-RS	LPT flat cable, 240mm, P=2.54
19800-000075-RS	PS/2 KB/MS cable with bracket, 220mm, P=2.0
19800-003100-100-RS	Dual port USB cable with bracket, 30mm, P=2.54
19800-003100-300-RS	Dual port USB 2.0 cable with bracket, 300mm, P=2.54
19800-010500-200-RS	USB 3.2 Gen 1 (5Gb/s) cable with bracket, 450mm
19800-010500-200-RS	USB 3.0 cable 457mm with bracket
32102-000100-200-RS	SATA power cable, MOLEX 5264-4P to SATA15P
32205-000702-100-RS	RS-232 cable, 230mm, P=2.54
32205-000702-100-RS	RS-232 cable, 230mm, P=2.54
32205-003800-300-RS	RS-422/485 cable, 200mm, P=2.0
CF1156A-RS-R11	High-performance LGA1155/1156 cooler kit, 1U chassis compatible 73W
CF-1156C-RS	LGA115X cooler kit, 1U chassis compatible, 45W
CF-1156D-RS	LGA115X cooler kit, 1U chassis compatible, 65W
CF-1156E-R11	High-performance LGA115X cooler kit, 95W
TPM-IN03-R10	20-pin Infineon SPI TPM2.0 module, software mangement tool, firmware V7.63

SPCIE-C246

Full-size PICMG 1.3 CPU Card supports LGA1151 Intel® Xeon® E, Core™ i9/i7/i5/i3/ Pentium®/Celeron® CPU per Intel® C246, ECC & non-ECC DDR4, HDMI, DP, Dual Intel® PCIe GbE, USB 3.2 Gen 1 (5Gb/s), SATA 6Gb/s, M.2, HD Audio, Intel® AMT and RoHS

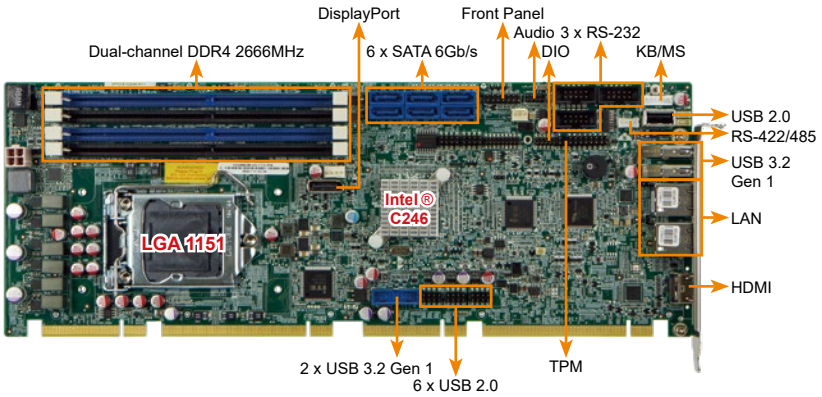

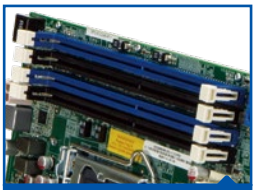

Four 288-pin DDR4 SDRAM Supported

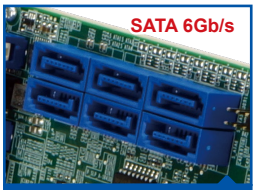

RAID 0, 1, 5, 10 function compatible with six ports of SATA 6Gb/s

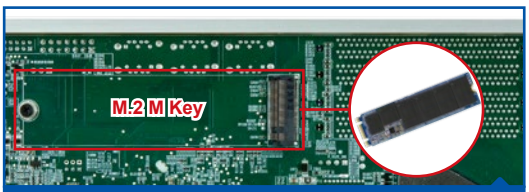

M.2 M Key



TPM 2.0 Support

Intel® Core® i9 | Dual Display | DisplayPort | HDMI | M.2 | Gigabit Ethernet Dual GbE

Specifications

- CPU
  LGA1151 socket supports Intel® Xeon® E, 8th/9th generation Core™ i9/i7/i5/i3, Pentium® or Celeron® processor
- Chipset
  Intel® C246
- Memory
  Four 288-pin 2666MHz dual-channel DDR4 SDRAM unbuffered DIMMs support up to 64GB ECC & non-ECC (C246)
- BIOS
  AMI UEFI BIOS
- Graphic Engine
  Intel® HD Graphics Gen 9 Engines with Low power 16 execution unit, supports DX2015, OpenGL 5.X and OpenCL2.x, ES 2.0
- Display Output
  Dual display supported
  1 x HDMI (up to 4096 x 2304@30Hz)
  1 x Internal DisplayPort (up to 4096 x 2304@60Hz)
- Ethernet
  LAN1: Intel® I219LM PHY
  LAN2: Intel® I211-AT PCIe controller (Co-lay I210-AT)
- External I/O Interface
  2 x USB 3.2 Gen 1 (5Gb/s) (Rear IO type A)
  1 x USB 2.0 (Type A 180°)
- Internal I/O Interface
  1 x KB/MS (1x6 pin)
  1 x RS-422/485 (1x4 pin, P=2.0)
  2 x USB 3.2 Gen 1 (5Gb/s) (2x10 pin)
  3 x RS-232 (2x5 pin, P=2.54)
  6 x SATA 6Gb/s (RAID 0/1/5/10 supported)
  6 x USB 2.0 (2x4 pin, P=2.54)
- Audio
  Support 7.1 channel HD Audio by IEI AC-KIT-888S-R10 kit
- Front Panel
  1 x Front panel (Power LED, HDD LED, Speaker, Power Button, Reset Button)
- LAN LED
  2 x LAN LED (1x2 pin)
- TPM
  1 x TPM (2x10 pin)
- SMBus
  1 x SMBus (1x4 pin)
- I²C
  1 x I²C (1x4 pin)
- Expansion
  1 x M.2 M key (2280, Gen3 PCIe x4)
  1 x PCIe x16 & 4 x PCIe x1 signal via golden finger
  4 x PCI signal via golden finger
- Watchdog Timer
  Software programmable support 1~255 sec. system reset
- Digital I/O
  8-bit digital I/O (2x5 pin)
- FAN Connector
  1 x CPU smart fan (1x4 pin)
  1 x System smart fan (1x3 pin)
- Power Supply
  AT/ATX power supply
  Support AT/ATX mode
  ErP/EuP Compliant
- Power Consumption
  5V@3.12A, 12V@6.85A, 3.3V@1.13A, 5VSB@0.15A
  (4.0 GHz Intel® Core™ i7-8700K CPU with four 16 GB 2666 MHz DDR4 memory)
- Operating Temperature
  -20°C ~ 60°C
- Operating Humidity
  5% ~ 95%, non-condensing
- Dimensions
  338 mm x 126 mm
- Weight
  GW: 1000g / NW: 500g
- CE/FCC compliant

Features

- PICMG 1.3 full-size CPU card
- LGA1151 Intel® Xeon® E, 8th/9th generation Core™ i9/i7/i5/i3, Celeron® and Pentium® processor supported
- Dual-channel DDR4 2666MHz
- Support HDMI and internal DP display
- Intel® PCIe GbE with Intel® AMT 11.0 supported
- Support M.2 M key for storage (PCIe x4)
- Supports RAID 0, 1, 5, 10 function via SATA 6Gb/s

Packing List

1 x SPCIE-C246 single board computer	1 x SATA cable
1 x Mini jumper pack	1 x QIG (Quick Installation Guide)

Ordering Information

Part No.	Description
SPCIE-C246-R11	Full-size PICMG 1.3 CPU Card supports LGA1151 Intel® Xeon® E, Core™ i9/i7/i5/i3/Pentium®/Celeron® CPU per Intel® C246, ECC & non-ECC DDR4, HDMI, DP, Dual Intel® PCIe GbE, M.2, USB 3.2 Gen 1 (5Gb/s), SATA 6Gb/s, HD Audio, iAMT and RoHS
19800-000075-RS	PS/2 KB/MS cable with bracket, 220mm, P=2.0
19800-003100-300-RS	Dual port USB 2.0 cable with bracket, 300mm, P=2.54
19800-010500-200-RS	USB 3.2 Gen 1 (5Gb/s) cable with bracket, 450mm
32102-000100-200-RS	SATA power cable, MOLEX 5264-4P to SATA15P
32205-000702-100-RS	RS-232 cable, 230mm, P=2.54
32205-003800-300-RS	RS-422/485 cable, 200mm, P=2.0
AC-KIT-892HD-R10	7.1 channel HD Audio kit with Realtek ALC892 support dual audio streams
CF-1150SA-R10	Special cooler kit for LGA1150, High-performance compatible, 95W
CF-1150SB-R11	Special cooler kit for LGA1150, High-performance compatible, 65W
CF-1150SC-R20	Special cooler kit for LGA1150, 1U chassis compatible, 65W
CF-1150SE-R11	Special cooler kit for LGA1150, high-performance compatible, 95W
CF-1150SF-R10	Special cooler kit for LGA1150, 1U chassis compatible, 54W
SAIDE-KIT01-R10	SATA to IDE/CF Converter board

SPCIE-C236

Full-size PICMG 1.3 CPU Card supports LGA 1151 Intel® Xeon® E3, Core™ i3/Pentium®/ Celeron® CPU per Intel® C236, ECC & non-ECC DDR4, VGA/iDP, Dual Intel® PCIe GbE, mSATA, PCIe Mini, USB 3.2 Gen 1 (5Gb/s), SATA 6Gb/s, HD Audio, Intel® AMT, iRIS-2400 and RoHS

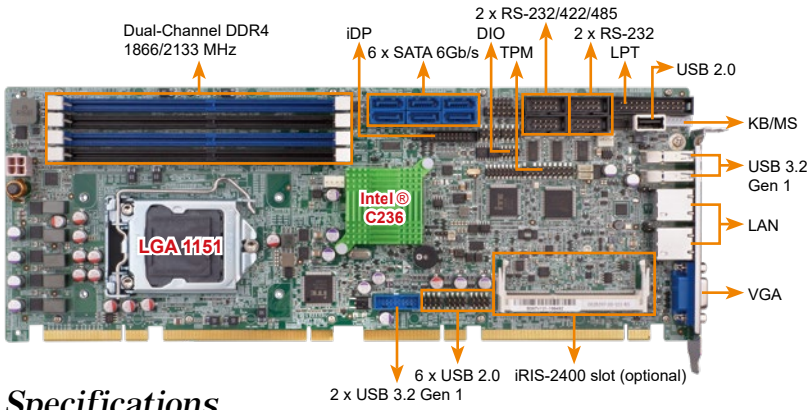

PCIe Mini & mSATA colay

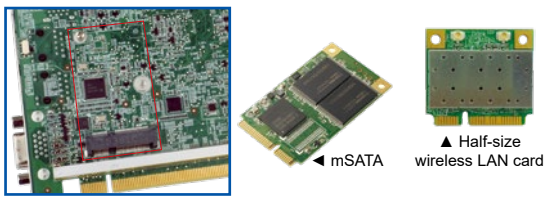

◀ mSATA

▲ Half-size wireless LAN card

PCIe Mini interface provides SATA, PCIe x1 and USB signals to support full-size or half-size devices, such as mSATA, PCIe devices, and wireless LAN cards.



TPM 2.0 Support

Intel® AMT 11.0

DDR4 2133 | USB 3.2 | SATA 6Gb/s | Dual GbE | mSATA | iDP

Specifications

- CPU
  LGA 1151 socket supports Intel® Xeon® E3 v5/v6, 6th/7th generation Core™ i3, Pentium® or Celeron® processor
- Chipset
  Intel® C236
- Memory
  Four 288-pin 1866/2133 MHz dual-channel ECC & non-ECC unbuffered DDR4 DIMMs support up to 64GB
- BIOS
  UEFI BIOS
- Graphics Engine
  Intel® HD Graphics Gen 9 supports DX11/12, OpenCL 2.x and OpenGL 4.3/4.4
  Decode/Encode for HEVC, VP8, VP9, VDENC
- Display Output
  Dual independent display
  1 x VGA (up to 1920x1200@60 Hz)
  1 x iDP interface for HDMI, LVDS, VGA, DVI and DisplayPort (up to 3840x2160@60 Hz)
- Ethernet
  LAN1: Intel® I219LM Clarkville-V with Intel® AMT 11.0 supported
  LAN2: Intel® I210 PCIe controller
- External I/O Interface
  2 x USB 3.2 Gen 1 (5Gb/s)
- Internal I/O Interface
  1 x KB/MS (1x6 pin)
  1 x LPT (2x13 pin)
  1 x mSATA (SATA & USB signal)
  1 x USB 2.0 (180° Type-A)
  2 x RS-232 (2x5pin, P=2.54)
  2 x RS-232/422/485 (2x5 pin, P=2.54)
  2 x USB 3.2 Gen 1 (5Gb/s) (2x10 pin)
  6 x SATA 6Gb/s (RAID 0/1/5/10 supported)
  6 x USB 2.0 (2x4 pin, P=2.54)
- Front Panel
  1 x Front Panel (1x10 pin, power LED, HDD LED, speaker, power button, reset button)
- LAN LED
  2 x LAN LED (1x2 pin)
- Audio
  Support 7.1 channel HD Audio by IEI AC-KIT-888S-R10 kit
- TPM
  1 x TPM (2x10 pin)
- SMBus
  1 x SMBus (1x4 pin)
- I²C
  1 x I²C (1x4 pin)
- iRIS Remote Management Module
  1 x iRIS-2400 slot (optional)
- Expansion
  16-lane PCIe link from CPU via golden finger:
  Supports one PCIe x16, or two PCIe x8, or one PCIe x8 + two PCIe x4 on the backplane (configured via BIOS)
  4-lane PCIe link from PCH via golden finger:
  Supports four PCIe x1 slots or one PCIe x4 slot on the backplane (configured via BIOS switch)
  1 x Full/Half-size PCIe Mini card slot (supports mSATA)
- Watchdog Timer: Software programmable, supports 1~255 sec. system reset
- Digital I/O: 8-bit digital I/O (2x5 pin)
- Fan Connector
  1 x CPU smart fan (1x4 pin)
  1 x System smart fan (1x3 pin)
- Power Supply
  5V/12V, AT/ATX support
- Power Consumption
  5V@3.22A, 12V@6.81A, 3.3V@1.21A, 5VSB@0.18A (Intel® Xeon® E3-1275 v5 3.60 GHz CPU with 64GB (16GBx4) 2133 MHz DDR4 memory)
- Operating Temperature
  -20°C ~ 60°C
- Operating Humidity
  5% ~ 95%, non-condensing
- Dimensions
  338 mm x 126 mm
- Weight
  GW: 1000g / NW: 420g
- CE/FCC compliant

Features

- PICMG 1.3 full-size CPU Card
- LGA 1151 Intel® Xeon® E3 v5/v6, 6th/7th generation Core™ i3, Pentium® or Celeron® processor supported
- Four 288-pin 1866/2133MHz DDR4 ECC & non-ECC unbuffered DIMM
- Supports dual independent display by VGA & internal DP pin header
- Supports PCIe Mini device & mSATA via PCIe Mini card slot
- Intel® PCIe GbE with Intel® AMT 11.0 supported
- Supports RAID 0, 1, 5, 10 function via SATA 6Gb/s
- TPM 1.2 & 2.0 hardware security function supported by TPM module

Packing List

1 x SPCIE-C236 single board computer	1 x Mini jumper pack
1 x SATA cable	1 x QIG

Ordering Information

Part No.	Description
SPCIE-C236-R10	Full-size PICMG 1.3 CPU Card supports LGA 1151 Intel® Xeon® E3, Core™ i3/Pentium®/Celeron® CPU per Intel® C236, ECC & non-ECC DDR4, Dual Intel® PCIe GbE, VGA/iDP, VGA/ iDP, USB 3.2 Gen 1 (5Gb/s), SATA 6Gb/s, PCIe Mini, HD Audio, Intel® AMT, and RoHS
SPCIE-C236-i2-R10**	Full-size PICMG 1.3 CPU Card supports LGA 1151 Intel® Xeon® E3, Core™ i3/Pentium®/Celeron® CPU per Intel® C236, ECC & non-ECC DDR4, Dual Intel® PCIe GbE, VGA/iDP, VGA/ iDP, USB 3.2 Gen 1 (5Gb/s), SATA 6Gb/s, PCIe Mini, HD Audio, Intel® AMT, iRIS-2400 and RoHS
19800-000049-RS	LPT flat cable, 240mm, P=2.54
19800-000075-RS	PS/2 KB/MS cable with bracket, 220mm, P=2.0
19800-003100-300-RS	Dual port USB 2.0 cable with bracket, 300mm, P=2.54
19800-010500-200-RS	USB 3.2 Gen 1 (5Gb/s) cable with bracket, 450mm
32102-000100-200-RS	SATA power cable, MOLEX 5264-4P to SATA15P
32205-000702-100-RS	RS-232 cable, 230mm, P=2.54
32205-003800-300-RS	RS-422/485 cable, 200mm, P=2.0
AC-KIT-892HD-R10	7.1 channel HD Audio kit with Realtek ALC892 support dual audio streams
CF-1150SA-R10	Special cooler kit for LGA1150, high-performance compatible, 95W
CF-1150SB-R11	Special cooler kit for LGA1150, high-performance compatible, 65W
CF-1150SC-R20	Special cooler kit for LGA1150, 1U chassis compatible, 65W
CF-1150SE-R11	Special cooler kit for LGA1150, high-performance compatible, 95W
CF-1150SF-R10	Special cooler kit for LGA1150, 1U chassis compatible, 54W
DP-DP-R10	DisplayPort to DisplayPort converter board (for IEI iDP connector)
DP-DVI-R10	DisplayPort to DVI-D converter board (for IEI iDP connector)
DP-HDMI-R10	DisplayPort to HDMI converter board (for IEI iDP connector)
DP-LVDS-R10	DisplayPort to LVDS converter board (for IEI iDP connector)
DP-VGA-R10	DisplayPort to VGA converter board (for IEI iDP connector)
SAIDE-KIT01-R10	SATA to IDE/CF converter board

**By order production, MOQ: 100

SPCIE-C2260-i2

Full-size PICMG 1.3 CPU Card supports LGA 1150 Intel® Xeon® E3, Core™ i3, Pentium® and Celeron® with Intel® C226, DDR3, VGA, iDP, Dual Intel® PCIe GbE, SATA 6Gb/s, mSATA, PCIe Mini, RS-232, HD Audio, iRIS-2400 and RoHS

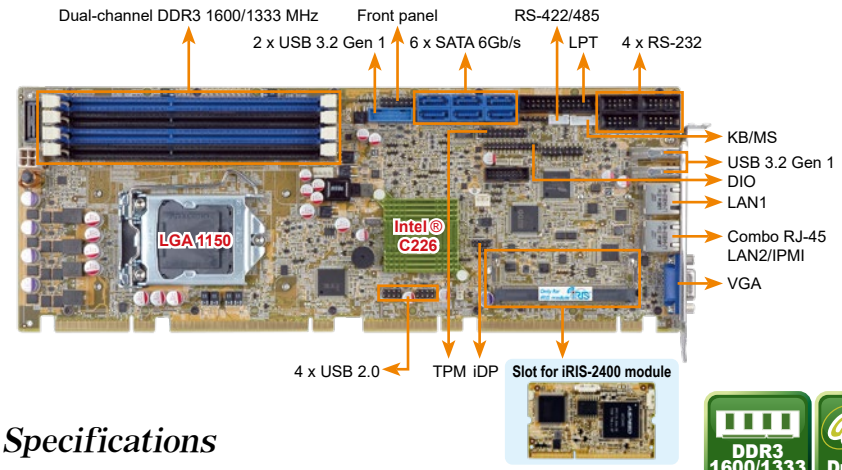

PICMG 1.3 Server Grade Solution

IPMI 2.0 Compliant

TPM 2.0 Support

DDR3 1600/1333 | Dual GbE | USB 3.2 | SATA 6Gb/s | mSATA | iDP

Specifications

- CPU
  LGA 1150 Intel® Xeon® E3, Core™ i3, Pentium® or Celeron® processor supported
- Chipset
  Intel® C226
- Memory
  Four 240-pin 1600/1333 MHz dual-channel DDR3 & DDR3L SDRAM ECC and non-ECC unbuffered DIMMs support up to 32 GB
- BIOS
  UEFI BIOS
- Graphics Engine
  Intel® HD Graphics Gen 7.5 supports DX11.1 and OpenCL 1.2, OpenGL 3.2
  Full MPEG2, VC1, AVC Decode
- Display Output
  1 x VGA (up to 1920x1200@60 Hz)
  1 x iDP interface for HDMI, LVDS, VGA, DVI, DP (up to 3840x2160@60 Hz)
- Ethernet
  LAN1: Intel® I217LM with Intel® AMT 9.0 support
  LAN2: Intel® I210-AT PCIe controller with NCSI support
- Audio
  Support 7.1 channel HD Audio by IEI AC-KIT-888S-R10 kit
- External I/O Interface
  2 x USB 3.2 Gen 1 (5Gb/s)
- Internal I/O Interface
  1 x KB/MS (1x6 pin)
  1 x LPT (2x13 pin)
  1 x mSATA
  1 x RS-422/485 (1x4 pin, P=2.0)
  2 x USB 3.2 Gen 1 (5Gb/s) (2x10 pin)
  4 x USB 2.0 (Golden finger)
  4 x USB 2.0 (2x4 pin, P=2.54)
  4 x RS-232 (2x5pin, P=2.54)
  6 x SATA 6Gb/s (RAID 0/1/5/10 supported)
- LAN LED
  2 x LAN LED (1x2 pin)
- TPM
  1 x TPM (2x10 pin)
- SMBus
  1 x SMBus (1x4 pin)
- I²C
  1 x I²C (1x4 pin)
- Infrared Interface
  1 x Infrared Interface (1x5 pin)
- Digital I/O
  8-bit digital I/O (2x5 pin)
- Front Panel
  1 x Front panel (2x7 pin, power LED, HDD LED, speaker, power button, reset button)
- iRIS Remote Management Module
  1 x iRIS-2400 slot
- Expansion
  PCIe signal and PCI signal via golden finger
  1 x Full-size PCIe Mini card slot (colay mSATA)
- Watchdog Timer
  Software programmable, supports 1~255 sec. system reset
- Fan Connector
  1 x CPU smart fan (1x4 pin)
  1 x System smart fan (1x3 pin)
- Power Supply
  5V/12V, AT/ATX support
- Power Consumption
  5V@3.55A, 12V@0.37A, Vcore_12V@7.61A, 3.3V@1.55A, 5VSB@0.13A (Intel® E3-1240 v3 3.4GHz CPU with 16 GB (four 4 GB) 1333 MHz DDR3 memory)
- Operating Temperature: -20°C ~ 60°C
- Storage Temperature: -30°C ~ 70°C
- Operating Humidity: 5% ~ 95%, non-condensing
- Dimensions: 338 mm x 126 mm
- Weight: GW: 1200g / NW: 420g
- CE/FCC compliant

Features

- PICMG 1.3 full-size server grade solution
- LGA 1150 Intel® Xeon® E3, Core™ i3, Pentium® or Celeron® processor supported
- Four 240-pin 1600/1333 MHz dual-channel DDR3 DIMMs support up to 32 GB
- Supports dual independent display by VGA and iDP interfaces
- Supports PCIe Mini devices and mSATA via PCIe Mini socket
- Supports RAID function via SATA 6Gb/s
- Stiffener bars
- IEI jumper-less function
- Supports IPMI 2.0 via iRIS-2400 module

Packing List

1 x SPCIE-C2260-i2 single board computer
1 x Dual RS-232 cable
1 x USB 2.0 cable
2 x SATA cable
1 x QIG

Ordering Information

Part No.	Description
SPCIE-C2260-i2-R10	Full-size PICMG 1.3 CPU card supports LGA 1150 Intel® Xeon® E3, Core™ i3, Pentium® and Celeron® with Intel® C226, DDR3, VGA, iDP, Dual Intel® PCIe GbE, SATA 6Gb/s, mSATA, RS-232, PCIe Mini, HD Audio, iRIS-2400 and RoHS
iRIS-2400-R10	IPMI 2.0 adapter card with AST2400 BMC chip for DDR3 SO-DIMM socket interface
19800-000049-RS	LPT flat cable, 240mm, P=2.54
19800-000075-RS	PS/2 KB/MS cable with bracket, 220mm, P=2.0
19800-010500-200-RS	USB 3.2 Gen 1 (5Gb/s) cable with bracket, 450mm
32102-000100-200-RS	SATA power cable, MOLEX 5264-4P to SATA15P
32205-003800-300-RS	RS-422/485 cable, 200mm, P=2.0
AC-KIT-892HD-R10	7.1-channel HD Audio kit with Realtek ALC892 supports dual audio streams
CF-1150SB-R11	Special cooler kit for LGA 1150, high-performance compatible, 65W
CF-1150SC-R20	Special cooler kit for LGA1150, 1U chassis compatible, 65W
CF-1150SE-R11	Special cooler kit for LGA1150, high-performance compatible, 95W
CF-1150SF-R10	Special cooler kit for LGA1150, 1U chassis compatible, 54W
DP-DP-R10	DisplayPort to DisplayPort converter board (for IEI iDP connector)
DP-DVI-R10	DisplayPort to DVI-D converter board (for IEI iDP connector)
DP-HDMI-R10	DisplayPort to HDMI converter board (for IEI iDP connector)
DP-LVDS-R10	DisplayPort to LVDS converter board (for IEI iDP connector)
DP-VGA-R10	DisplayPort to VGA converter board (for IEI iDP connector)
TPM-IN01-R20	20-pin Infineon TPM module, software management tool, firmware v3.17

PICMG 1.3 Backplane

Selection Guide

PAC series wall-mount chassis 4U rack-mount chassis

Backplane		SPE-6S	SPE-9S	SPXE-11S	SPXE-14S
Total	Slot	6	7	11	14
PCIe	x16				
	x8		1 (x16 connector) (Gen 3.0)		1 (x16 connector) (Gen 3.0)
	x4	5 (Gen 3.0)	3 (Gen 3.0)	6 (x16 connector) (Gen 3.0)	
	x1				12 (x4 connector) (Gen 3.0)
	PCI-X				
	PCI		3	4	
PSU Type		24+4-pin ATX	24+4-pin ATX	24+8-pin ATX	24+8-pin ATX
Chassis Option		PAC-106G PAC-1000G	PAC-125G	RACK-305G RACK-360G RACK-3000G	RACK-305G RACK-360G RACK-3000G

IEI Server Grade Backplane Solution

Server grade backplane accommodates PCIe x8 and multiple PCIe x4 add-on cards. It is specially designed for intensive data transfer applications such as server data storage and any application that requires more than one PCIe x4 or four PCIe x1 cards. Given the multiple PCIe x4 and x1 support, it provides a more cost effective solution for end-users by reducing the number of systems required.

System Solution for options

Backplane	Total	PCIe						PSU Type	Chassis Option
	Slot	x16	x8	x4	x1	PCI-X	PCI		
SPE-6S	6	-		5	-	-	-	24+4-pin ATX	PAC-106G PAC-1000G
SPE-9S	7	-	1 (x16 connector)	3			3	24+4-pin ATX	PAC-125G
SPXE-11S	11	-	-	6 (x16 connector)	-	-	4	24+8-pin ATX	RACK-305G RACK-360G RACK-3000G
SPXE-14S	14	-	1 (x16 connector)	-	12 (x4 connector)	-	-	24+8-pin ATX	RACK-305G RACK-360G RACK-3000G

Server Grade Backplane

Example	Corresponding Model
EX2: 1 x8 & 3 x4 slots SHB x4 x8 x4 x4	SPE-9S
EX3: 5 x4 slots SHB x4 x4 x4 x4 x4	SPE-6S

SPE-6S-R10

Server Grade

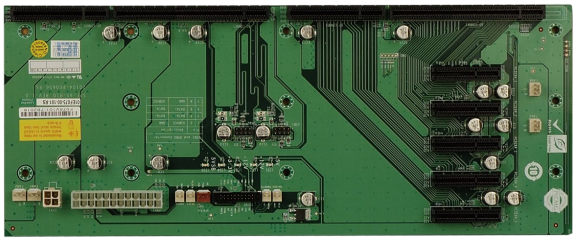

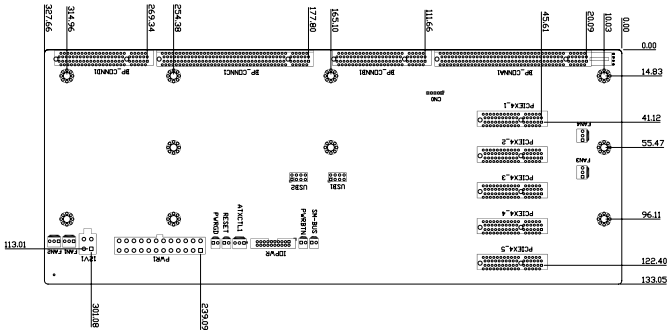

Ordering Information

SPE-6S-R10	6-slot PICMG 1.3 backplane with five PCIe x4 slots (PCIe Gen 3.0)
PAC-106G	6-slot full-size compact chassis
PAC-1000G	6-slot full-size compact chassis

Note: PCIEX4_3 can not work with SPCIE-C2060, SPCIE-C2160, SPCIE-C22260, SPCIE-C236 & HPCIE-C236.

SPE-9S-R11

Server Grade

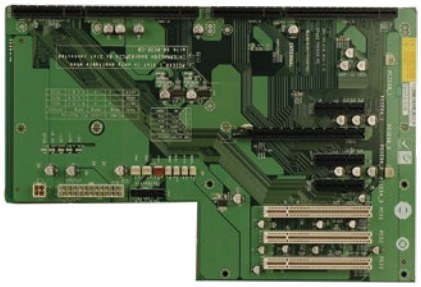

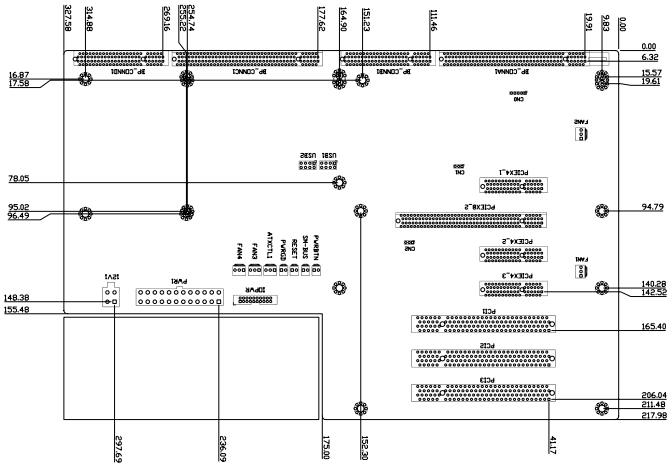

Ordering Information	
SPE-9S-R11	7-slot PICMG 1.3 backplane with one PCIe x16 slot (x8 signal), three PCIe x4 slots and three PCI slots (PCIe Gen 3.0)
PAC-125G	10-slot full-size compact chassis

SPXE-11S-R10

Server Grade



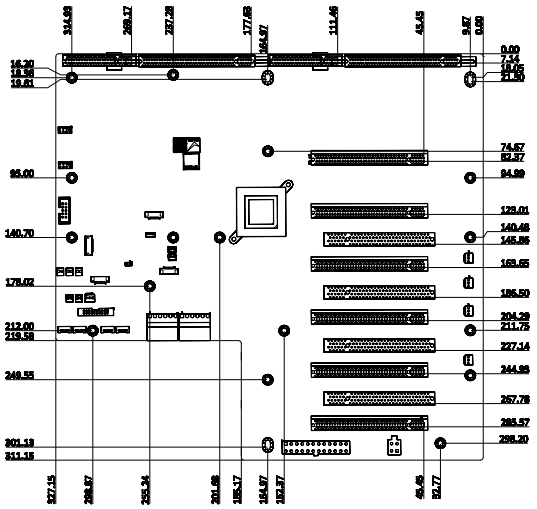

Ordering Information	
SPXE-11S-R10	11-Slot PICMG 1.3 PCIe to PCIe Switch (PLX PEX8724) Backplane, 6 PCIe Gen 3.0 x4 w/ x16 slot,4 PCI, RoHS (PCIe Gen 3.0)
RACK-305G	4U 14-slot full-size rack-mount chassis
RACK-360G	4U 14-slot full-size rack-mount chassis
RACK-3000G	4U 14-slot full-size rack-mount chassis

SPXE-14S-R20

Server Grade

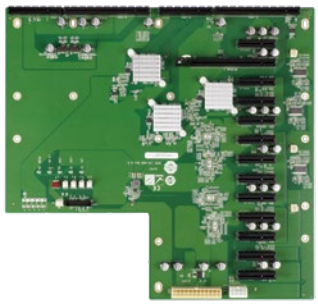

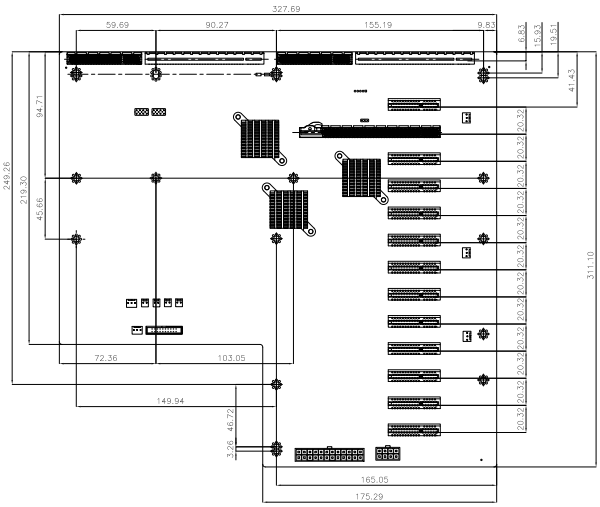

Ordering Information	
SPXE-14S-R20	14-slot PICMG 1.3 backplane with one PCIe x16 slot (x8 signal) and twelve PCIe x4 slots (x1 signal) (PCIe Gen 3.0)
RACK-305G	4U 14-slot full-size rack-mount chassis
RACK-360G	4U 14-slot full-size rack-mount chassis
RACK-3000G	4U 14-slot full-size rack-mount chassis

PCIE-Q470

Full-size PICMG 1.3 CPU Card supports 14nm LGA1200 Intel® 10th Gen Core™ i9/i7/i5/i3, Celeron® and Pentium® processor with Intel® Q470E, DDR4, HDMI, DP, Dual Intel® 2.5 GbE, USB 3.2, SATA 6Gb/s, M.2 and RoHS

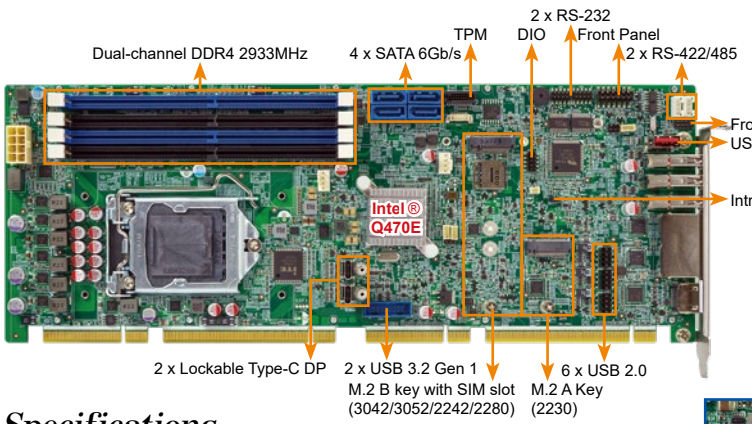

Preliminary

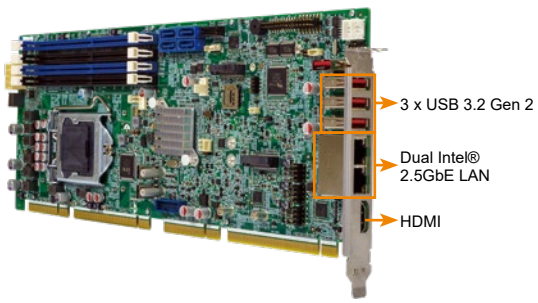



M.2 M Key (2242/2280)



TPM 2.0 Support



Specifications

- CPU
  LGA1200 socket supports 10th generation Intel® Core™ i9/i7/i5/i3, Celeron® and Pentium® processor
- Chipset
  Intel® Q470E
- BIOS
  AMI UEFI BIOS
- Memory
  Four 288-pin 2933 MHz Dual-Channel DDR4 SDRAM Unbuffered DIMMs supported up to 128GB
- Graphics Engine
  Up to Intel® UHD Graphics 630, Intel® HD Graphics Gen 9 Engines with Low power 16 execution unit, supports DX2015, OpenGL 5.X and OpenCL2.x, ES 2.0
- Display Output
  1 x HDMI (up to 4096 x 2304@30Hz)
  2 x Type-C DP (up to 4096 x 2304 @60Hz) (internal 180°)
- Ethernet
  LAN1: Intel® I225V 2.5GbE controller
  LAN2: Intel® I225V 2.5GbE controller
- External I/O Interface
  3 x USB 3.2 Gen2
- Internal I/O Interface
  1 x KB/MS (1x6 pin)
  1 x USB 3.2 Gen2 (Type A 180°)
  2 x USB 3.2 Gen1
  2 x 422/485 (2x5 pin, P=2.54) (RS485 support AFC)
  2 x RS-232 (2x5 pin, P=2.54)
  4 x SATA 6Gb/s (RAID 0/1/5/10 supported)
  6 x USB 2.0 (2x4 pin, P=2.54)
- SMBus
  1 x SMBus (1x4 pin)
- I²C
  1 x I²C (1x4 pin)
- Audio
  Realtek ALC888S HD Audio codec
  1 x Analog audio (2x5 pin)
- Front Panel
  1 x Front Panel (1x10 pin, Power LED, HDD LED, Speaker, Power Button, Reset Button)
- LAN LED
  2 x LAN LED (1x2 pin)
- Expansion
  1 x PCIe x16 signal via golden finger
  4 x PCIe x1 signal via golden finger
  4 x PCI signal via golden finger
  1 x M.2 A Key (2230)
  1 x M.2 M Key (2240/2280) with PCIe x4
  1 x M.2 B Key (3042/3052/2242/2280) with PCIe x2, USB3.2 Gen1, SATA
- Digital I/O
  1 x 8-bit digital I/O (2x5 pin)
- TPM
  1 x TPM (2x10 pin)
- Fan Connector
  1 x CPU fan connector (1x4 pin)
  1 x System fan connector (1x4 pin)
- Chassis Open
  1 x Chassis intrusion (1x2 pin)
- Power Supply
  ATX/AT power supply
  Support AT/ATX mode
  ErP/EuP Compliant
- Watchdog Timer: Software programmable support 1~255 sec. system reset
- Power Consumption
  TBD
- Operating Temperature: -20°C ~ 60°C
- Storage Temperature: -30°C ~ 70°C
- Operating Humidity: 5% ~ 95%, non-condensing
- Dimensions: 338 mm x 126 mm
- Weight: GW: 1000g / NW: 500g
- CE/FCC compliant

Features

- LGA1200 Intel® 10th Generation Core™ i9/i7/i5/i3, Celeron® and Pentium® processor
- Dual-channel DDR4 2933MHz
- Support HDMI and Type-C DP
- Support M.2 A key for WLAN expansion and M.2 M key for storage

Packing List

1 x PCIE-Q470 single board computer
1 x SATA cable
1 x Mini jumper pack
1 x QIG

Ordering Information

Part No.	Description
PCIE-Q470-R10	Full-size PICMG 1.3 CPU Card supports LGA1200 Intel® 10th Generation Core™ i9/i7/i5/i3, Celeron® and Pentium® processor with Intel® Q470E, DDR4, HDMI, Dual DP, Dual Intel® 2.5GbE LAN, USB 3.2, SATA 6Gb/s, M.2, HD Audio, Intel® AMT and RoHS
19800-000049-RS	LPT flat cable, 240mm, P=2.54
19800-000075-RS	PS/2 KB/MS cable with bracket, 220mm, P=2.0
19800-003100-100-RS	Dual port USB cable with bracket, 30mm, P=2.54
19800-003100-300-RS	Dual port USB 2.0 cable with bracket, 300mm, P=2.54
19800-010500-200-RS	USB 3.2 Gen 1 (5Gb/s) cable with bracket, 450mm
19800-010500-200-RS	USB 3.0 cable 457mm with bracket
32102-000100-200-RS	SATA power cable, MOLEX 5264-4P to SATA15P
32205-000702-100-RS	RS-232 cable, 230mm, P=2.54
32205-000702-100-RS	RS-232 cable, 230mm, P=2.54
32205-003800-300-RS	RS-422/485 cable, 200mm, P=2.0
CF1156A-RS-R11	High-performance LGA1155/1156 cooler kit, 1U chassis compatible 73W
CF-1156C-RS	LGA115X cooler kit, 1U chassis compatible, 45W
CF-1156D-RS	LGA115X cooler kit, 1U chassis compatible, 65W
CF-1156E-R11	High-performance LGA115X cooler kit, 95W
TPM-IN03-R10	20-pin Infineon SPI TPM2.0 module, software mangement tool, firmware V7.63

PCIE-Q370

Full-size PICMG 1.3 CPU Card supports LGA1151 Intel® Core™ i9/i7/i5/i3/Pentium®/ Celeron® CPU per Intel® Q370, DDR4, VGA, Dual Intel® PCIe GbE, SATA 6Gb/s, USB 3.2 Gen 1 (5Gb/s), M.2, HD Audio, Intel® AMT and RoHS

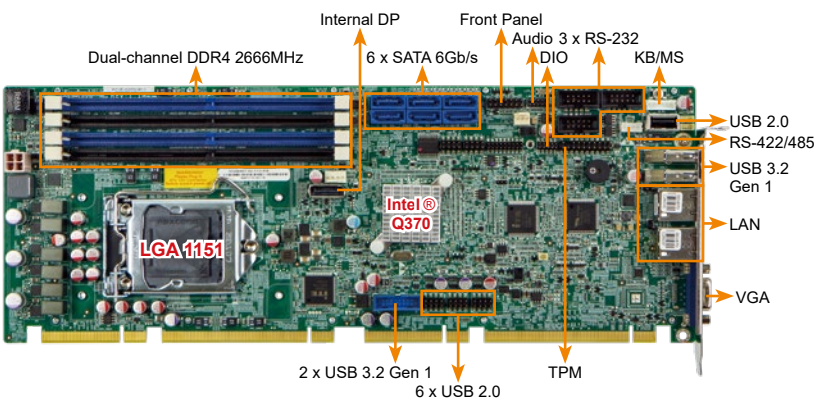

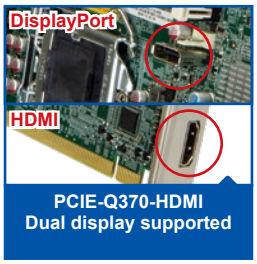

PCIE-Q370-HDMI
Dual display supported

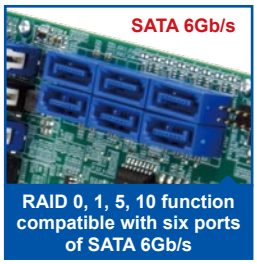

RAID 0, 1, 5, 10 function compatible with six ports of SATA 6Gb/s

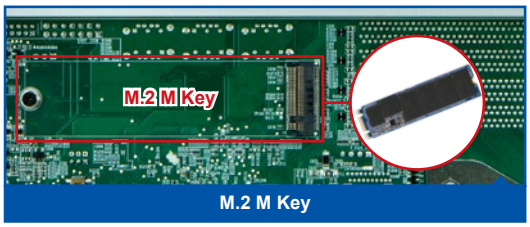

M.2 M Key

Specifications

- CPU
  LGA1151 socket supports 8th/9th generation Intel® Core™ i9/i7/i5/i3, Pentium® or Celeron® processor
- Chipset
  Intel® Q370
- Memory
  Four 288-pin 2666MHz dual-channel DDR4 SDRAM unbuffered DIMMs support up to 64GB
- BIOS
  AMI UEFI BIOS
- Graphic Engine
  Intel® HD Graphics Gen 9 Engines with Low power 16 execution unit, supports DX2015, OpenGL 5.X and OpenCL2.x, ES 2.0
- Display Output
  » PCIE-Q370-R11
  Dual display supported
  1 x VGA (up to 1920 x 1080@60Hz) 1 x Internal DP (up to 4096 x 2304@60Hz)
  » PCIE-Q370-HDMI-R11**
  Dual display supported
  1 x HDMI (up to 4096 x 2304@30Hz) 1 x Internal DP (up to 4096 x 2304@60Hz)
- Ethernet
  LAN1: Intel® I219LM PHY
  LAN2: Intel® I211-AT PCIe controller (Co-lay I210-AT)
- External I/O Interface
  2 x USB 3.2 Gen 1 (5Gb/s) (Rear IO type A)
  1 x USB 2.0 (Type A 180°)
- Internal I/O Interface
  1 x KB/MS (1x6 pin) 3 x RS-232 (2x5 pin, P=2.54)
  1 x RS-422/485 (1x4 pin, P=2.0) 6 x SATA 6Gb/s (RAID 0/1/5/10 supported)
  2 x USB 3.2 Gen 1 (5Gb/s) (2x10 pin) 6 x USB 2.0 (2x4 pin, P=2.54)
- Audio
  Support 7.1 channel HD Audio by IEI AC-KIT-888S-R10 kit
- Front Panel
  1 x Front panel (Power LED, HDD LED, Speaker, Power Button, Reset Button)
- LAN LED
  2 x LAN LED (1x2 pin)
- TPM
  1 x TPM (2x10 pin)
- SMBus
  1 x SMBus (1x4 pin)
- I²C
  1 x I²C (1x4 pin)
- Expansion
  1 x M.2 M key (2280, Gen3 PCIe x4)
  1 x PCIe x16 & 4 x PCIe x1 signal via golden finger
  4 x PCI signal via golden finger
- Watchdog Timer
  Software programmable support 1~255 sec. system reset
- Digital I/O
  8-bit digital I/O (2x5 pin)
- Fan Connector
  1 x CPU smart fan (1x4 pin)
  1 x System smart fan (1x3 pin)
- Power Supply
  AT/ATX power supply
  Support AT/ATX mode
  ErP/EuP Compliant
- Power Consumption
  5V@3.12A, 12V@6.85A, 3.3V@1.13A, 5VSB@0.15A
  (4.0 GHz Intel® Core™ i7-8700K CPU with four 16 GB 2666 MHz DDR4 memory)
- Operating Temperature
  -20°C ~ 60°C
- Operating Humidity
  5% ~ 95%, non-condensing
- Diemension: 338 mm x 126 mm
- Weight: GW: 1000g / NW: 500g
- CE/FCC compliant



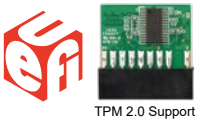
TPM 2.0 Support

Features

- PICMG 1.3 full-size CPU card
- LGA1151 Intel® 8th/9th Generation Core™ i9/i7/i5/i3, Celeron® and Pentium® processor supported
- Dual-channel DDR4 2666MHz
- Support VGA/HDMI and internal DP display
- Intel® PCIe GbE with Intel® AMT 11.0 supported
- Support M.2 M key for storage (PCIe x4)
- Supports RAID 0, 1, 5, 10 function via SATA 6Gb/s

Packing List

1 x PCIE-Q370 single board computer	1 x Mini jumper pack
1 x SATA cable	1 x QIG (Quick Installation Guide)

Ordering Information

Part No.	Description
PCIE-Q370-R11	Full-size PICMG 1.3 CPU Card supports LGA1151 Intel® Core™ i9/i7/i5/i3/Pentium®/Celeron® CPU per Intel® Q370, DDR4, VGA, DP, Dual Intel® PCIe GbE, USB 3.2 Gen 1, SATA 6Gb/s, M.2, HD Audio, iAMT and RoHS
PCIE-Q370-HDMI-R11**	Full-size PICMG 1.3 CPU Card supports LGA1151 Intel® Core™ i9/i7/i5/i3/Pentium®/Celeron® CPU per Intel® Q370, DDR4, HDMI, DP, Dual Intel® PCIe GbE, USB 3.2 Gen 1, SATA 6Gb/s, M.2, HD Audio, iAMT and RoHS
19800-000075-RS	PS/2 KB/MS cable with bracket, 220mm, P=2.0
19800-000100-100-RS	Cable module, USB cable, 6, 300mm, 28AWG, (A) USB A type female*4, (B) Dupont 2X4P P=2.54 female*2, ONE PCS PKG w/ label, with bracket, RoHS
19800-003100-300-RS	Dual port USB 2.0 cable with bracket, 300mm, P=2.54
19800-010500-200-RS	Cable module, USB 3.0 internal cable+bracket, 3, 450mm, 30AWG, (A) USB 3.0 20pin P=2.0, (B) USB 9pin A type female*2, bracket+M3 screw*2, lotes, RoHS
19800-010500-200-RS	USB 3.2 Gen 1 (5Gb/s) cable with bracket, 450mm
32102-000100-200-RS	SATA power cable, MOLEX 5264-4P to SATA15P
32205-000702-100-RS	RS-232 cable, 230mm, P=2.54
32205-003800-300-RS	RS-422/485 cable, 200mm, P=2.0
AC-KIT-892HD-R10	7.1 channel HD Audio kit with Realtek ALC892 support dual audio streams
CB-USB02-RS	Dual ports USB cable with bracket
CF-1150SA-R10	Special cooler kit for LGA1150, High-performance compatible, 95W
CF-1150SB-R11	Special cooler kit for LGA1150, High-performance compatible, 65W
CF-1150SC-R20	Special cooler kit for LGA1150, 1U chassis compatible, 65W
CF-1150SE-R11	Special cooler kit for LGA1150, high-performance compatible, 95W
CF-1150SF-R10	Special cooler kit for LGA1150, 1U chassis compatible, 54W
SAIDE-KIT01-R10	SATA to IDE/CF Converter board

**By order production, MOQ: 100

PCIE-Q170

Full-size PICMG 1.3 CPU Card supports LGA1151 Intel® Core™ i7/i5/i3/Pentium®/ Celeron® CPU per Intel® Q170, DDR4, VGA/iDP, Dual Intel® PCIe GbE, PCIe Mini, mSATA, USB 3.2 Gen 1 (5Gb/s), SATA 6Gb/s, HD Audio, Intel® AMT, iRIS-2400 and RoHS

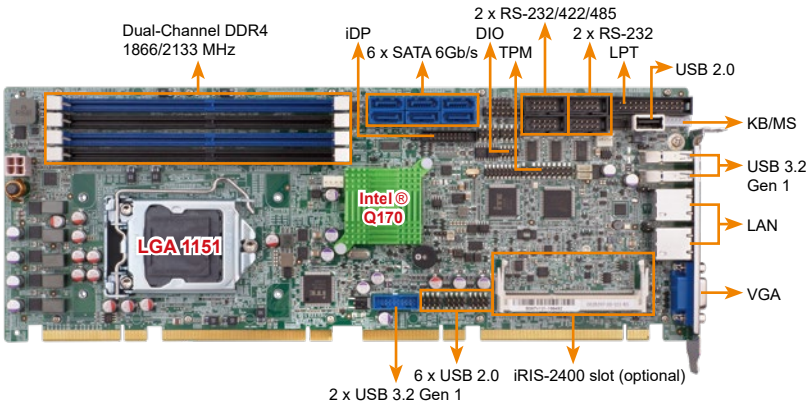

Four 288-pin DDR4 SDRAM Supported





RAID 0, 1, 5, 10 function compatible with six ports of SATA 6Gb/s







TPM 2.0 Support





Specifications

- CPU
  LGA 1151 socket supports Intel® 6th/7th generation Core™ i7/i5/i3, Pentium® or Celeron® processor
- Chipset
  Intel® Q170
- Memory
  Four 288-pin 1866/2133 MHz dual-channel unbuffered DDR4 DIMMs support up to 64GB
- BIOS
  UEFI BIOS
- Graphic Engine
  Intel® HD Graphics Gen 9 supports DX11/12, OpenCL 2.x and OpenGL 4.3/4.4
  Decode/Encode for HEVC, VP8, VP9, VDENC
- Display Output
  Dual independent display
  1 x VGA (up to 1920x1200@60 Hz)
  1 x iDP interface for HDMI, LVDS, VGA, DVI and DisplayPort (up to 3840x2160@60 Hz)
- Ethernet
  LAN1: Intel® I219LM Clarkville-V with Intel® AMT 11.0 supported
  LAN2: Intel® I210 PCIe controller
- External I/O Interface
  2 x USB 3.2 Gen 1 (5Gb/s)
- Internal I/O Interface
  1 x KB/MS (1x6 pin)
  1 x LPT (2x13 pin)
  1 x mSATA (SATA & USB signal)
  1 x USB 2.0 (180° Type-A)
  2 x RS-232 (2x5pin, P=2.54)
  2 x RS-232/422/485 (2x5 pin, P=2.54)
  2 x USB 3.2 Gen 1 (5Gb/s) (2x10 pin)
  6 x SATA 6Gb/s (RAID 0/1/5/10 supported)
  6 x USB 2.0 (2x4 pin, P=2.54)
- Front Panel
  1 x Front Panel (1x10 pin, power LED, HDD LED, speaker, power button, reset button)
- LAN LED
  2 x LAN LED (1x2 pin)
- Audio
  Support 7.1 channel HD Audio by IEI AC-KIT-888S-R10 kit
- TPM
  1 x TPM (2x10 pin)
- SMBus
  1 x SMBus (1x4 pin)
- I²C
  1 x I²C (1x4 pin)
- iRIS Remote Management Module
  1 x iRIS-2400 slot (optional)
- Expansion
  16-lane PCIe link from CPU via golden finger:
  Supports one PCIe x16, or two PCIe x8, or one PCIe x8 + two PCIe x4 on the backplane (configured via BIOS)
  4-lane PCIe link from PCH via golden finger:
  Supports four PCIe x1 slots or one PCIe x4 slot on the backplane (configured via BIOS switch)
  1 x Full/Half-size PCIe Mini card slot
  Four PCI signal via golden finger
- Watchdog Timer
  Software programmable, supports 1~255 sec. system reset
- Digital I/O
  8-bit digital I/O (2x5 pin)
- Fan Connector
  1 x CPU smart fan (1x4 pin)
  1 x System smart fan (1x3 pin)
- Power Supply
  5V/12V, AT/ATX support
- Power Consumption
  5V@3.12A, 12V@6.85A, 3.3V@1.13A, 5VSB@0.15A
  (Intel® Core™ i7-6700K 4.0GHz CPU with 64GB (16GB x 4) 2133 MHz DDR4 memory)
- Operating Temperature
  -20°C ~ 60°C
- Operating Humidity
  5% ~ 95%, non-condensing
- Dimensions: 338 mm x 126 mm
- Weight: GW: 1000g / NW: 420g
- CE/FCC compliant

Features

- PICMG 1.3 full-size CPU Card
- LGA 1151 Intel® 6th/7th generation Core™ i7/i5/i3, Pentium® or Celeron® processor supported
- Four 288-pin 1866/2133MHz dual-channel DDR4 UDIMMs support up to 64GB
- Supports dual independent display by VGA & internal DP pin header
- Supports PCIe Mini device & mSATA via PCIe Mini card slot
- Intel® PCIe GbE with Intel® AMT 11.0 supported
- Supports RAID 0, 1, 5, 10 function via SATA 6Gb/s
- TPM 1.2 & 2.0 hardware security function supported by TPM module

Packing List

1 x PCIE-Q170 single board computer	1 x Mini jumper pack
1 x SATA cable	1 x QIG

Ordering Information

Part No.	Description
PCIE-Q170-R10	Full-size PICMG 1.3 CPU Card supports LGA1151 Intel® Core™ i7/i5/i3/Pentium®/Celeron® CPU per Intel® Q170, DDR4, VGA/ iDP, Dual Intel® PCIe GbE, PCIe Mini, USB 3.2 Gen 1 (5Gb/s), SATA 6Gb/s, mSATA, HD Audio, iAMT and RoHS
PCIE-Q170-i2-R10**	Full-size PICMG 1.3 CPU Card supports LGA1151 Intel® Core™ i7/i5/i3/Pentium®/Celeron® CPU per Intel® Q170, DDR4, VGA/ iDP, Dual Intel® PCIe GbE, PCIe Mini, USB 3.2 Gen 1 (5Gb/s), SATA 6Gb/s, mSATA, HD Audio, iAMT, iRIS-2400 and RoHS
19800-000049-RS	LPT flat cable, 240mm, P=2.54
19800-000075-RS	PS/2 KB/MS cable with bracket, 220mm, P=2.0
19800-003100-300-RS	Dual port USB 2.0 cable with bracket, 300mm, P=2.54
19800-010500-200-RS	USB 3.2 Gen 1 (5Gb/s) cable with bracket, 450mm
32102-000100-200-RS	SATA power cable, MOLEX 5264-4P to SATA15P
32205-000702-100-RS	RS-232 cable, 230mm, P=2.54
32205-003800-300-RS	RS-422/485 cable, 200mm, P=2.0
AC-KIT-892HD-R10	7.1 channel HD Audio kit with Realtek ALC892 support dual audio streams
CF-1150SA-R10	Special cooler kit for LGA1150, High-performance compatible, 95W
CF-1150SB-R11	Special cooler kit for LGA1150, High-performance compatible, 65W
CF-1150SC-R20	Special cooler kit for LGA1150, 1U chassis compatible, 65W
CF-1150SE-R11	Special cooler kit for LGA1150, high-performance compatible, 95W
CF-1150SF-R10	Special cooler kit for LGA1150, 1U chassis compatible, 54W
DP-DP-R10	DisplayPort to DisplayPort converter board (for IEI iDP connector)
DP-DVI-R10	DisplayPort to DVI-D converter board (for IEI iDP connector)
DP-HDMI-R10	DisplayPort to HDMI converter board (for IEI iDP connector)
DP-LVDS-R10	DisplayPort to LVDS converter board (for IEI iDP connector)
DP-VGA-R10	DisplayPort to VGA converter board (for IEI iDP connector)
SAIDE-KIT01-R10	SATA to IDE/CF Converter board

**By order production, MOQ: 100

PCIE-H810

Full-size PICMG 1.3 CPU card supports LGA 1150 Intel® Core™ i7/i5/i3, Pentium® and Celeron® with Intel® H81, DDR3, VGA, iDP, Dual PCIe GbE, SATA 6Gb/s, mSATA, USB 3.2 Gen 1 (5Gb/s), RS-232, HD Audio and RoHS

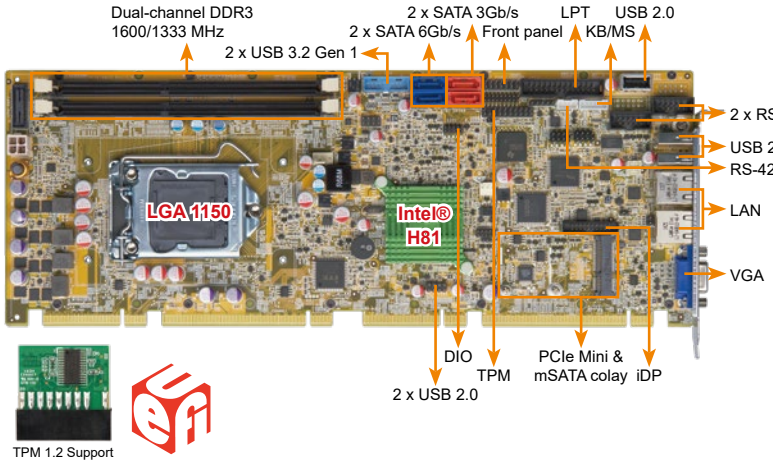

TPM 1.2 Support



Enhanced component protection

Prevent the damage of bottom components



PCIe Mini & mSATA colay

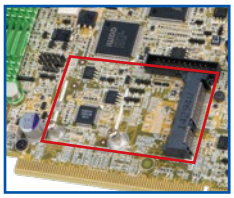

The PCIe Mini interface provides PCIe x1, USB and mSATA signal for full-size or half-size PCIe Mini devices, such as SSD, mSATA and wireless LAN cards.



◄ mSATA



▲ Half-size wireless LAN card

Specifications

- CPU
  4th generation LGA 1150 Intel® Core™ i7/i5/i3, Pentium® or Celeron® processor supported
- Chipset
  Intel® H81
- Memory
  Two 240-pin 1600/1333 MHz dual-channel unbuffered DDR3 & DDR3L SDRAM DIMMs support up to 16 GB
- BIOS
  UEFI
- Graphics Engine
  Intel® HD Graphics Gen 7.5 supports DX11.1, OpenCL 1.2 and OpenGL 3.2
  Full MPEG2, VC1, AVC Decode
- Display Output
  Dual independent display
  1 x VGA (up to 1920x1200@60 Hz)
  1 x iDP interface for HDMI, LVDS, VGA, DVI, DP (up to 3840x2160@60 Hz)
- Ethernet
  Dual Realtek RTL8111E PCIe GbE controllers supported
- External I/O Interface
  2 x USB 2.0
- Internal I/O Interface
  1 x KB/MS (1x6 pin)
  1 x LPT (2x13 pin)
  1 x RS-422/485 (1x4 pin, P=2.0)
  1 x USB 2.0 (180° Type-A)
  2 x RS-232 (2x5 pin, P=2.54)
  2 x SATA 3Gb/s (AHCI supported, no RAID)
  2 x SATA 6Gb/s
  2 x USB 3.2 Gen 1 (5Gb/s) (2x10 pin)
  4 x USB 2.0 (Golden finger)
  4 x USB 2.0 (2x4 pin, P=2.54)
- Audio
  Support 7.1-channel HD Audio by IEI AC-KIT-888S-R10 kit
- Front Panel
  1 x Front panel (2x7 pin, power LED, HDD LED, speaker, power button, reset button)
- LAN LED
  2 x LAN LED (1x2 pin)
- SMBus
  1 x SMBus (1x4 pin)
- I²C
  1 x I²C (1x4 pin)
- Infrared Interface
  1 x Infrared Interface (1x5 pin)
- Expansion
  1 x Full/Half-size PCIe Mini slot (supports mSATA)
  One PCIe x16 & four PCIe x1 signal via golden finger
- Watchdog Timer
  Software programmable supports 1~255 sec. system reset
- Digital I/O
  8-bit digital I/O (2x5 pin)
- Fan Connector
  1 x CPU smart fan (1x4 pin)
  1 x System smart fan (1x3 pin)
- Power Supply
  5V/12V, AT/ATX support
- Power Consumption
  5V@3.41A, 12V@0.35A, Vcore_12V@7.52A, 3.3V@1.41A, 5VSB@0.12A
  (Intel® Core™ i7-4770K 3.90 GHz CPU with 8 GB (two 4 GB) 1333 MHz DDR3 memory)
- Operating Temperature: -20°C ~ 60°C
- Storage Temperature: -30°C ~ 70°C
- Operating Humidity: 5% ~ 95%, non-condensing
- Dimensions: 338 mm x 126 mm
- Weight: GW: 1000g / NW: 420g
- CE/FCC compliant

Features

- PICMG 1.3 full-size solution
- 4th generation LGA 1150 Intel® Core™ i7/i5/i3, Pentium® or Celeron® processor supported
- Two 1600/1333 MHz DDR3 SDRAM DIMMs support up to 16 GB
- Dual Realtek PCIe GbE supported
- TPM v1.2 hardware security function supported by TPM module
- Stiffener bars
- IEI jumper-less function

Packing List

1 x PCIE-H810 single board computer
2 x SATA cable
1 x QIG

Ordering Information

Part No.	Description
PCIE-H810-R10	Full-size PICMG 1.3 CPU Card supports LGA 1150 Intel® Core™ i7/i5/i3, Pentium® and Celeron® CPU with Intel® H81, DDR3, VGA, iDP, dual PCIe GbE, SATA 6Gb/s, mSATA, RS-232, USB 3.2 Gen 1 (5Gb/s), HD Audio and RoHS
19800-000049-RS	LPT flat cable, 240mm, P=2.54
19800-000075-RS	PS/2 KB/MS cable with bracket, 220mm, P=2.0
19800-003100-300-RS	Dual port USB 2.0 cable with bracket, 300mm, P=2.54
19800-010500-200-RS	USB 3.2 Gen 1 (5Gb/s) cable with bracket, 450mm
32102-000100-200-RS	SATA power cable, MOLEX 5264-4P to SATA15P
32205-000702-100-RS	RS-232 cable, 230mm, P=2.54
32205-003800-300-RS	RS-422/485 cable, 200mm, P=2.0
AC-KIT-892HD-R10	7.1-channel HD Audio kit with Realtek ALC892 supports dual audio streams
CF-1150SB-R11	Special cooler kit for LGA 1150, high-performance compatible, 65W
CF-1150SC-R20	Special cooler kit for LGA 1150, 1U chassis compatible, 65W
CF-1150SE-R11	Special cooler kit for LGA 1150, high-performance compatible, 95W
CF-1150SF-R10	Special cooler kit for LGA 1150, high-performance compatible, 54W
DP-DP-R10	DisplayPort to DisplayPort converter board (for IEI iDP connector)
DP-DVI-R10	DisplayPort to DVI-D converter board (for IEI iDP connector)
DP-HDMI-R10	DisplayPort to HDMI converter board (for IEI iDP connector)
DP-LVDS-R10	DisplayPort to LVDS converter board (for IEI iDP connector)
DP-VGA-R10	DisplayPort to VGA converter board (for IEI iDP connector)
TPM-IN01-R20	20-pin Infineon TPM module, software management tool, firmware v3.17

PCIE-Q870-i2

Full-size PICMG 1.3 CPU Card supports LGA 1150 Intel® Core™ i7/i5/i3, Pentium® and Celeron® CPU per Intel® Q87, DDR3, VGA, iDP, Dual PCIe GbE, mSATA, PCIe Mini, iRIS-2400 and RoHS

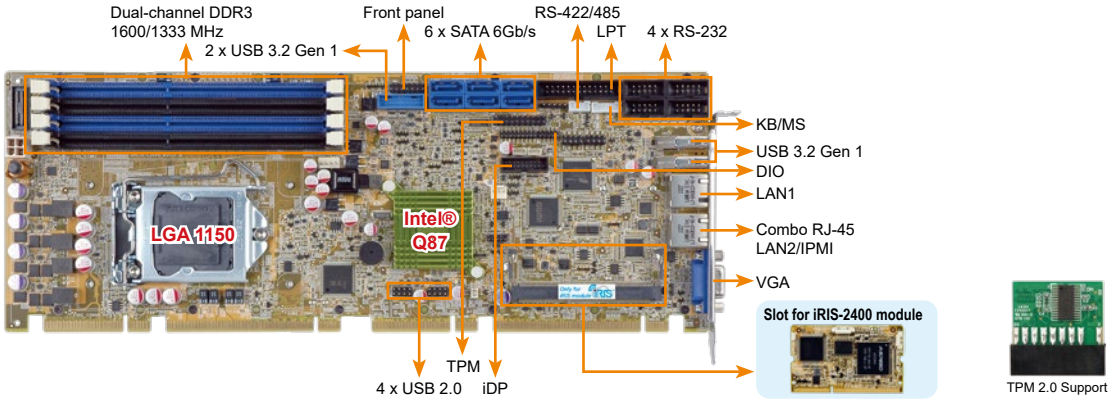

IPMI 2.0 Compliant

DDR3 1600 | USB 3.2 | SATA 6Gb/s | PCIe GbE | mSATA | iDP

Specifications

- CPU
  LGA 1150 Intel® 4th generation Core™ i7/i5/i3, Pentium® or Celeron® processor supported
- Chipset
  Intel® Q87
- Memory
  Four 240-pin 1600/1333 MHz dual-channel unbuffered DDR3 & DDR3L SDRAM DIMMs support up to 32 GB
- BIOS
  UEFI BIOS
- Graphics Engine
  Intel® HD Graphics Gen 7.5 supports DX11.1, OpenCL 1.2 and OpenGL 3.2
  Full MPEG2, VC1, AVC Decode
- Display Output
  1 x VGA (up to 1920x1200@60 Hz)
  1 x iDP interface for HDMI, LVDS, VGA, DVI, DP (up to 3840x2160@60 Hz)
- Ethernet
  LAN1: Intel® I217LM with Intel® AMT 9.0 support
  LAN2: Intel® I210-AT PCIe controller with NCSI support
- External I/O Interface
  2 x USB 3.2 Gen 1 (5Gb/s)
- Internal I/O Interface
  1 x KB/MS (1x6 pin)
  1 x LPT (2x13 pin)
  1 x mSATA
  1 x RS-422/485 (1x4 pin, P=2.0)
  6 x SATA 6Gb/s (RAID 0/1/5/10 supported)
  2 x USB 3.2 Gen 1 (5Gb/s) (2x10 pin)
  4 x RS-232 (2x5pin, P=2.54)
  4 x USB 2.0 (2x4 pin, P=2.54)
  4 x USB 2.0 (Golden finger)
- Front Panel
  1 x Front panel (2x7 pin, power LED, HDD LED, speaker, power button, reset button)
- LAN LED
  2 x LAN LED (1x2 pin)
- Audio
  Support 7.1 channel HD Audio by IEI AC-KIT-888S-R10 kit
- TPM
  1 x TPM (2x10 pin)
- SMBus
  1 x SMBus (1x4 pin)
- I²C
  1 x I²C (1x4 pin)
- Infrared Interface
  1 x Infrared Interface (1x5 pin)
- iRIS Remote Management Module
  1 x iRIS-2400 slot
- Expansion
  PCIe signal and PCI signal via golden finger
  1 x Full-size PCIe Mini card slot (supports mSATA)
- Watchdog Timer
  Software programmable, supports 1~255 sec. system reset
- Digital I/O
  8-bit digital I/O (2x5 pin)
- Fan Connector
  1 x CPU smart fan (1x4 pin)
  1 x System smart fan (1x3 pin)
- Power Supply: 5V/12V, AT/ATX support
- Power Consumption
  5V@3.55A, 12V@0.37A, Vcore_12V@7.61A, 3.3V@1.55A, 5VSB@0.13A (Intel® Core™ i7-4770K 3.90 GHz CPU with 16 GB (4x4 GB) 1333 MHz DDR3 memory)
- Operating Temperature: -20°C ~ 60°C
- Storage Temperature: -30°C ~ 70°C
- Operating Humidity: 5% ~ 95%, non-condensing
- Dimensions: 338 mm x 126 mm
- Weight: GW: 1200g / NW: 420g
- CE/FCC compliant

Features

- PICMG 1.3 full-size graphics grade solution
- LGA 1150 Intel® 4th generation Core™ i7/i5/i3, Pentium® or Celeron® processor supported
- Four 240-pin 1600/1333 MHz dual-channel DDR3 DIMMs support up to 32 GB memory
- Supports dual independent display by VGA & iDP interfaces
- Supports PCIe Mini devices and mSATA via PCIe Mini socket
- Supports RAID function via SATA 6Gb/s
- Supports IPMI 2.0 via iRIS-2400 module

Packing List

1 x PCIE-Q870-i2 single board computer
1 x Dual RS-232 cable
1 x USB 2.0 cable
2 x SATA cable
1 x QIG

Ordering Information

Part No.	Description
PCIE-Q870-i2-R10	Full-size PICMG 1.3 CPU card supports LGA 1150 Intel® Core™ i7/i5/i3, Pentium® and Celeron® CPU with Intel® Q87, DDR3, VGA, iDP, dual Intel® PCIe GbE, SATA 6Gb/s, mSATA, RS-232, PCIe Mini, Audio, iRIS-2400 and RoHS
iRIS-2400-R10	IPMI 2.0 adapter card with AST2400 BMC chip for DDR3 SO-DIMM socket interface
19800-000049-RS	LPT flat cable, 240mm, P=2.54
19800-000075-RS	PS/2 KB/MS cable with bracket, 220mm, P=2.0
19800-010500-200-RS	USB 3.2 Gen 1 (5Gb/s) cable with bracket, 450mm
32102-000100-200-RS	SATA power cable, MOLEX 5264-4P to SATA15P
32205-003800-300-RS	RS-422/485 cable, 200mm, P=2.0
AC-KIT-892HD-R10	7.1-channel HD Audio kit with Realtek ALC892 supports dual audio streams
CF-1150SB-R11	Special cooler kit for LGA 1150, high-performance compatible, 65W
CF-1150SC-R20	Special cooler kit for LGA 115X, 1U chassis compatible, 65W, copper
CF-1150SE-R11	Special cooler kit for LGA 115X, high-performance compatible, 95W, copper
CF-1150SF-R10	Special cooler kit for LGA 115X Intel® CPU, 107x70x35, 54W
DP-DP-R10	DisplayPort to DisplayPort converter board (for IEI iDP connector)
DP-DVI-R10	DisplayPort to DVI-D converter board (for IEI iDP connector)
DP-HDMI-R10	DisplayPort to HDMI converter board (for IEI iDP connector)
DP-LVDS-R10	DisplayPort to LVDS converter board (for IEI iDP connector)
DP-VGA-R10	DisplayPort to VGA converter board (for IEI iDP connector)
TPM-IN01-R20	20-pin Infineon TPM module, software management tool, firmware v3.17

PICMG 1.3 Passive Backplane

Selection Guide

PAC series wall-mount chassis | 4U/5U rack-mount chassis | 1U/2U rack-mount chassis

PICMG 1.3 (PCIe+PCI)	Model	PE-2SD1	PE-3S1	PE-4S	PE-5S	PE-5S2	PE-6S	PE-6S2	PE-6SD	PE-6SD3
Total Slot		2	5	4	5	5	6	6	5	5
Expansion Slots	PCIe Slots x16 *	1 (Gen 2.0)	1 (Gen 3.0)	1	1 (2.0)	1 (Gen 2.0)	1 (Gen 2.0)	1 (Gen 2.0)	1 (Gen 2.0)	1 (Gen 2.0)
	PCIe Slots x4		1 (Gen 3.0)	1	1 (Gen 2.0)			1 (Gen 2.0)		1 (Gen 2.0)
	PCIe Slots x1					3 (Gen 2.0)	2 (Gen 2.0)		3 (Gen 2.0)	
	PCI-X Slots									
	PCI Slots			1	2		2	3		2
USB Connectors by Pin Header		4		4	4	4	4	4	4	4
PSU Type		24+4-pin ATX	24+4-pin ATX	24+4-pin ATX	24+4-pin ATX	24+4-pin ATX	24+4-pin ATX	24+4-pin ATX	24+4-pin ATX	24+4-pin ATX
Chassis		RACK-1150-PE	RACK-500AI	N/A	RACK-500G	RACK-500G	RACK-305G RACK-360G RACK-3000G PAC- 1700G PAC-125	PAC-106G PAC-1000G	N/A	N/A
Note		1U Type							2U Type	2U Type

PICMG 1.3 (PCIe+PCI)	Model	PE-7S	PE-8S	PE-9S	PE-10S	PE- 10S2	PXE-13S	PXE-19S2
Total Slot		7	8	9	10	10	13	19
Expansion Slots	PCIe Slots x16 *	1 (Gen 2.0)	1 (Gen 2.0)	1 (Gen 2.0)	1 (Gen 2.0)	1 (Gen 2.0)	1 (Gen 3.0)	1 (Gen 3.0)
	PCIe Slots x4							
	PCIe Slots x1	2 (Gen 2.0)	3 (Gen 2.0)	4 (Gen 2.0)	4 (Gen 2.0)	4 (Gen 2.0)	3 (Gen 3.0)	1 (Gen 3.0)
	PCI-X Slots							
	PCI Slots	3	3	3	4	4	8	16
USB Connectors by Pin Header		4	4	4	4	4	4	4
PSU Type		24+4-pin ATX	24+4-pin ATX	24+4-pin ATX	24+4-pin ATX	24+4-pin ATX	24+4-pin ATX	24+4-pin ATX
Chassis		PAC-1700G	PAC-125G	N/A	RACK-305G RACK-360G RACK-3000G	RACK-3000G RACK-305G RACK-360G	RACK-3000G RACK-305G RACK-360G	N/A
Note							PCIe to PCI Bridge Backplane	

*When using a PCIe x16 add-on card, the length of the card must not exceed 167mm or 6.57 inches.

IEI Graphics Grade Backplane Solution

The graphics grade backplane solution targets the applications which concern system speed and performance. It has higher performance over cost ratio than the previous PICMG 1.0 solution.

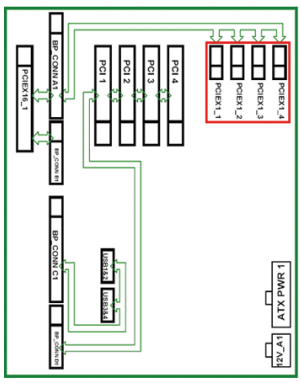

PE-3S1 PE-4S PE-5S PE-6S2 PE-9S PE-10S PE-10S2

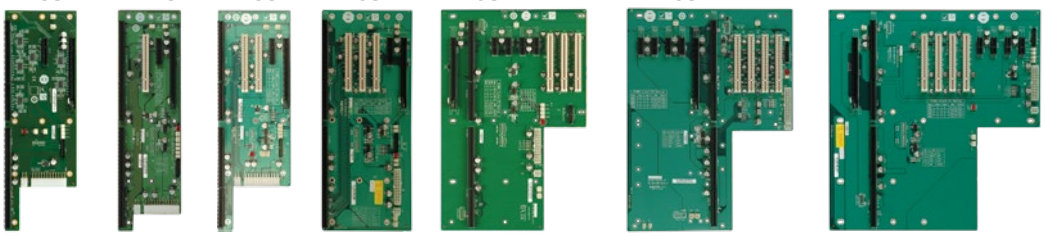

- Twenty PCIe lanes in total
- One PCIe x16 slot
- Up to four PCIe x1 or one PCIe x4 slot
- Up to four local PCI slots (w/o bridge)

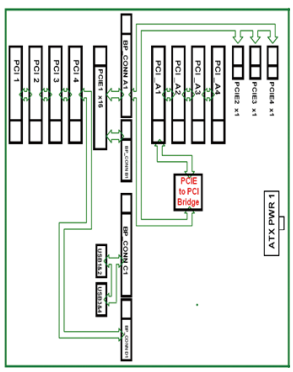

PXE-13S



PXE-19S2

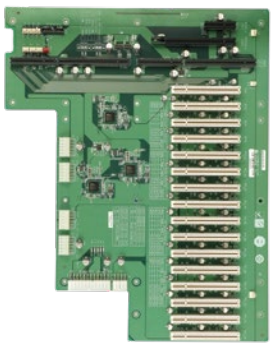

- Twenty PCIe lanes in total
- One PCIe x16 slot
- Up to four PCIe x1 slots
- PCI slots expandable via PCIe to PCI bridge

PE-2SD1-R10

For 1U system!

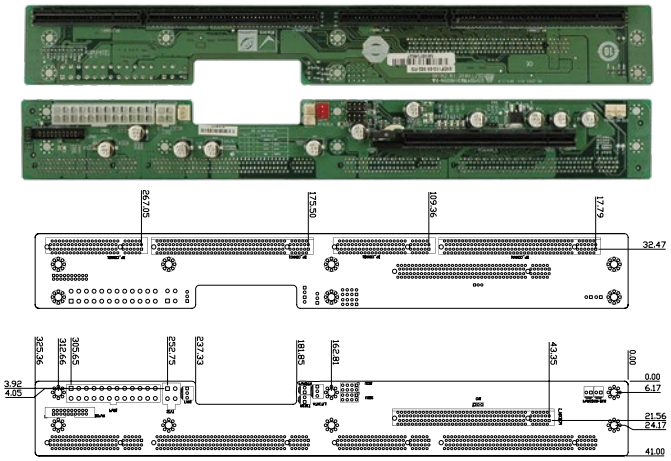

Ordering Information	
PE-2SD1-R10	2-slot backplane with one PCIe slot (PCIe Gen 2.0)
RACK-1150G-PE	1U full-size rack-mount chassis

PE-3S1-R10

New

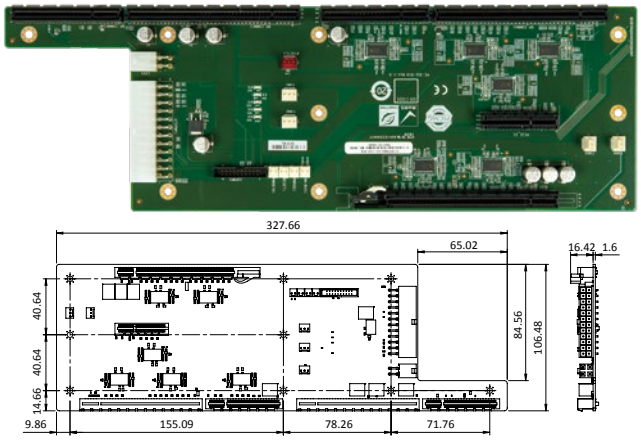

Ordering Information	
PE-3S1-R10	5-slot PICMG 1.3 backplane with one PCIe x16 slot and one PCIe x4 Slot, RoHS (PCIe Gen 3.0)
RACK-500AI	5U 5-slot full-size rackmount chassis

PE-4S-R40

Mounting holes compatible with PCI-4S

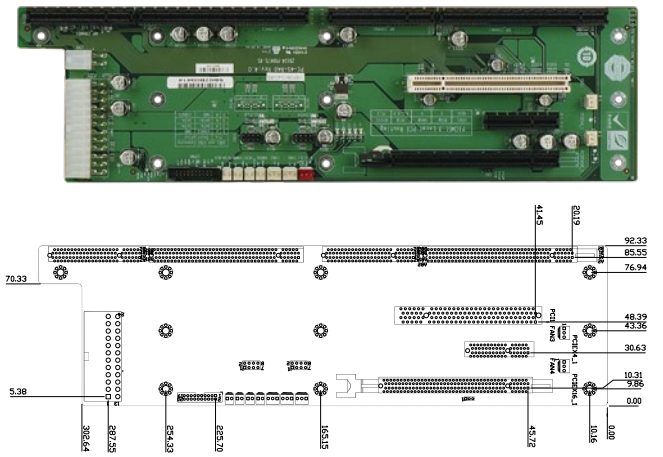

Ordering Information	
PE-4S-R40	4-slot backplane with one PCIe x16 slot, one PCIe x4 slot and one PCI slot

PE-5S-R40

Mounting holes compatible with PCI-5S

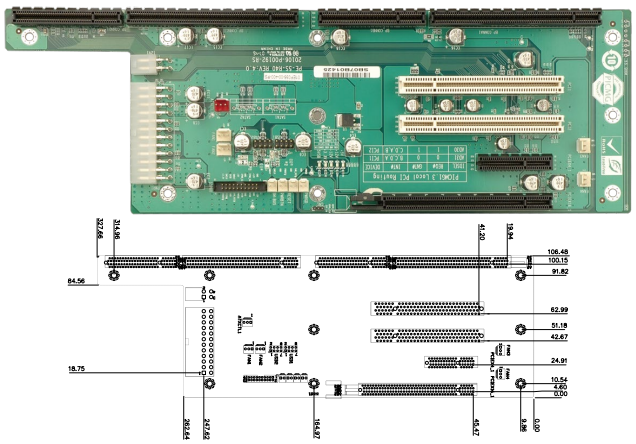

Ordering Information	
PE-5S-R40	5-slot backplane with one PCIe x16 slot, one PCIe x4 slot and two PCI slots (PCIe Gen 2.0)
RACK-500G	5U 5-slot full-size rack-mount chassis

PE-5S2-R40

Mounting holes compatible with PCI-5S

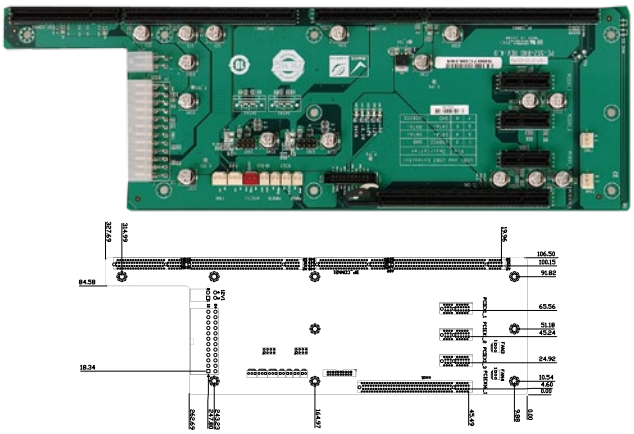

Ordering Information	
PE-5S2-R40	5-slot backplane with one PCIe x16 slot and three PCIe x1 slots(PCIe Gen 2.0)
RACK-500G	5U 5-slot full-size rack-mount chassis

PE-6S-R41

Mounting holes compatible with PCI-7S

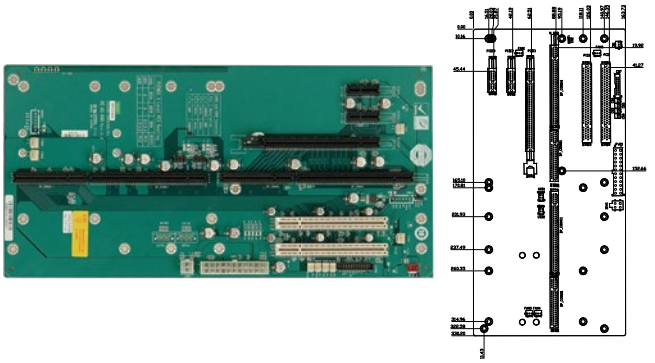

Ordering Information	
PE-6S-R41	6-slot backplane with one PCIe x16 slot, two PCIe x1 slots and two PCI slots (PCIe Gen 2.0)
RACK-305G	4U 14-slot full-size rack-mount chassis
RACK-360G	4U 14-slot full-size rack-mount chassis
RACK-3000G	4U 14-slot full-size rack-mount chassis
PAC-1700G	7-slot full-size compact chassis
PAC-125G	10-slot full-size compact chassis

PE-6S2-R40

Mounting holes compatible with PCI-6S

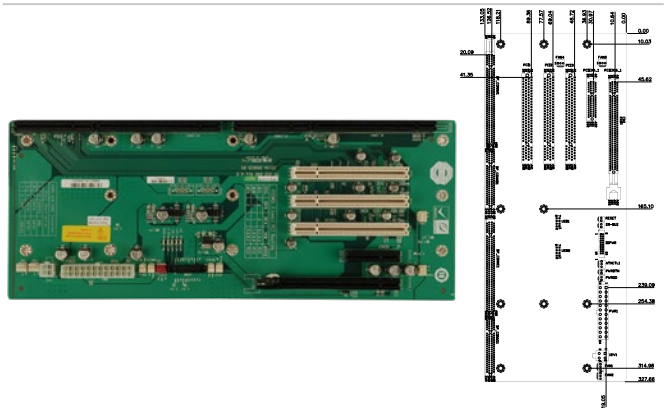

Ordering Information	
PE-6S2-R40	6-slot backplane with one PCIe x16 slot, one PCIe x4 slot and three PCI slots (PCIe Gen 2.0)
PAC-106G *	6-slot full-size compact chassis
PAC-1000G	6-slot full-size compact chassis

*** When using a PCIe x16 add-on card, the length of the card must not exceed 167mm or 6.57 inches.**

PE-6SD-R40

Mounting holes compatible with PCI-6SD

2U Type

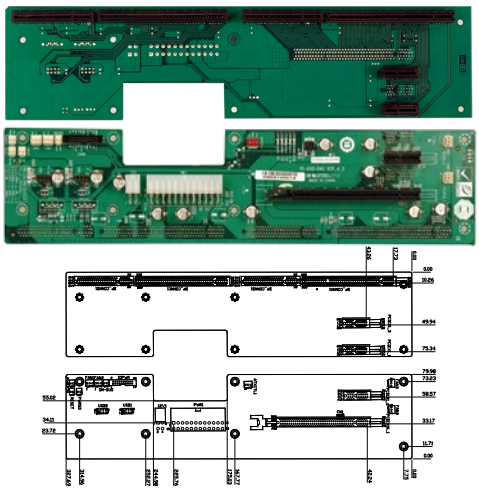

Ordering Information	
PE-6SD-R40	5-slot backplane with one PCIe x16 slot and three PCIe x1 slots (PCIe Gen 2.0)

PE-6SD3-R40

Mounting holes compatible with PCI-6SD

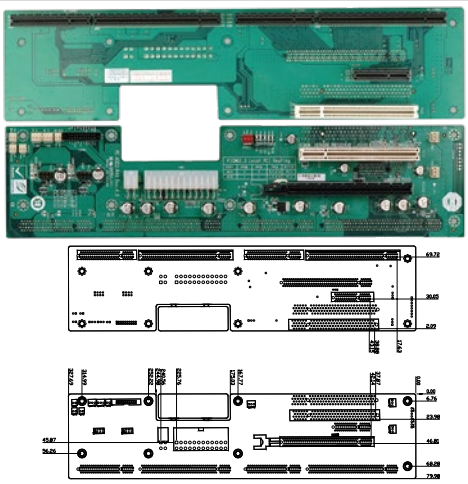

Ordering Information	
PE-6SD3-R40	5-slot backplane with one PCIe x16 slot, one PCIe x4 slot and two PCI slots (PCIe Gen 2.0)

PE-7S-R40

Mounting holes compatible with PCI-7S

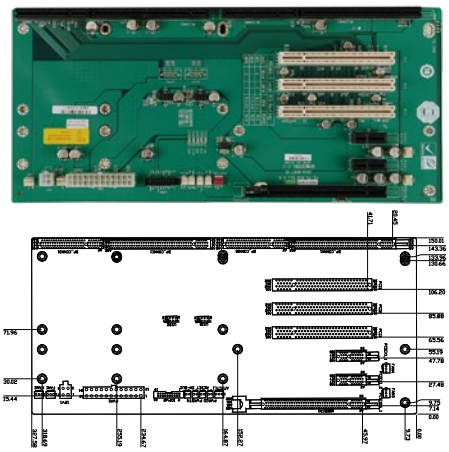

Ordering Information	
PE-7S-R40	7-slot backplane with one PCIe x16 slot, two PCIe x1 slots and three PCI slots (PCIe Gen 2.0)
PAC-1700G	7-slot full-size compact chassis

PE-8S-R40

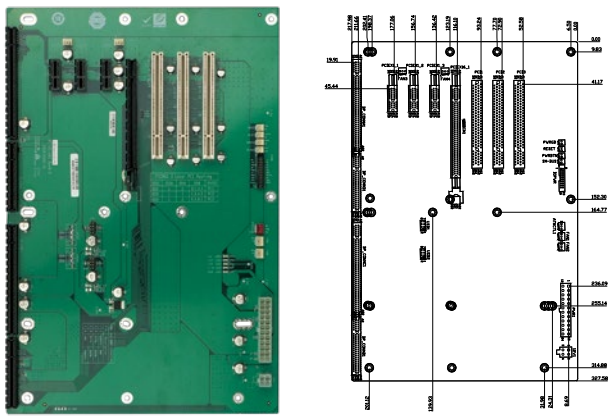

Ordering Information	
PE-8S-R40	8-slot backplane with one PCIe x16 slot, three PCIe x1 slots and three PCI slots (PCIe Gen 2.0)
PAC-125G	10-slot full-size compact chassis

PE-9S-R40

Mounting holes compatible with PCI-10S2

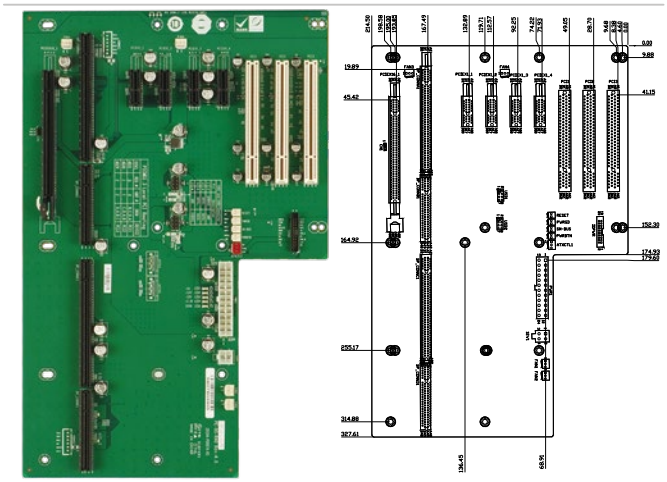

Ordering Information	
PE-9S-R40	9-slot backplane with one PCIe x16 slot, four PCIe x1 slots and three PCI slots (PCIe Gen 2.0)

PE-10S-R40

Mounting holes compatible with PCI-14S

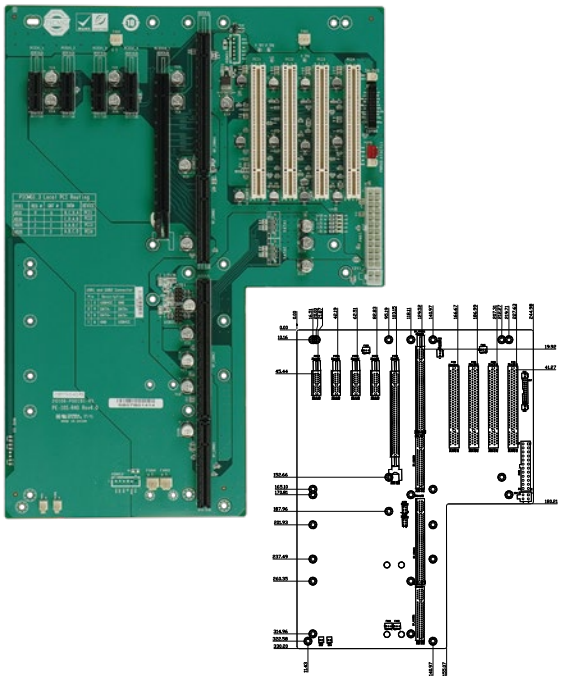

Ordering Information	
PE-10S-R40	10-slot backplane with one PCIe x16 slot, four PCIe x1 slots and four PCI slots (PCIe Gen 2.0)
RACK-305G	4U 14-slot full-size rack-mount chassis
RACK-360G	4U 14-slot full-size rack-mount chassis
RACK-3000G	4U 14-slot full-size rack-mount chassis

PXE-13S-R51

Mounting holes compatible with PCI-14S

(PCIe to PCI Bridge)

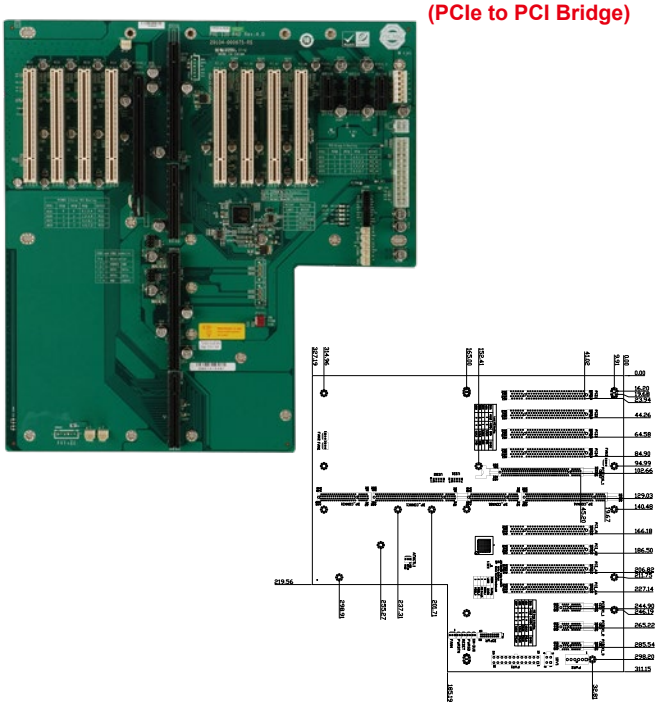

Ordering Information	
PXE-13S-R51	13-slot backplane with one PCIe x16 slot, three PCIe x1 slots and eight PCI slots (PCIe Gen 3.0)
RACK-3000G	4U 14-slot full-size rack-mount chassis
RACK-305G	4U 14-slot full-size rack-mount chassis
RACK-360G	4U 14-slot full-size rack-mount chassis

PE-10S2-R40

Mounting holes compatible with PCI-14S

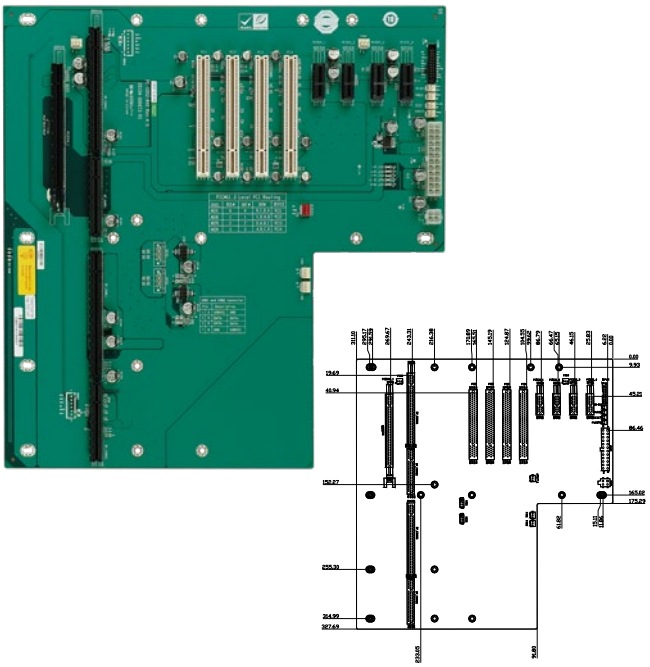

Ordering Information	
PE-10S2-R40	10-slot backplane with one PCIe x16 slot, four PCIe x1 slots and four PCI slots (PCIe Gen 2.0)
RACK-3000G	4U 14-slot full-size rack-mount chassis
RACK-305G	4U 14-slot full-size rack-mount chassis
RACK-360G	4U 14-slot full-size rack-mount chassis

PXE-19S2-R10

Mounting holes compatible with PCI-19S

(PCIe to PCI Bridge)

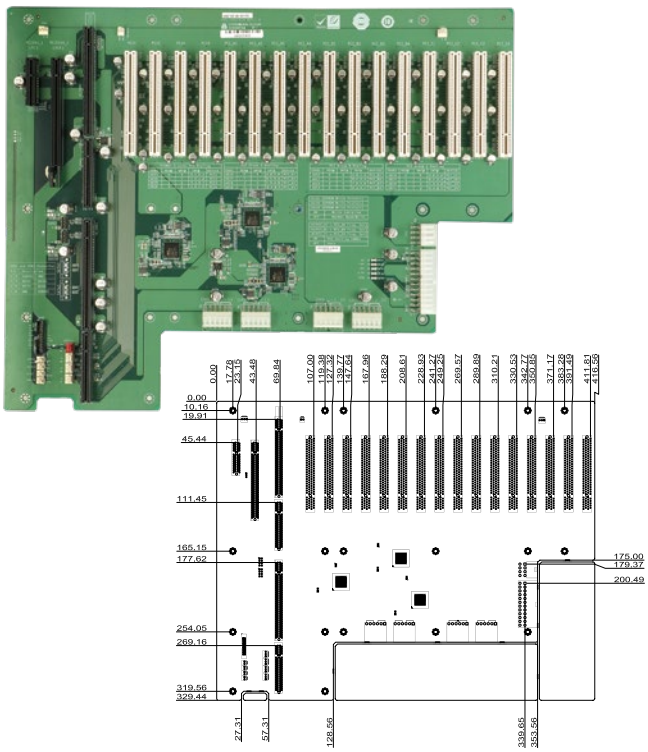

Ordering Information	
PXE-19S2-R10	19-slot backplane with one PCIe x16 slot, one PCIe x1 slot and sixteen PCI slots (PCIe Gen 3.0)

WSB-H810

Full-size PICMG 1.0 CPU Card supports LGA 1150 Intel® Core™ i7/i5/i3, Pentium® and Celeron® CPU with Intel® H81, DDR3, VGA, iDP, Dual Intel® GbE, PCIe Mini, USB 3.2 Gen 1 (5Gb/s), SATA 6Gb/s, mSATA, RS-232, HD Audio and RoHS

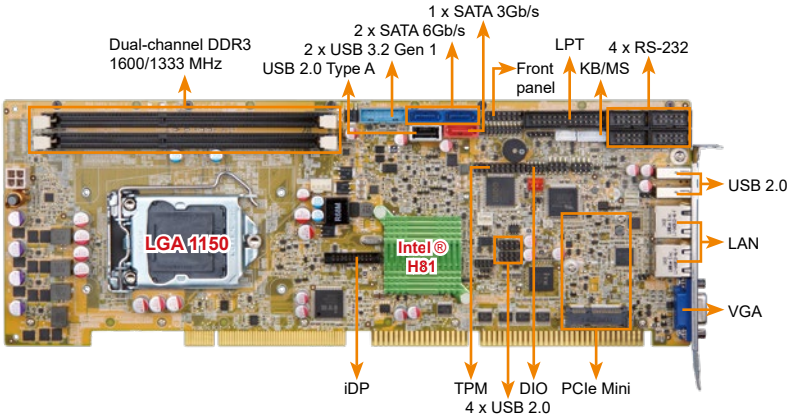

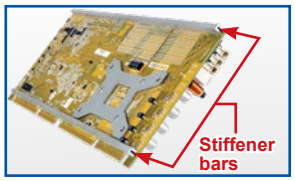

Enhanced stability

Strengthen the mechanism
Prevent PCB bending

PCIe Mini & mSATA connector

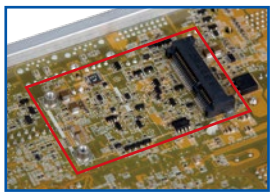

Support PCIe Mini & mSATA



◄ mSATA

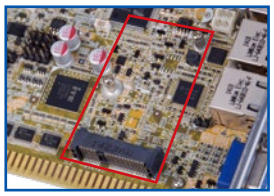

Top-side PCIe Mini connector supports PCIe signal for half-size or full-size PCIe device. Solder-side PCIe Mini connector supports SATA 3Gb/s signal for full-size mSATA.



◄ PCIe Mini



Specifications

- ◆ CPU
  4th generation LGA 1150 Intel® Core™ i7/i5/i3, Pentium® or Celeron® processor supported
- ◆ Chipset
  Intel® H81
- ◆ Memory
  Twp 240-pin 1600/1333 MHz dual-channel DDR3 & DDR3L SDRAM unbuffered DIMMs support up to 16 GB
- ◆ BIOS
  UEFI
- ◆ Graphics Engine
  Intel® HD Graphics Gen 7.5 supports DX11.1 and OpenCL 1.2, OpenGL 3.2
  Full MPEG2, VC1, AVC Decode
- ◆ Display Output
  Dual independent display
  1 x VGA (up to 1920x1200@60 Hz)
  1 x iDP interface for HDMI, LVDS, VGA, DVI, DP (up to 3840x2160@60 Hz)
- ◆ Ethernet
  LAN1: Intel® I217-LM Ethernet controller
  LAN2: Intel® I211-AT Ethernet controller
- ◆ Audio
  Support 7.1 channel HD Audio by IEI AC-KIT-888S-R10 kit
- ◆ External I/O Interface
  2 x USB 2.0
- ◆ Internal I/O Interface
  1 x KB/MS (1x6 pin)
  1 x LPT (2x13 pin)
  1 x RS-422/485 (1x4 pin, P=2.0)
  1 x USB 2.0 (180° Type-A)
  1 x SATA 3Gb/s (AHCI supported, no RAID)
  2 x SATA 6Gb/s
  2 x USB 3.2 Gen 1 (5Gb/s) (2x10 pin)
  4 x RS-232 (2x5 pin, P=2.54)
  4 x USB 2.0 (2x4 pin, P=2.54)
- ◆ Front Panel
  1 x Front panel (2x7 pin, power LED, HDD LED, speaker, power button, reset button)
- ◆ LAN LED
  2 x LAN LED (1x2 pin)
- ◆ Digital I/O
  8-bit digital I/O (2x5 pin)
- ◆ TPM
  1 x TPM (2x10 pin)
- ◆ SMBus
  1 x SMBus (1x4 pin)
- ◆ I²C
  1 x I²C (1x4 pin)
- ◆ Infrared Interface
  1 x Infrared Interface (1x5 pin)
- ◆ Expansion
  1 x Full-size PCIe Mini card slot (support mSATA)
  PCI and ISA signal via golden finger
- ◆ Watchdog Timer
  Software programmable supports 1~255 sec. system reset
- ◆ Fan Connector
  1 x CPU smart fan (1x4 pin)
  1 x System smart fan (1x3 pin)
- ◆ Power Supply: 5V/12V, AT/ATX support
- ◆ Power Consumption
  5V@3.4A, 12V@0.36A, Vcore_12V@7.48A, 3.3V@1.42A, 5VSB@0.13A
  (Intel® Core™ i7-4770K 3.90 GHz CPU with 8 GB (two 4 GB) 1333 MHz DDR3 memory)
- ◆ Operating Temperature: -20°C ~ 60°C
- ◆ Storage Temperature: -30°C ~ 70°C
- ◆ Operating Humidity: 5% ~ 95%, non-condensing
- ◆ Dimensions: 338 mm x 122 mm
- ◆ Weight: GW: 1000g / NW: 260g
- ◆ CE/FCC compliant

Features

- Full-size PICMG 1.0 with LGA 1150 Intel® CPU
- Two 1600/1333 MHz DDR3 SDRAM DIMM slots support up to 16 GB of memory
- Dual Intel® Gigabit Ethernet LAN controller
- SATA 6Gb/s and USB 3.2 Gen 1 (5Gb/s) supported
- TPM v1.2 hardware security function supported by TPM module
- Stiffener bars
- IEI jumper-less function

Packing List

1 x WSB-H810 single board computer	
2 x SATA cable	1 x QIG

Ordering Information

Part No.	Description
WSB-H810-R10	Full-size PICMG 1.0 CPU card supports LGA 1150 Intel® Core™ i7/i5/i3, Pentium® and Celeron® CPU with Intel® H81, DDR3, VGA, iDP, dual Intel® GbE, PCIe Mini, USB 3.2 Gen 1 (5Gb/s), SATA 6Gb/s, mSATA, RS-232, HD Audio and RoHS
19800-000049-RS	LPT flat cable, 240mm, P=2.54
19800-000075-RS	PS/2 KB/MS cable with bracket, 220mm, P=2.0
19800-010500-200-RS	USB 3.2 Gen 1 (5Gb/s) cable with bracket, 450mm
32102-000100-200-RS	SATA power cable, MOLEX 5264-4P to SATA15P
32200-074800-RS	RS-422/485 cable, 200mm, P=2.0
32205-000702-100-RS	RS-232 cable, 230mm, P=2.54
AC-KIT-892HD-R10	7.1-channel HD Audio kit with Realtek ALC892 supports dual audio streams
CB-USB02-RS	Dual port USB 2.0 cable with bracket, 300mm, P=2.54
CF-1150SB-R11	Special cooler kit for LGA 1150, high-performance compatible, 65W
CF-1150SC-R20	Special cooler kit for LGA 1150, 1U chassis compatible, 65W
CF-1150SE-R11	Special cooler kit for LGA 1150, high-performance compatible, 95W
CF-1150SF-R10	Special cooler kit for LGA 1150, 1U chassis compatible, 54W
DP-DP-R10	DisplayPort to DisplayPort converter board (for IEI iDP connector)
DP-DVI-R10	DisplayPort to DVI-D converter board (for IEI iDP connector)
DP-HDMI-R10	DisplayPort to HDMI converter board (for IEI iDP connector)
DP-LVDS-R10	DisplayPort to LVDS converter board (for IEI iDP connector)
DP-VGA-R10	DisplayPort to VGA converter board (for IEI iDP connector)
TPM-IN01-R20	20-pin Infineon TPM module, software management tool, firmware v3.17

PCI/PX Backplane

Supports PCI and ISA slot on one backplane! For PICMG 1.0 Single Board Computer

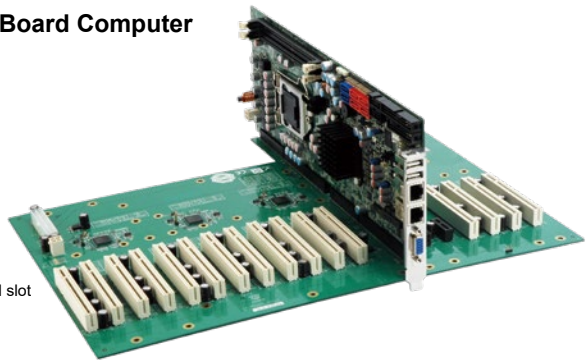

The advantages of using the PICMG 1.0 card are numerous:

1. Supports standard PICMG version 1.0 slot on the PCI/PX series passive backplane

2. Compatible with all available PCI/ISA cards. PCI/PX backplane is also integrated with the ROCKY series card slot

Selection Guide

PAC series wall-mount chassis | 4U/5U rack-mount chassis | 1U/2U rack-mount chassis






Model	PCI-5S2A-RS-R40 PCI-5S2-RS-R40	PCI-6S-RS-R40	PCI-7S-RS-R41	PCI-8S-RS-R40
Total Slot	5	6	7	8
PCI Slot	4	4	4	4
ISA Slot	1	2	3	4
PSU Type	ATX/AT	ATX/AT	ATX/AT	ATX/AT
Chassis	RACK-500G	PAC-106G PAC-1000G	PAC-1700G	N/A





Model	PCI-10S-RS-R41	PX-10S-RS-R50	PCI-12S-RS-R40	PCI-14S-RS-R40
Total Slot	10	10	12	14
PCI Slot	4	7	4	4
ISA Slot	5	3	7	9
PSU Type	ATX/AT	ATX/AT	ATX/AT	ATX/AT
Chassis	PAC-125G	PAC-125G	RACK-3000G	N/A
Note				





Model	PCI-14S3-RS-R40	PX-14S3-RS-R50	PX-14S5-RS-R50
Total Slot	14	14	14
PCI Slot	4	12	7
ISA Slot	9	2	6
PSU Type	ATX/AT	ATX/AT	ATX/AT
Chassis	RACK-305G RACK-360G RACK-3000G	RACK-305G RACK-360G RACK-3000G	RACK-305G RACK-360G RACK-3000G


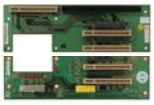
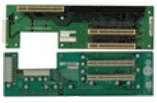
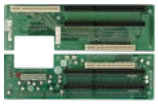

Model	PCI-2SD2-RS-R41	PCI-5SD6-RS-R40	PCI-5SDA-RS-R40	PCI-6SD-RS-R40
Total Slot	2	6	6	6
PCI Slot	R2	L2+R2	L2+R2	L1+R1
ISA Slot				L1+R1
PSU Type	ATX/AT	ATX	ATX/AT	ATX
Chassis	RACK-1150G	RACK-220G	RACK-220G	RACK-220G

PCI-5S2-RS-R40/PCI-5S2A-RS-R40

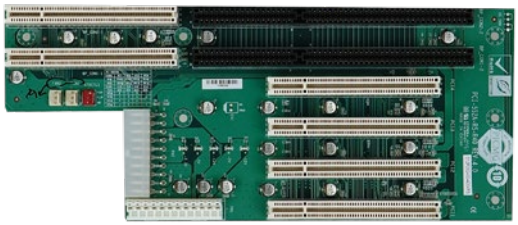

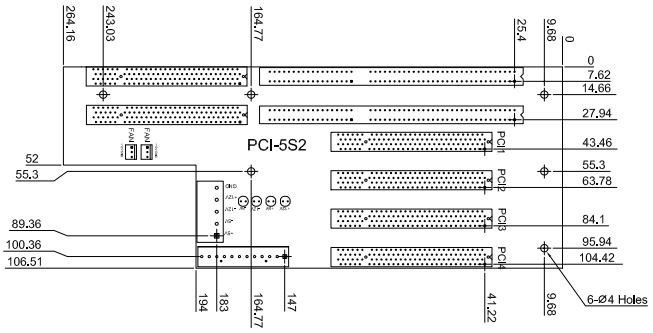

Ordering Information	
PCI-5S2-RS-R40	5-slot AT power backplane with four PCI slots and one ISA slot
PCI-5S2A-RS-R40	5-slot ATX power backplane with four PCI slots and one ISA slot
RACK-500G	5-slot full-size compact chassis

PCI-6S-RS-R40

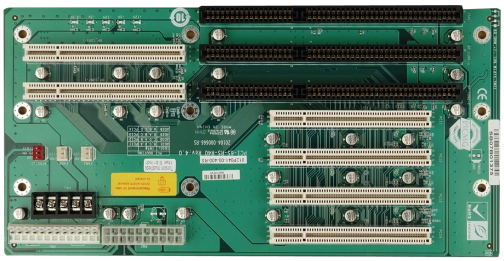

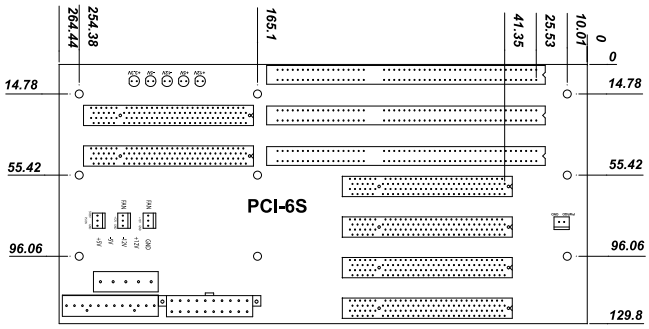

Ordering Information	
PCI-6S-RS-R40	6-slot backplane with four PCI slots and two ISA slots
PAC-106G	6-slot full-size compact chassis
PAC-1000G	6-slot full-size compact chassis

PCI-7S-RS-R41

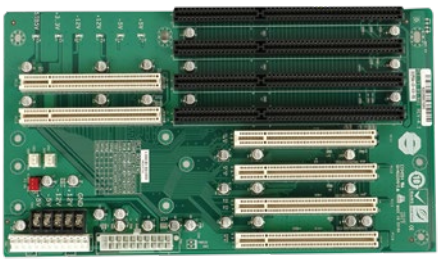

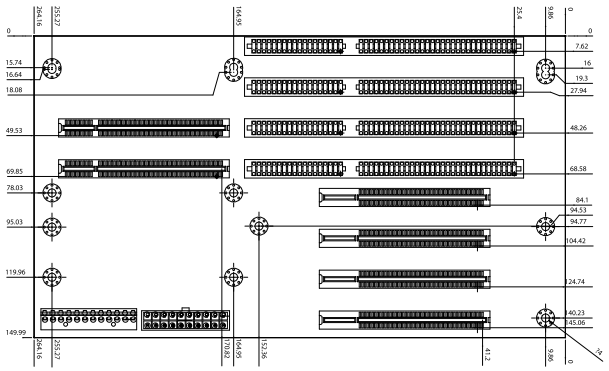

Ordering Information	
PCI-7S-RS-R41	7-slot backplane with four PCI slots and three ISA slots
PAC-1700G	7-slot full-size compact chassis

PCI-8S-RS-R40



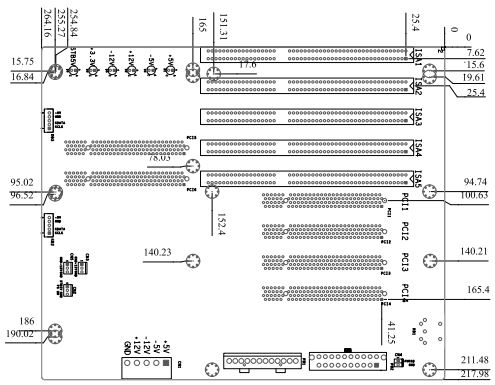

Ordering Information	
PCI-8S-RS-R40	8-slot backplane with four PCI slots and four ISA slots

PCI-10S-RS-R41



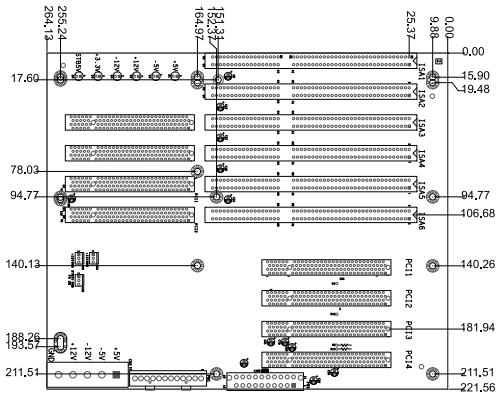

Ordering Information	
PCI-10S-RS-R41	10-slot backplane with four PCI slots and five ISA slots
PAC-125G	10-slot full-size compact chassis

PX-10S-RS-R50



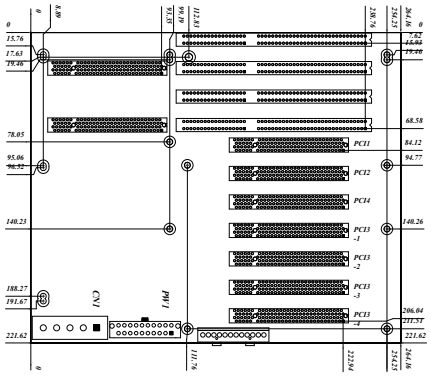

Ordering Information	
PX-10S-RS-R50	10-slot backplane with seven PCI slots and three ISA slots
PAC-125G	10-slot full-size compact chassis

PCI-12S-RS-R40

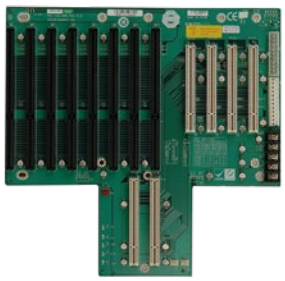

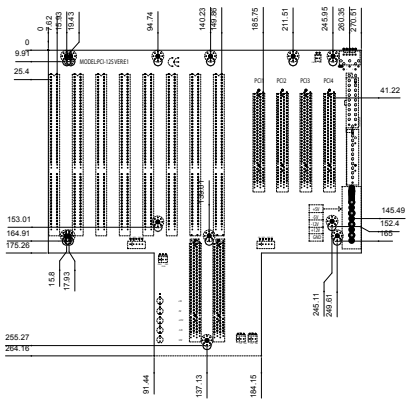

Ordering Information	
PCI-12S-RS-R40	12-slot backplane with four PCI slots and seven ISA slots
RACK-3000G	4U 14-slot full-size rack-mount chassis

PCI-14S-RS-R40

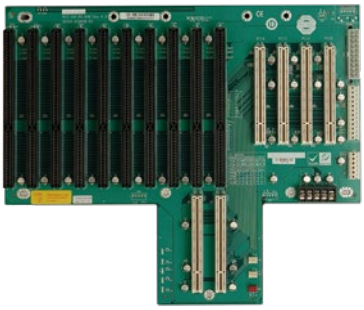

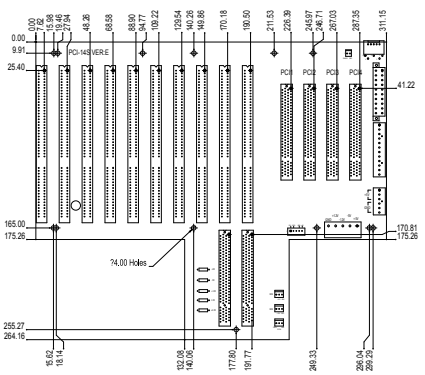

Ordering Information	
PCI-14S-RS-R40	14-slot backplane with four PCI slots and nine ISA slots

PCI-14S3-RS-R40

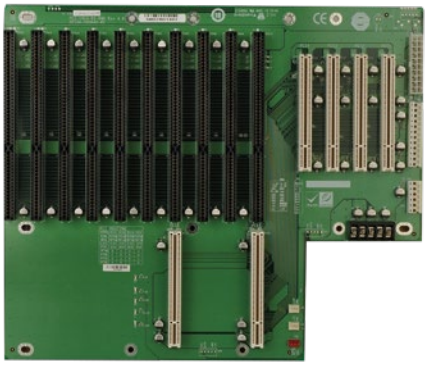

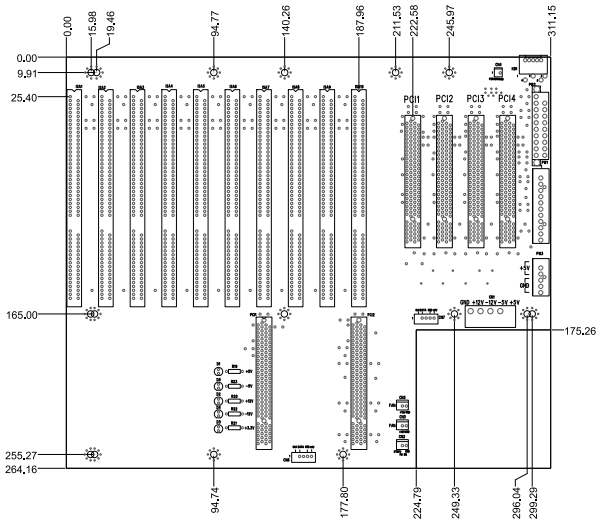

Ordering Information	
PCI-14S3-RS-R40	14-slot backplane with four PCI slots and nine ISA slots
RACK-305G	4U 14-slot full-size rack-mount chassis
RACK-360G	4U 14-slot full-size rack-mount chassis
RACK-3000G	4U 14-slot full-size rack-mount chassis

PX-14S3-RS-R50

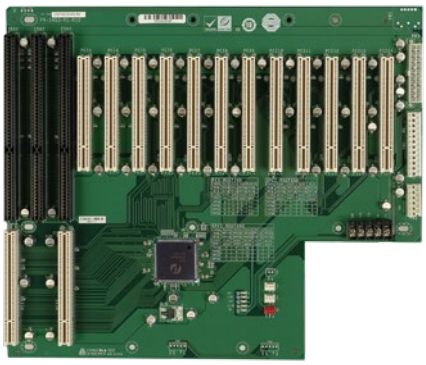

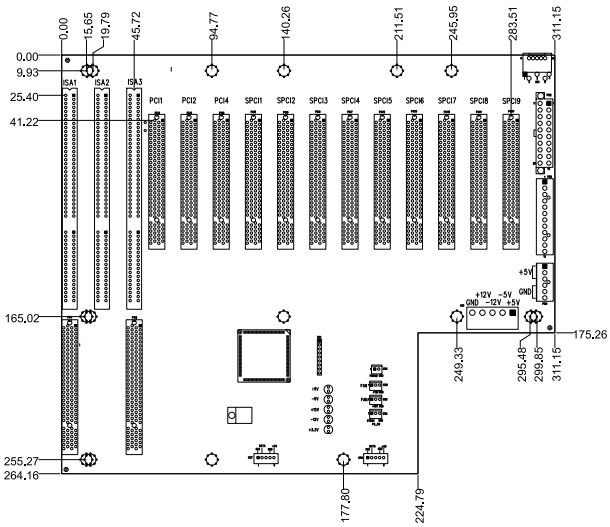

Ordering Information	
PX-14S3-RS-R50	14-slot backplane with twelve PCI slots and two ISA slots
RACK-305G	4U 14-slot full-size rack-mount chassis
RACK-360G	4U 14-slot full-size rack-mount chassis
RACK-3000G	4U 14-slot full-size rack-mount chassis

PX-14S5-RS-R50

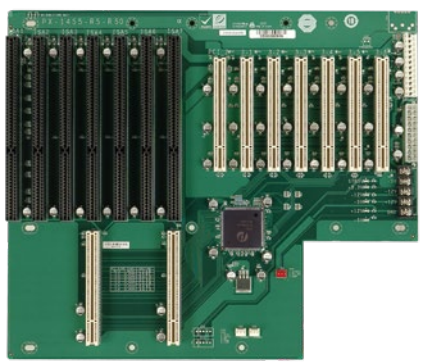

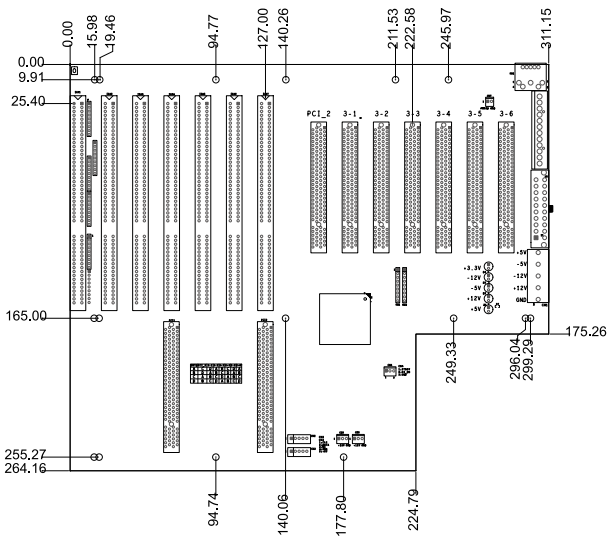

Ordering Information	
PX-14S5-RS-R50	14-slot backplane with seven PCI slots and six ISA slots
RACK-305G	4U 14-slot full-size rack-mount chassis
RACK-360G	4U 14-slot full-size rack-mount chassis
RACK-3000G	4U 14-slot full-size rack-mount chassis

PCI-2SD2-RS-R41

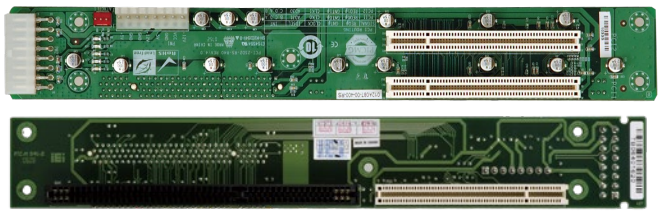

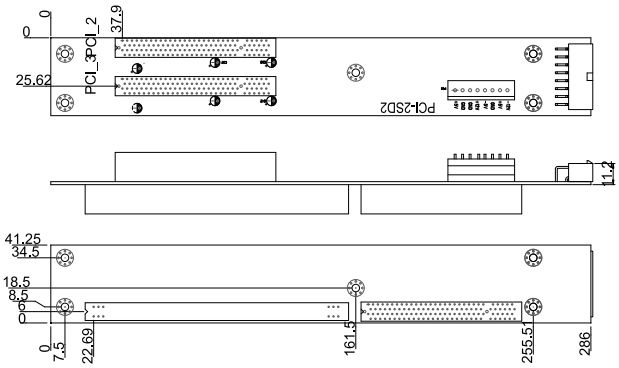

Ordering Information	
PCI-2SD2-RS-R41	1U chassis backplane with two PCI slots
RACK-1150G	1U full-size rack-mount chassis

* The adapter cable 32100-040600-RS is required when connecting PCI-2SD2-RS to a standard ATX supply.

PCI-5SD6-RS-R40 2U Type

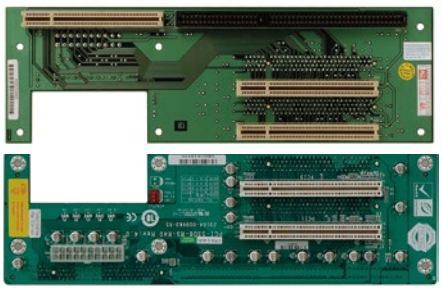

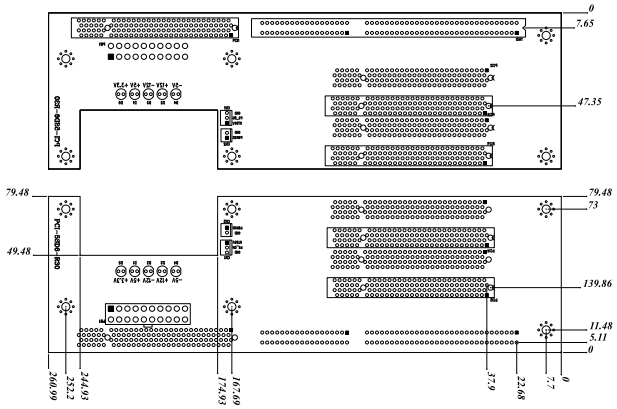

Ordering Information	
PCI-5SD6-RS-R40	2U chassis backplane with four PCI slots
RACK-220G	2U 6-slot full-size rack-mount chassis

PCI-5SDA-RS-R40 2U Type

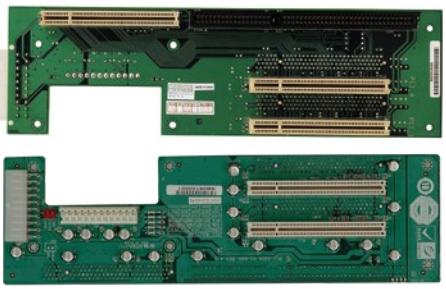

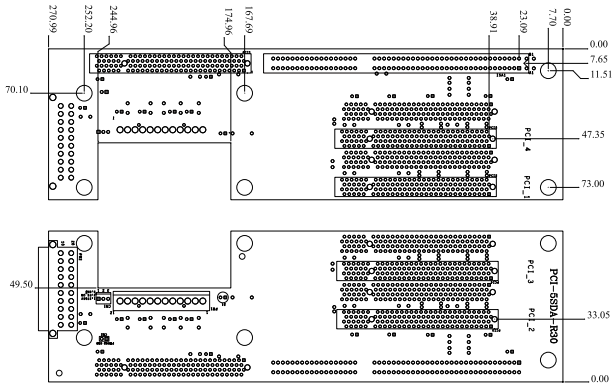

Ordering Information	
PCI-5SDA-RS-R40	2U chassis backplane with four PCI slots
RACK-220G	2U 6-slot full-size rack-mount chassis

PCI-6SD-RS-R40 2U Type

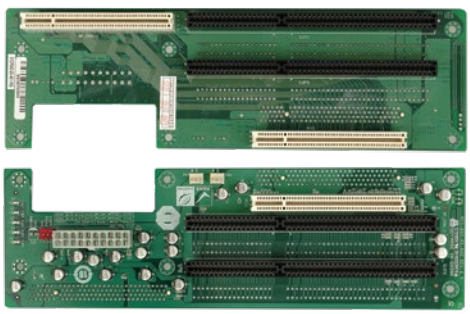

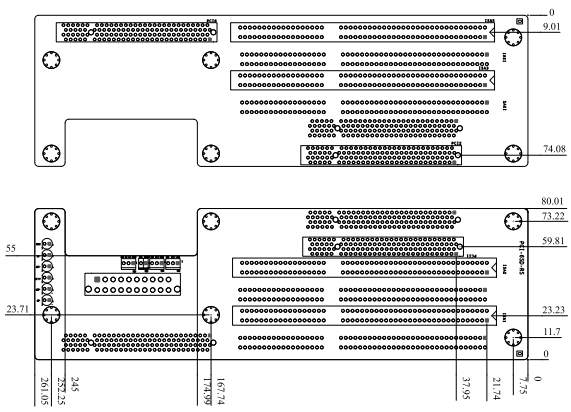

Ordering Information	
PCI-6SD-RS-R40	2U chassis backplane with two PCI slots and two ISA slots
RACK-220G	2U 6-slot full-size rack-mount chassis

Half-size PICOe, ISA Selection Guide

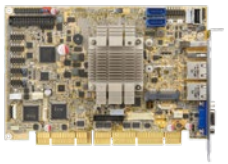



Model Name	PCISA-BT	IOWA-LX
CPU Socket	On board	On board
CPU Type	Intel® Atom™ E3845 on-board SoC (1.91GHz, quad-core, 2MB cache, TDP=10W) Intel® Atom™ E3825 on-board SoC (1.33GHz, dual-core, 1MB cache, TDP=6W)	AMD Geode™ LX600
Chipset	N/A	AMD Geode™ CS5536
Memory	One 204-pin 1066/1333 MHz single-channel DDR3L SDRAM unbuffered DIMM (system max. 8 GB)	On-board 128MB 200/266 MHz DDR SDRAM One 200-pin 200/266 MHz DDR SO-DIMM (system max. 512MB)
Display Interface	Dual display supported 1 x VGA 1 x iDP interface	1 x VGA
Ethernet	LAN1: Intel® I211-AT PCIe controller LAN2: Intel® I211-AT PCIe controller	10/100Mbps Realtek RTL8100C Ethernet controller
I/O Interface	1 x 6-pin wafer for KB/MS 1 x LPT 1 x RS-422/485 2 x RS-232 2 x USB 3.2 Gen 1 8 x USB 2.0	1 x Infrared interface 1 x LPT 1 x PS/2 KB/MS 1 x RS-422/485 2 x RS-232 4 x USB 2.0 (by pin header)
Storage Interface	1 x mSATA (colay SATA2, supports SATA 3Gb/s signal only) 2 x SATA 3Gb/s	1 x CF Type II 1 x FDD 1 x IDE 2 x SATA (RAID 0, 1)
Audio	IEI AC-KIT-888S-R10 7.1-channel HD Audio kit via the on-board 10-pin header connector	Realtek ALC203 with AC'97 codec
Digital I/O	8-bit digital I/O	
Power Consumption	5V@1.55A,12V@0.74A (Intel® Atom™ E3845 1.91GHz CPU, one 8 GB 1600 MHz memory)	5V@1.51A, 5VSb@0.09A (On-board AMD Geode™ LX600 CPU 366 MHz with on-board 128MB 200 MHz DDR memory and 512MB 333 MHz DDR memory)
Watchdog Timer	Software programmable supports 1~255 sec. system reset	
Operation Environment	Temperature Range: -20ºC ~ 60ºC (-4ºF ~ 140ºF) Relative Humidity: 5% ~ 95%, non-condensing	Temperature Range: 0ºC ~ 60ºC (32ºF ~ 140ºF) Relative Humidity: 5% ~ 95%, non-condensing
Expansion Slot	1 x PCIe Mini slot	NA
CPU Cooler	NA	Heatsink (fanless)

PCISA-BT

Half-size PCISA CPU Card supports 22nm Intel® Atom™ On-board SoC with VGA, iDP, Dual Intel® PCIe GbE, USB 3.2 Gen 1 (5Gb/s), PCIe Mini, SATA, mSATA, COM, Audio and RoHS

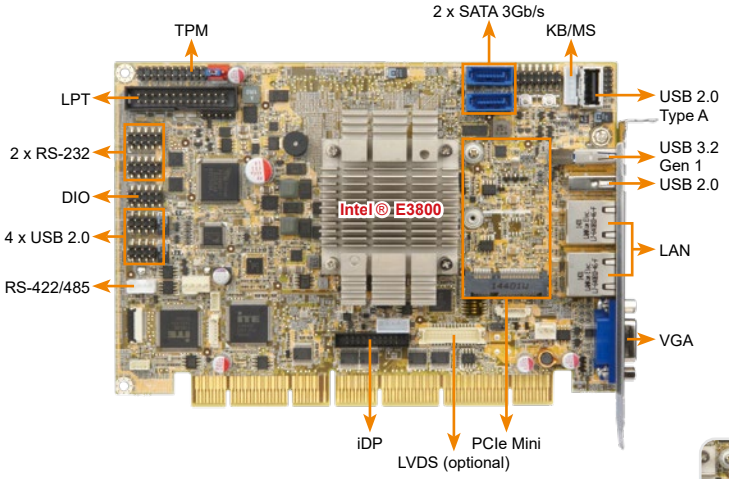

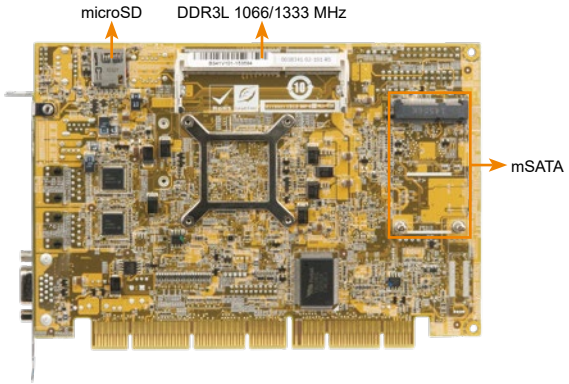



PCIe Mini slot

PCIe Mini slot for full-size or half-size devices

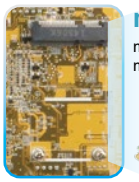

mSATA

mSATA slot for full-size mSATA





Specifications

- SoC
  Intel® Atom™ E3845 on-board SoC (1.91GHz, quad-core, 2MB cache, TDP=10W)
  Intel® Atom™ E3827 on-board SoC (1.75GHz, dual-core, 1MB cache, TDP=8W)
  Intel® Atom™ E3826 on-board SoC (1.46GHz, dual-core, 1MB cache, TDP=7W)
  Intel® Atom™ E3825 on-board SoC (1.33GHz, dual-core, 1MB cache, TDP=6W)
  Intel® Atom™ E3815 on-board SoC (1.46GHz, single-core, 512KB cache, TDP=5W)
- Memory
  One 204-pin 1333/1066 MHz single-channel DDR3L SDRAM unbuffered SO-DIMM slot supports up to 8GB
- Graphics Engine
  Intel® HD Graphics Gen 7 Engines with 4 execution units, supporting DX11.1, OpenGL 4.2 and OpenCL1.2
- Display Output
  Dual independent display
  1 x VGA (up to 2560x1600@60Hz)
  1 x 18/24-bit dual-channel LVDS (up to 1920x1200@60Hz) (optional, MOQ: 100 pcs/lot)
  1 x iDP interface for HDMI, LVDS, VGA, DVI, DP (up to 2560x1600@60Hz)
- Ethernet
  LAN1: Intel® I211-AT PCIe controller
  LAN2: Intel® I211-AT PCIe controller
- External I/O Interface
  1 x USB 2.0
  1 x USB 3.2 Gen 1 (5Gb/s)
- Internal I/O Interface

1 x KB/MS (1x6 pin)	1 x USB 2.0 (180° Type-A)
1 x LPT (2x13 pin)	2 x RS-232 (2x5 pin, P=2.54)
1 x mSATA	2 x SATA 3Gb/s
1 x RS-422/485 (1x4 pin, P=2.0)	4 x USB 2.0 (2x4 pin, P=2.54)

- Audio
  Support 7.1 channel HD Audio by IEI AC-KIT-888S-R10 kit
  1 x Front Audio (2x5 pin)
- TPM
  1 x TPM (2x10 pin)
- SMBus
  1 x SMBus (1x4 pin)
- I²C
  1 x I²C (1x4 pin)
- Infrared Interface
  1 x Infrared interface (1x5 pin)
- Expansion
  1 x microSD socket
  1 x PCIe Mini slot
  PCI and ISA signal via golden finger
- Watchdog Timer
  Software programmable supports 1~255 sec. system reset
- Digital I/O
  8-bit digital I/O (2x5 pin)
- Fan Connector
  1 x CPU smart fan (1x4 pin)
  1 x System smart fan (1x3 pin)
- Power Supply
  5V/12V, AT/ATX support
- Power Consumption
  5V@1.55A,12V@0.74A (Intel® Atom™ E3845 1.91GHz CPU with one 8 GB 1333 MHz memory)
- Operating Temperature
  -20°C ~ 60°C
- Storage Temperature
  -30°C ~ 70°C
- Dimensions
  185 mm x 128 mm
- Weight
  GW: 1000g / NW: 250g
- CE/FCC compliant

Features

- Half-size PCISA CPU card supports 22nm Intel® Atom™ or Celeron® on-board SoC
- Supports dual LAN by Intel® I211-AT PCIe controllers
- Supports 1.35 V 1333/1066 MHz DDR3L SDRAM up to 8 GB
- Supports dual independent display with one analog CRT, iDP and one 24-bit dual-channel LVDS (optional)
- COM, USB 3.2 Gen 1 (5Gb/s), SATA 3Gb/s, PCIe Mini, mSATA and HD Audio support

Packing List

1 x PCISA-BT single board computer	
1 x SATA cable	1 x QIG

Ordering Information

Part No.	Description
PCISA-BT-E38451-R11	Half-size PCISA CPU card supports Intel® Atom™ E3845 (10W) on-board SoC with VGA, iDP, dual Intel® PCIe GbE, PCIe Mini, USB 3.2 Gen 1 (5Gb/s), SATA, mSATA, COM, Audio and RoHS
PCISA-BT-E38251-R11	Half-size PCISA CPU card supports Intel® Atom™ E3825 (6W) on-board SoC with VGA, iDP, dual Intel® PCIe GbE, PCIe Mini, USB 3.2 Gen 1 (5Gb/s), SATA, mSATA, COM, Audio and RoHS
19800-000049-RS	LPT flat cable, 240mm, P=2.54
19800-000075-RS	PS/2 KB/MS cable with bracket, 220mm, P=2.0
19800-020100-100-RS	RS-232 cable with bracket, Dual 10-pin to dual DB-9, 230mm, P=2.54
32102-000100-200-RS	SATA power cable, MOLEX 5264-4P to SATA15P
32205-003800-300-RS	RS-422/485 cable, 200mm, P=2.0
AC-KIT-892HD-R10	Realtek ALC892 7.1-channel HD Audio peripheral board
DP-DP-R10	DisplayPort to DisplayPort converter board (for IEI iDP connector)
DP-DVI-R10	DisplayPort to DVI-D converter board (for IEI iDP connector)
DP-HDMI-R10	DisplayPort to HDMI converter board (for IEI iDP connector)
DP-LVDS-R10	DisplayPort to LVDS converter board (for IEI iDP connector)
DP-VGA-R10	DisplayPort to VGA converter board (for IEI iDP connector)
TPM-IN01-R20	20-pin Infineon TPM module, software management tool, firmware v3.17

Note: Models with other CPUs not listed in the table are requested by MOQ - 100 pcs/lot.

IP/IPX Series Backplane

Supports PCI and ISA slot on one backplane!
For half-size PCISA series single board computers

The advantages of using the PCISA card are numerous:

1. Supports standard PISA version 1.0 slot on the IP/IPX series passive backplane.
2. Compatible with all available PCI/ISA cards. IP/IPX backplane is also integrated with the PCISA series card slot.

Selection Guide

PAC series wall-mount chassis 4U rack-mount chassis

RoHS Ready









Model	IP-3S-RS	IP-4S-RS	IP-4S4-RS	IP-5SA2-RS
Total Slot	3	4	4	5
PCI Slot	2	3		4
ISA Slot			3	
PSU Type	AT	AT	AT	ATX
Chassis	PAC-53GH	PAC-400G PAC-42GH	PAC-400G PAC-42GH	PR-1500G

RoHS Ready



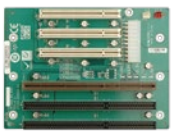

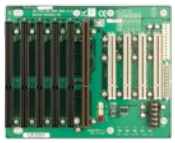



Model	IP-6S-RS	IP-6SA-RS	IP-10S-RS	IPX-13S-RS
Total Slot	6	6	10	13
PCI Slot	3	3	4	12
ISA Slot	2	2	5	
PSU Type	AT	ATX	ATX/AT	ATX/AT
Chassis	PAC-1000G	PAC-106G PAC-1000G	PAC-125G	RACK-305G RACK-360G RACK-3000G

IP-3S-RS-R40

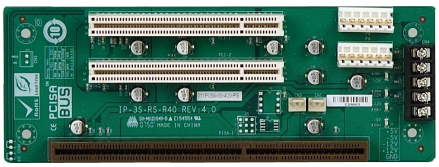

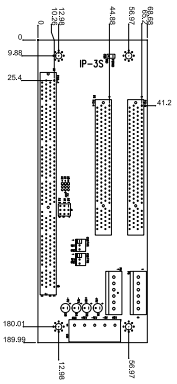

Ordering Information	
IP-3S-RS-R40	3-slot backplane with two PCI slots
PAC-53GH	3-slot half-size compact chassis

IP-4S-RS-R40

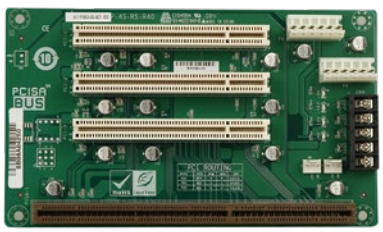

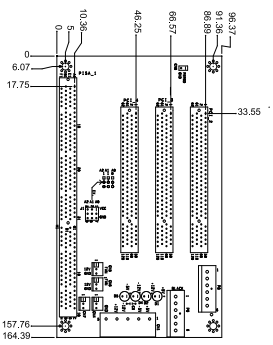

Ordering Information	
IP-4S-RS-R40	4-slot backplane with three PCI slots
PAC-400G	4-slot half-size compact chassis
PAC-42GH	4-slot half-size compact chassis

IP-4S4-RS-R40

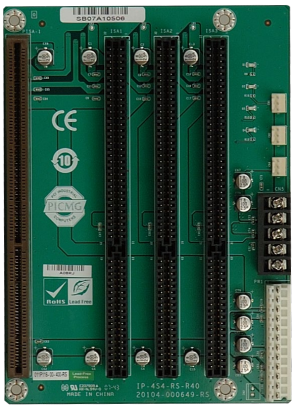

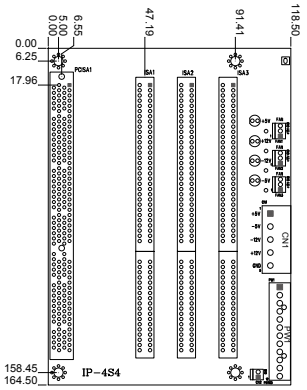

Ordering Information	
IP-4S4-RS-R40	4-slot backplane with three ISA slots
PAC-400G	4-slot half-size compact chassis
PAC-42GH	4-slot half-size compact chassis

IP-6SA-RS-R40

ATX power

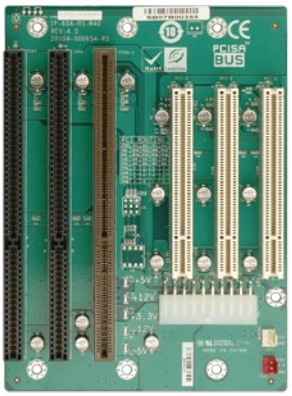

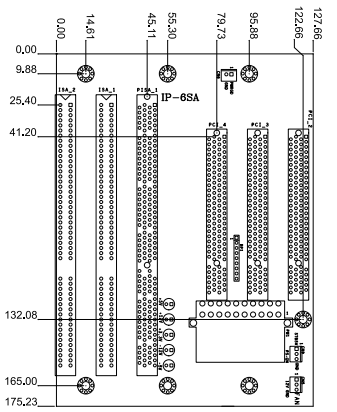

Ordering Information	
IP-6SA-RS-R40	6-slot backplane with three PCI slots and two ISA slots
PAC-106G	6-slot full-size compact chassis
PAC-1000G	6-slot full-size compact chassis

IP-5SA2-RS-R40

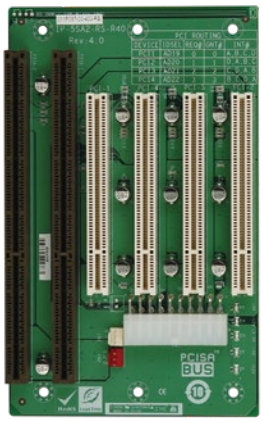

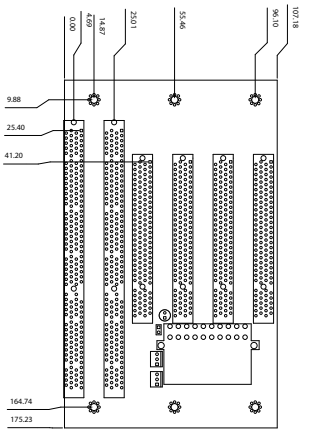

Ordering Information	
IP-5SA2-RS-R40	5-slot backplane with four PCI slots
PR-1500G	5-slot half-size compact chassis

IP-10S-RS-R40

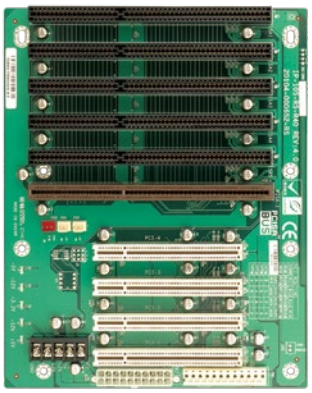

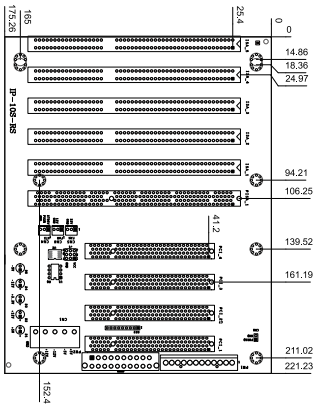

Ordering Information	
IP-10S-RS-R40	10-slot backplane with four PCI slots and five ISA slots
PAC-125G	10-slot full-size compact chassis

IP-6S-RS-R40

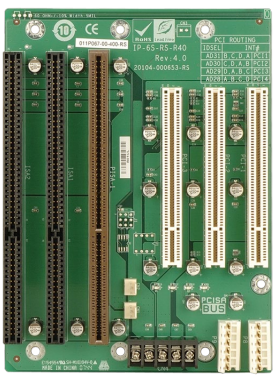

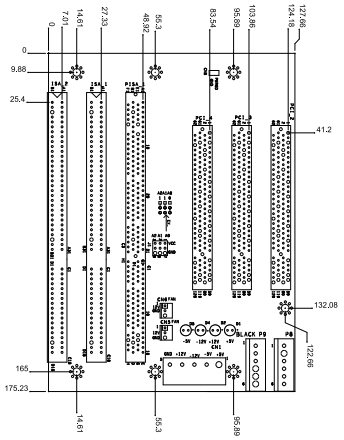

Ordering Information	
IP-6S-RS-R40	6-slot backplane with three PCI slots and two ISA slots
PAC-1000G	6-slot full-size compact chassis

IPX-13S-RS-R40

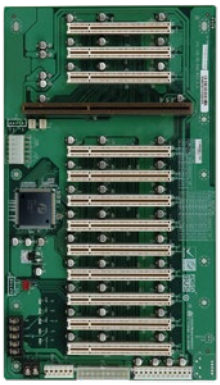

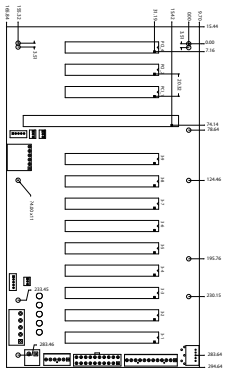

Ordering Information	
IPX-13S-RS-R40	13-slot backplane with twelve PCI slots
RACK-305G	4U 14-slot rack-mount chassis
RACK-360G	4U 14-slot rack-mount chassis
RACK-3000G	4U 14-slot rack-mount chassis

IOWA-LX

Half-size Pure ISA CPU Card with On-board AMD Geode™ LX600 Processor (366 MHz), 128KB L2 cache, On-board 128MB Memory, VGA, LAN, USB 2.0, CF, COM, LPT, Audio and RoHS

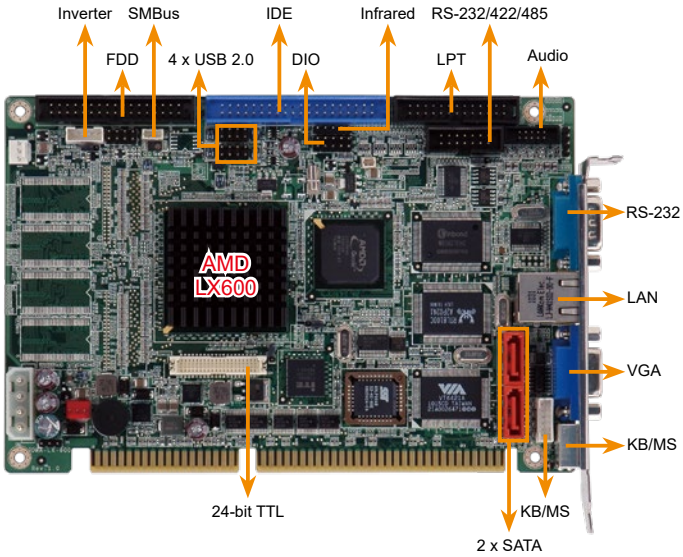

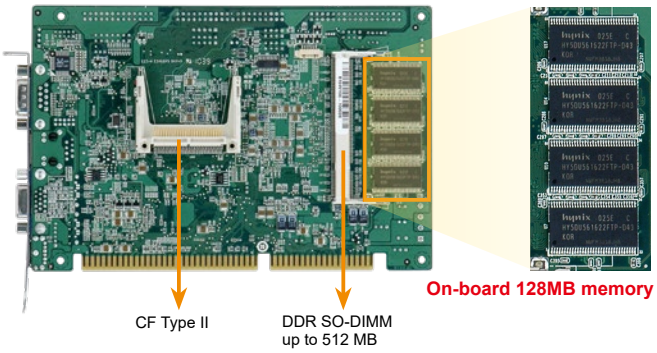

Performance Comparison Chart

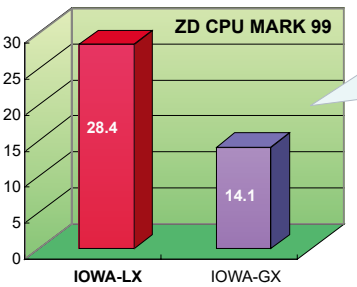

IOWA-LX platform can easily replace the IOWA-GX platform without any impact to the system for increased levels of performance.

AMD Geode™ | Fanless | Hi-Speed USB 2.0

Specifications

- CPU
  On-board AMD Geode™ LX600 processor (366 MHz), 128KB L2 cache
- Chipset
  AMD Geode™ CS5536
- BIOS
  Award BIOS
- Memory
  One 200-pin 266/200 MHz DDR SDRAM SO-DIMMs supports up to 512MB
  On-board 128MB DDR 266/200 MHz memory
- Graphics Engine
  VGA integrated in the AMD Geode™ LX600
- Display Output
  Single HD VOP 2.0 output
  1 x VGA (up to 1920x1440)
  1 x TFT (up to 1600x1200)
- External I/O Interface
  1 x KB/MS 1 x RS-232
- Internal I/O Interface
  1 x CF Type II 1 x RS-232/422/485 (2x7 pin, P=2.54)
  1 x FDD (2x17 pin) 1 x LPT (2x13 pin)
  1 x IDE (2x10 pin) 4 x USB 2.0 (2x4 pin, P=2.54)
  2 x SATA (RAID 0/1 supported on IOWA-LX-600S-R10)
- Ethernet
  10/100Mbps Realtek RTL8100C Ethernet controller
- Audio
  Realtek ALC203 with AC'97 codec
  1 x Front audio (2x5 pin)
- Expansion
  ISA bus supported via golden finger
- Digital I/O
  8-bit digital I/O (2x5 pin)
- Infrared Interface
  1 x Infrared Interface (1x5 pin)
- Watchdog Timer
  Software programmable supports 1~255 sec. system reset
- FAN connctor
  1 x Smart fan (1x3 pin)
- Power supply
  5V/12V, AT/ATX support
- Power Consumption
  5V@1.51A, 5VSb@0.09A
  (On-board AMD Geode™ LX 600 CPU 366 MHz with 128MB 200 MHz on-board DDR memory and 512MB 333 MHz DDR memory)
- Operating Temperature
  -10ºC ~ 60ºC
- Storage Temperature
  -20°C ~ 70°C
- Operating Humidity
  5% ~ 95%, non-condensing
- Weight
  GW: 1000g / NW: 250g
- CE/FCC compliant

Features

- ISA CPU card with on-board AMD Geode™ LX600 processor (366 MHz), 128KB L2 cache
- Flexible on-board DDR SDRAM and one SO-DIMM slot
- Enchanced TTL, RS-232, RS-422/485 and USB 2.0 interfaces for extened connectivities

Packing List

1 x IOWA-LX-600 single board computer
1 x Audio cable
1 x IDE flat cable
1 x KB/MS Y cable
1 x USB cable
1 x Mini jumper pack
1 x QIG

Ordering Information

Part No.	Description
IOWA-LX-600-R10	Half-size pure ISA CPU card with on-board AMD Geode™ LX600 processor (366 MHz), 128KB L2 cache, on-board 128MB memory VGA, LAN, USB 2.0, COM, CF, LPT, audio and RoHS
IOWA-LX-600S-R10	Half-size pure ISA CPU card with on-board AMD Geode™ LX600 processor (366 MHz), 128KB L2 cache, on-board 128MB memory VGA, LAN, USB 2.0, SATA, CF, COM, LPT, Audio and RoHS
19800-000049-RS	LPT flat cable, 240mm, P=2.54
19800-004400-200-RS	RS-232 & RS-422/485 cable with bracket, 14-pin to two DB-9, 255mm, P=2.54
32801-000703-500-RS	SATA (7-pin to 7-pin) cable, 500mm
32200-000017-RS	FDD Cable, 520mm, P=2.54

BP Series Backplane

Selection Guide

PAC series wall-mount chassis 4U rack-mount chassis

RoHS Ready







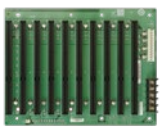

Model	BP-3S-RS-R40	BP-4S-RS-R40	BP-5S-RS-R40	BP-6S-RS-R40	BP-7S-RS-R40	BP-8S-RS-R41	BP-10S-RS-R40
Total Slot	3	4	5	6	7	8	10
ISA Slot	3	4	5	6	7	8	10
PSU Type	AT	AT	AT	AT	AT	AT	AT
Chassis	PAC-53GH	PAC-400G PAC-42GH	PR-1500G	PAC-106G PAC-1000G	PAC-700G PAC-1700G	N/A	PAC-125G

BP-3S-RS-R40

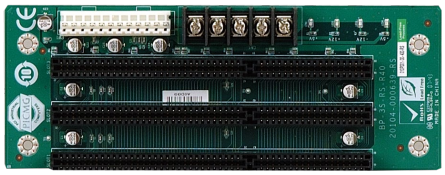

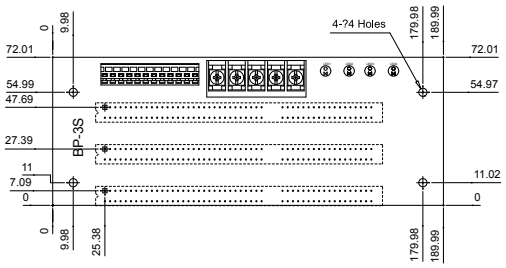

Ordering Information	
BP-3S-RS-R40	3-slot backplane with three ISA slots
PAC-53GH	3-slot half-size compact chassis

BP-4S-RS-R40

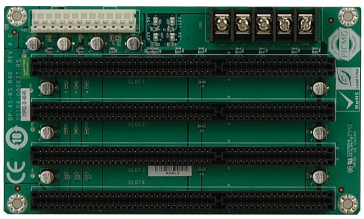

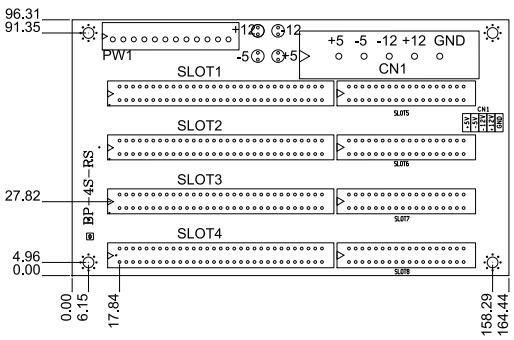

Ordering Information	
BP-4S-RS-R40	4-slot backplane with four ISA slots
PAC-400G	4-slot half-size compact chassis
PAC-42GH	4-slot half-size compact chassis

BP-5S-RS-R40

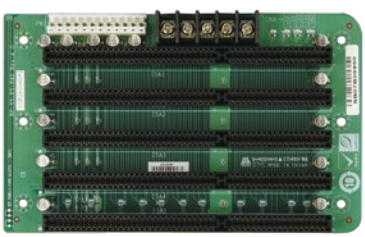

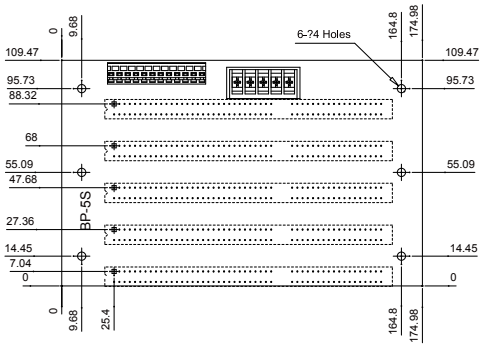

Ordering Information	
BP-5S-RS-R40	5-slot backplane with five ISA slots
PR-1500G	5-slot half-size compact chassis

BP-6S-RS-R40



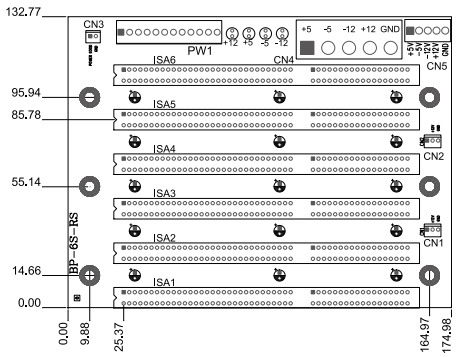

Ordering Information	
BP-6S-RS-R40	6-slot backplane with six ISA slots
PAC-106G	6-slot full-size compact chassis
PAC-1000G	6-slot full-size compact chassis

BP-7S-RS-R40

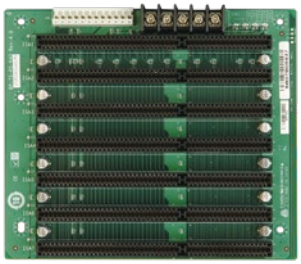

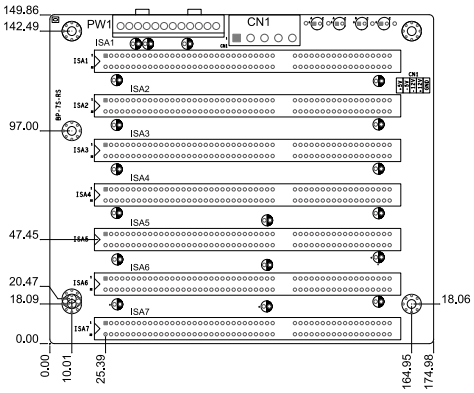

Ordering Information	
BP-7S-RS-R40	7-slot backplane with seven ISA slots
PAC-700G	7-slot half-size compact chassis
PAC-1700G	7-slot full-size compact chassis

BP-8S-RS-R41

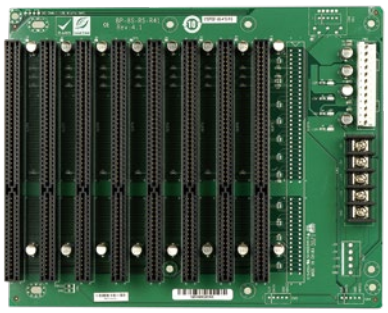

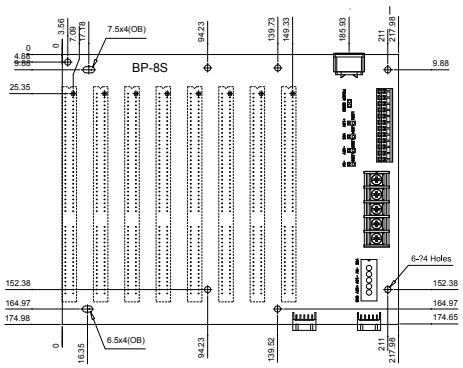

Ordering Information	
BP-8S-RS-R41	8-slot backplane with eight ISA slots

BP-10S-RS-R40



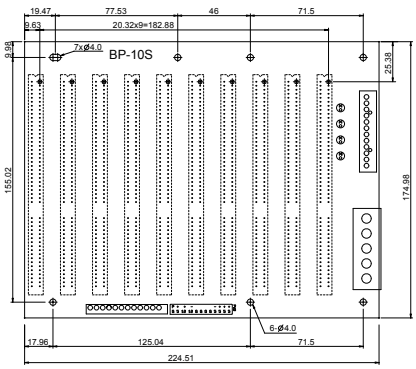

Ordering Information	
BP-10S-RS-R40	10-slot backplane with ten ISA slots
PAC-125G	10-slot full-size compact chassis

AC-KIT-888S

Realtek ALC888S 7.1 Channel HD Audio Peripheral Board, RoHS

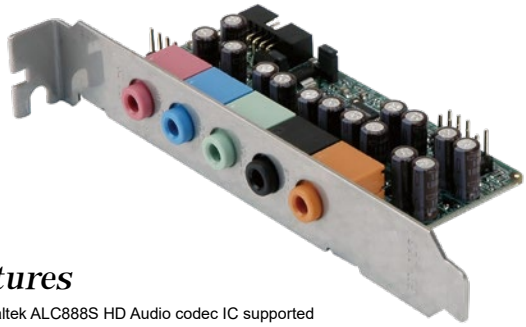

Dimensions (Unit: mm)

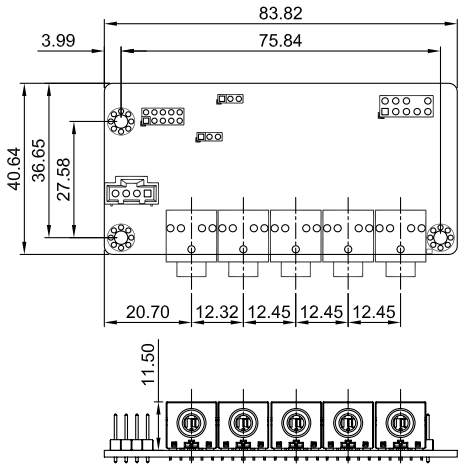

Features

- Realtek ALC888S HD Audio codec IC supported
- Five audio jacks for microphone, 7.1+2-channel high definition audio input and output
- High performance 7.1+2-channel high definition audio board provides 7.1-channel sound playback and multiple streaming through the front panel stereo outputs
- Digital to Analog Converter (DAC) with 97dB Signal to Noise Ratio (SNR)
- Analog to Digital Converter (ADC) with 90dB Signal to Noise Ratio (SNR)
- All the Digital to Analog Converter (DAC) supports 44.1k/48k/96k/192kHz sampling rate
- All the Analog to Digital Converter (ADC) supports 44.1k/48k/88.2k/96k/192kHz sample rate
- Driver supports Windows® 2000/2003/XP/Vista/7/10 (32/64 bits) and Linux (Ubuntu or Debian)
- CE/FCC compliant

Packing List

1 x AC-KIT-888S audio peripheral board	
1 x Audio cable	1 x QIG

Ordering Information

AC-KIT-888S-R10	Realtek ALC888S 7.1 Channel HD Audio peripheral board, RoHS
32107-001100-100-RS	Audio cable with length of 200 mm, 2x5 pin, pitch=2.0 mm

AC-KIT08R

Audio Converter Card via Realtek ALC655 AC'97 5.1-Channel Audio Daughter Board, RoHS

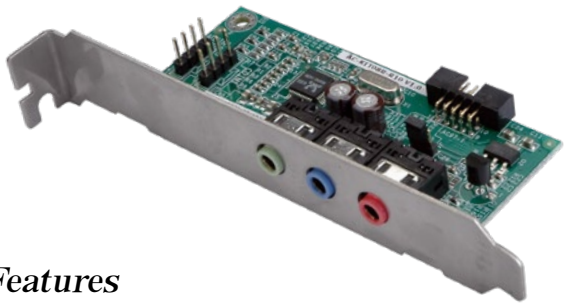

Dimensions (Unit: mm)

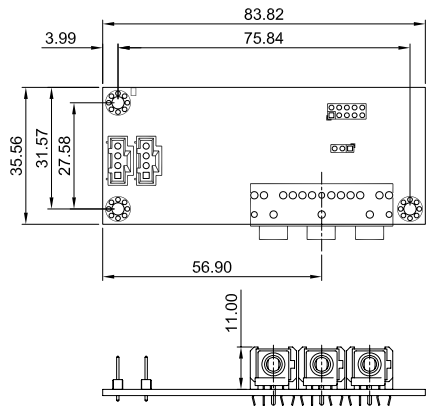

Features

- Realtek ALC655 AC'97 audio codec IC supported
- Three audio jacks for microphone, 5.1-channel AC'97 audio input and output
- Full duplex AC'97 2.3 compatible 5.1-channel audio codec designed for PC multimedia system
- Supports double sampling rate (96kHz) of DVD audio playback
- Driver supports Windows® 2000/2003/XP/VISTA/7 (32/64 bits) and Linux (Ubuntu or Debian)
- CE/FCC compliant

Packing List

1 x AC-KIT08R audio peripheral board	
1 x Audio cable	1 x QIG

Ordering Information

AC-KIT08R-R10	Realtek ALC655 AC'97 5.1-channel audio peripheral board
32107-001100-100-RS	Audio cable with length of 200 mm, 2x5 pin, pitch=2.0 mm

IO-KIT-001-R20

DVI and 4 x USB 1.1/2.0 Translation Daughter Board with Bracket, RoHS

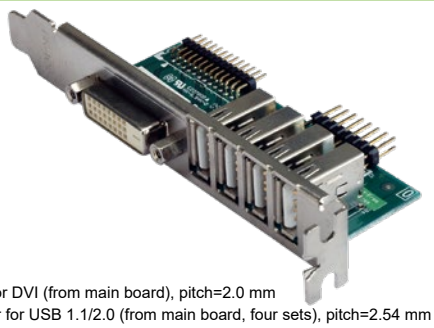

Dimensions (Unit: mm)

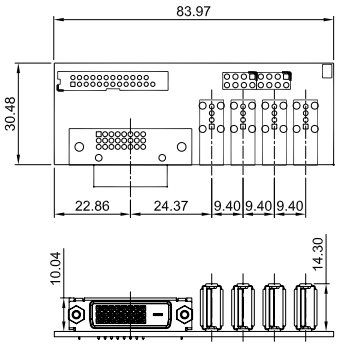

Features

- 26-pin header for DVI (from main board), pitch=2.0 mm
- 2 x 8-pin header for USB 1.1/2.0 (from main board, four sets), pitch=2.54 mm
- DVI-D connector on edge
- Four USB 1.1/2.0 connectors on edge
- CE/FCC compliant

Packing List

1 x IO-KIT-001-R20 (DVI and four USB 1.1/2.0 translation daughter board)
1 x DVI cable
1 x USB cable
1 x QIG

Ordering Information

IO-KIT-001-R20	DVI and four USB 1.1/2.0 translation daughter board
32001-009900-100-RS	USB cable with length of 200 mm, 2 x 8-pin, pitch=2.54 mm
32104-000100-100-RS	DVI cable with length of 200 mm, 2 x 13-pin, pitch=2.0 mm

Industrial Motherboard Selection Guide











Model Name	IMBA-X570	IMBA-W480	IMBA-Q470	IMBA-C2460	IMBA-Q370
CPU Socket	AMD AM4	LGA1200	LGA1200	LGA1151	LGA1151
CPU Type	AMD Ryzen™ 5000/4000/3000 series with Radeon™ Vega Graphics processor	10th generation Intel® Xeon® W, Core™ i9/i7/5/i3/Pentium® and Celeron® processor	10th generation Intel® Core™ i9/i7/5/i3/Pentium® and Celeron® processor	8th/9th generation Intel® Xeon® E, Core™ i9/i7/5/i3/Pentium® and Celeron® processor	8th/9th generation Intel® Xeon® E, Core™ i9/i7/5/i3/Pentium® and Celeron® processor
Chipset	AMD X570	Intel® W480E	Intel® Q470E	Intel® C246	Intel® Q370
Memory	Four 288-pin 2666/2400 MHz Dual-Channel DDR4 SDRAM Unbuffered DIMMs (ECC mode support varies by CPU) (system Max. 128 GB)	Four 288-pin 2933 MHz Dual-Channel DDR4 SDRAM Unbuffered DIMMs (ECC&non-ECC support) (system Max. 128 GB)	Four 288-pin 2933 MHz Dual-Channel DDR4 SDRAM Unbuffered DIMMs (system Max. 128 GB)	Four 288-pin 2666/2400 MHz dual channel DDR4 SDRAM unbuffered DIMMs (ECC&non-ECC support) (system Max. 64 GB)	Four 288-pin 2133 MHz dual-channel DDR4 SDRAM unbuffered DIMMs (system Max. 64 GB)
Display Interface	Triple independent display 1 x VGA 1 x HDMI 1 x DisplayPort	Triple independent display 1 x VGA 1 x DisplayPort 1 x HDMI 1 x Internal 180° Type-C DP	Triple independent display 1 x VGA 1 x DisplayPort 1 x HDMI 1 x Internal 180° Type-C DP	Triple independent display 1 x HDMI 2.0 1 x DVI-I 1 x iDP interface	Triple independent display support 1 x HDMI 2.0 1 x DVI-I 1 x iDP interface
Ethernet	LAN1: Intel® I225V 2.5GbE controller LAN2: Intel® I225V 2.5GbE controller	LAN1: Intel® I225V 2.5GbE controller LAN2: Intel® I225V 2.5GbE controller	LAN1: Intel® I225V 2.5GbE controller LAN2: Intel® I225V 2.5GbE controller	LAN1: Intel® I210-AT PCIe controller with NCSI support LAN2: Intel® I219LM with Intel® AMT 11.0 support	LAN1: Intel® I210-AT PCIe controller with NCSI support LAN2: Intel® I219LM with Intel® AMT 11.0 support
iRIS Remote Management Module	N/A				
I/O Interface	2 x KB/MS 2 x RS-232/422/485 (RS-485 support AFC) 2 x USB 3.2 (Gen1 Type A+1 type C) 5 x RS-232 6 x USB 2.0 8 x USB 3.2 Gen1	1 x 422/485 (RS-485 support AFC) 1 x RS-232/422/485 (RS-485 support AFC) 2 x PS/2 KB/MS 2 x USB 3.2 Gen2 4 x RS-232 4 x USB 3.2 Gen1 8 x USB 2.0	1 x 422/485 (RS-485 support AFC) 1 x RS-232/422/485 (RS-485 support AFC) 2 x PS/2 KB/MS 2 x USB 3.2 Gen2 4 x RS-232 4 x USB 3.2 Gen1 8 x USB 2.0	1 x LPT 1 x PS/2 KB/MS 2 x RS-232/422/485 (RS-485 support AFC) 4 x RS-232 4 x USB 2.0 8 x USB 3.2	1 x PS/2 KB/MS 1 x LPT 2 x RS-232/422/485 4 x RS-232 4 x USB 2.0 8 x USB 3.2
Storage Interface	4 x SATA 6Gb/s (RAID 0/1/5/10 supported) 1 x M.2 (M Key)	4 x SATA 6Gb/s (RAID 0/1/5/10 supported) 1 x M.2 (M Key)	4 x SATA 6Gb/s (RAID 0/1/5/10 supported) 1 x M.2 (M Key)	6 x SATA 6Gb/s (RAID 0/1/5/10 supported) 1 x M.2 (M Key)	6 x SATA 6Gb/s (RAID 0/1/5/10 supported)
Audio	Realtek ALC888S HD Audio codec				
Digital I/O	8-bit programmable I/O (8-bit GPIO is for programming I/O)				
Power Consumption	TBD	TBD	TBD	3.3V@0.38A, 5V@9.38A, 12V@6.23A, 5VSB@0.16A (Intel® Core™ I5-8500 3.0 GHz CPU with four 16 GB 2400 MHz DDR4 memory)	3.3V@1.65A, 5V@3.4A, 12V@8.58A, 5VSV@3.4A (Intel® Core® i7-8700K up to 4.60 GHz CPU with 32GB 2600MHz DDR4 memory)
Watchdog Timer	Software programmable and supports 1~255 sec. system reset				
Operation Environment	Temperature Range: -20°C ~ 60°C (-4°F ~ 140°F) Relative Humidity: 5% ~ 95%, non-condensing				
Expansion Slot	1 x M.2 (M Key) 1 x M.2 (A Key) 2 x PCIe x16 (Gen4) x16 & x8 signal 2 x PCIe x4 (Gen4) x4 & x1 signal 2 x PCI slot	1 x M.2 (A Key) 1 x M.2 (M Key) 1 x PCIe x16 (Gen3) 3 x PCIe x4 (Gen3) 3 x PCI	1 x M.2 (A Key) 1 x M.2 (M Key) 1 x PCIe x16 (Gen3) 3 x PCIe x4 (Gen3) 3 x PCI	1 x M.2 (A Key) 1 x M.2 (M Key) 2 x PCIe x8 (Gen3) 3 x PCIe x4 (Gen3) 2 x PCI slot	1 x M.2 (A key) 1 x M.2 (M Key) 2 x PCIe x8 (Gen3) 3 x PCIe x4 (Gen3) 2 x PCI slot
CPU Cooler	TBD	TBD	TBD	CF-115XA-R10 CF-115XC-R10 CF-115XD-R10 CF-115XE-R10	CF-115XA-R10 CF-115XC-R10 CF-115XD-R10 CF-115XE-R10

Industrial Motherboard Selection Guide








Model Name	IMBA-H310	IMBA-C2360-i2	IMBA-Q170-i2	IMBA-H112	IMBA-H110
CPU Socket	LGA1151	LGA1151	LGA1151	LGA1151	LGA1151
CPU Type	8th/9th generation Intel® Core™ i9/i7/5/i3/Pentium® and Celeron® processor	Intel® Xeon® E3, Core™ i3, Pentium®, Celeron® processor	6th generation Intel® Core™ i7/ i5/i3 Pentium® and Celeron® processor	6th generation Intel® Core™ i7/ i5/i3, Celeron® and Pentium® processor	6th generation Intel® Core™ i7/ i5/i3, Celeron® and Pentium® processor
Chipset	Intel® H310	Intel® C236	Intel® Q170	Intel® H110	Intel® H110
Memory	Four 288-pin 2666/2400 MHz dual channel DDR4 SDRAM unbuffered DIMMs (ECC&non-ECC support) (system Max. 64 GB)	Four 288-pin 2133 MHz dualchannel DDR4 SDRAM unbuffered DIMMs (ECC&non-ECC support) (system Max. 64 GB)	Four 288-pin 2133 MHz dual-channel DDR4 SDRAM unbuffered DIMMs (system Max. 64 GB)	Two 288-pin 2133 MHz dual-channel DDR4 SDRAM unbuffered DIMMs (system Max. 64 GB)	Two 288-pin 2133 MHz dual-channel DDR4 SDRAM unbuffered DIMMs (system Max. 64 GB)
Display Interface	Triple independent display 1 x DVI-D 1 x VGA 1 x Internal 180º Type-C DP	Triple independent display support 1 x HDMI 2.0 1 x DVI-D 1 x VGA 1 x iDP interface	Triple independent display support 1 x HDMI 2.0 1 x DVI-D 1 x VGA 1 x iDP interface	Dual independent display support 1 x VGA 1 x HDMI 1 x iDP interface	Dual independent display support 1 x DVI-I 1 x HDMI 1 x iDP interface
Ethernet	LAN1: Intel® I219LM with Intel® AMT 11.0 support LAN2: Intel® I211 AT PCIe controller	LAN1: Intel® I219LM with Intel® AMT 11.0 support LAN2: Intel® I210-AT PCIe controller with NCSI support	LAN1: Intel® I219LM with Intel® AMT 11.0 support LAN2: Intel® I210-AT PCIe controller with NCSI support	LAN1: Intel® I219V PHY LAN2: Intel® I211 PCIe controller	LAN1: Intel® I219V PHY LAN2: Intel® I211 PCIe controller
iRIS Remote Management Module	N/A	1 x iRIS-2400 slot	1 x iRIS-2400 slot	N/A	N/A
I/O Interface	1 x LPT 1 x RS-232/422/485 (RS-485 support AFC) 2 x KB/MS 4 x USB 2.0 4 x USB 3.2 Gen 1 5 x RS-232	1 x KB/MS 1 x LPT 2 x RS-232/422/485 4 x RS-232 5 x USB 3.2 Gen 1 7 x USB 2.0	1 x KB/MS 1 x LPT 2 x RS-232/422/485 4 x RS-232 5 x USB 3.2 Gen 1 7 x USB 2.0	1 x KB/MS 1 x LPT 1 x RS-232/422/485 4 x USB 3.2 5 x RS-232 5 x USB 2.0	1 x KB/MS 1 x LPT 2 x RS-232/422/485 4 x RS-232 4 x USB 3.2 Gen 1 5 x USB 2.0
Storage Interface	4 x SATA 6G/s (no RAID)	6 x SATA 6Gb/s (RAID 0/1/5/10 supported)	6 x SATA 6Gb/s (RAID 0/1/5/10 supported)	3 x SATA 6Gb/s	4 x SATA 6Gb/s
Audio	Realtek ALC888S HD Audio codec				
Digital I/O	8-bit programmable I/O (8-bit GPIO is for programming I/O)			N/A	8-bit programmable I/O (8-bit GPIO is for programming I/O)
Power Consumption	3.3V@0.39A, 5V@2.99A, 12V@3.08A, 5VSB@0.2A (Intel® Core™ i5-8500 up to 3.00 GHz CPU with 20 GB 2400/2133 MHz DDR4 memory)	3.3V@1.51A, 5V@3.31A, 12V@9.02A, 5VSB@3.7A (Intel® Xeon® E3-1275 v5 3.60 GHz CPU with 32 GB (four 8GB) 2133 MHz DDR4 memory)	3.3V@1.65A, 5V@3.4A, 12V@8.58A, 5VSB@0.22A (Intel® Core™ i7-6700K 4.0GHz CPU with 32 GB (four 4 GB) 2133 MHz DDR4 memory)	3.3V@1.53A, 5V@2.95A, 12V@8.38A, 5VSB@3.2A (4.0 GHz Intel® Core™ i7-6700K CPU with two 8 GB 2133 MHz DDR4 memory)	3.3V@1.53A, 5V@2.95A, 12V@8.38A, 5VSB@3.2A (Intel® Core™ i7 6700K 4.0GHz CPU with 16GB (two 8GB) 2133 MHz DDR4 memory)
Watchdog Timer	Software programmable and supports 1~255 sec. system reset				
Operation Environment	Temperature Range: -20°C ~ 60°C (-4°F ~ 140°F) Relative Humidity: 5% ~ 95%, non-condensing				
Expansion Slot	1 x PCIe x16 (Gen3) 1 x PCIe x4 (Gen2) 4 x PCI	1 x Full-size PCIe Mini card slot (support mSATA) 2 x PCIe x8 (Gen3) 3 x PCIe x4 (Gen3) 2 x PCI slot	1 x Full-size PCIe Mini card slot (support mSATA) 2 x PCIe x8 (Gen3) 3 x PCIe x4 (Gen3) 2 x PCI slot	1 x Full-size PCIe Mini card slot (support mSATA) 1 x PCIe x16 slot (Gen3) 1 x PCIe x4 4 x PCI slot	1 x Full-size PCIe Mini card slot (support mSATA) 1 x PCIe x16 slot (Gen3) 6 x PCI slot
CPU Cooler	CF-115XA-R10 CF-115XC-R10 CF-115XD-R10 CF-115XE-R10	CF-115XA-R10 CF-115XC-R10 CF-115XD-R10 CF-115XE-R10	CF-115XA-R10 CF-115XC-R10 CF-115XD-R10 CF-115XE-R10	CF-115XA-R10 CF-115XC-R10 CF-115XD-R10 CF-115XE-R10	CF-115XA-R10 CF-115XC-R10 CF-115XD-R10 CF-115XE-R10

Industrial Motherboard Selection Guide





Model Name	IMBA-H810	IMBA-C2260-i2-R11	IMBA-Q870-i2
CPU Socket	LGA1150	LGA1150	LGA1150
CPU Type	4th generation Intel® Core™ i7/i5/i3 Pentium® and Celeron® processor	Intel® Xeon® E3, Core™ i3, Pentium®, Celeron® processor	Intel® Core™ i7/i5/i3, Pentium®, Celeron® processor
Chipset	Intel® H81	Intel® C226	Intel® Q87
Memory	Two 240-pin 1333/1600 MHz dual-channel DDR3 SDRAM unbuffered DIMM (system max. 16 GB)	Four 240-pin 1600/1333 MHz dual-channel DDR3 & DDR3L SDRAM ECC and non-ECC unbuffered DIMMs (system max. 32 GB)	Four 240-pin 1600/1333 MHz dual-channel DDR3 & DDR3L SDRAM unbuffered DIMMs (system max. 32 GB)
Display Interface	Dual independent display support 1 x DVI-D 1 x VGA 1 x iDP interface	Dual display supported 1 x VGA 1 x iDP interface	Triple display supported 1 x VGA 1 x DVI-D 1 x HDMI 1 x iDP interface
Ethernet	LAN1: Intel® I217-LM with Intel® AMT 9.0 support LAN2: Intel® I211-AT PCIe controller	LAN1: Intel® I217LM with Intel® AMT 9.0 support LAN2: Intel® I210-AT PCIe controller with NCSI support	LAN1: Intel® I217LM with Intel® AMT 9.0 support LAN2: Intel® I210-AT PCIe controller with NCSI support
iRIS Remote Management Module	N/A	1 x iRIS-2400 slot	1 x iRIS-2400 slot
I/O Interface	1 x IR 1 x PS/2 for KB/MS 1 x RS-232/422/485 1 x USB 2.0 Type A 2 x USB 3.2 Gen 1 5 x RS-232 6 x USB 2.0	1 x LPT 1 x PS/2 for KB/MS 1 x RS-422/485 4 x USB 3.2 Gen 1 5 x RS-232 8 x USB 2.0	1 x LPT 1 x PS/2 for KB/MS 1 x RS-422/485 4 x USB 3.2 Gen 1 5 x RS-232 8 x USB 2.0
Storage Interface	2 x SATA 3Gb/s 2 x SATA 6Gb/s	6 x SATA 6Gb/s (RAID 0/1/5/10 supported) 1 x mSATA (colay SATA port 6) (support SATA 6Gb/s signal only)	6 x SATA 6Gb/s (RAID 0/1/5/10 supported) 1 x mSATA (colay SATA port 6) (support SATA 6Gb/s signal only)
Audio	Realtek ALC888S HD Audio codec		
Digital I/O	8-bit programmable I/O (8-bit GPIO is for programming I/O)		
Power Consumption	3.3V@0.83A, 5V@2.2A, 12V@3.88A, 5VSB@0.3A (Intel® Core™ i7-4770K 3.90 GHz CPU with 8 GB (two 4 GB) 1333 MHz DDR3 memory)	3.3V@0.57A, 5V@4.50A, 12V@0.14A, Vcore_12V@5.20A, 5VSB@0.19A (Intel® E3-1240 v3 3.4GHz CPU with 16 GB (four 4 GB) 1333 MHz DDR3 memory)	3.3V@0.66A, 5V@4.34A, 12V@0.16A, Vcore_12V@4.01A, 5VSB@0.21A (Intel® Core™ i7-4770K 3.90 GHz CPU with four 1333 MHz 4 GB DDR3 DDR3 memory)
Watchdog Timer	Software programmable and supports 1~255 sec. system reset		
Operation Environment	Temperature Range: -20°C ~ 60°C (-4°F ~ 140°F) Relative Humidity: 5% ~ 95%, non-condensing	Temperature Range: -10°C ~ 60°C (14°F ~ 140°F) Relative Humidity: 5% ~ 95%, non-condensing	
Expansion Slot	1 x PCIe x 16 2 x PCIe x 1 4 x PCI 1 x PCIe Mini (support mSATA)	1 x PCIe x16 slot 3 x PCIe x4 slot Default setting: 1 x PCIe x8, 2 x PCIe x4 Optional setting: 1 x PCIe x16 by BIOS setting 1 x PCIe x1 slot 2 x PCI slot	1 x PCIe x16 slot (Gen 3) 1 x PCIe x4 slot 1 x PCIe x1 slot 4 x PCI slots
CPU Cooler	CF-115XA-R10 CF-115XE-R10	CF-115XA-R10 CF-115XE-R10	CF-115XA-R10 CF-115XE-R10

Industrial Motherboard Selection Guide





Model Name	IMB-H110	IMB-Q870-i2	IMB-H810-i2-R11
CPU Socket	LGA1151	LGA1150	LGA1150
CPU Type	6th generation Intel® Core™ i7/i5/i3, Celeron® and Pentium® processor	Intel® Core™ i7/i5/i3, Pentium®, Celeron® processor	Intel® Core™ i7/i5/i3, Pentium®, Celeron® processor
Chipset	Intel® H110	Intel® Q87	Intel® H81
Memory	Two 288-pin 2133MHz Dual-Channel DDR4 SDRAM Unbuffered DIMM supported up to 64GB	Four 240-pin 1600/1333 MHz dual-channel DDR3 & DDR3L SDRAM unbuffered DIMMs (system max. 32 GB)	Two 240-pin 1600/1333 MHz dual-channel DDR3 & DDR3L SDRAM unbuffered DIMMs (system max. 32 GB)
Display Interface	Dual independent display support 1 x VGA 1 x DVI-I 1 x LVDS 1 x iDP	Triple display supported 1 x VGA 1 x DVI-D 1 x HDMI 1 x iDP interface	Triple display supported 1 x VGA1 1 x VGA2 1 x iDP interface
Ethernet	Dual LAN: RTL 8111GN controller	LAN1: Intel® I217LM with Intel® AMT 9.0 support LAN2: Intel® I210-AT PCIe controller with NCSI support	LAN1: Intel® I217LM LAN2: Intel® I210-AT PCIe controller with NCSI support
iRIS Remote Management Module	N/A	1 x iRIS-2400 slot	
I/O Interface	1 x KB/MS 1 x LPT 2 x RS-232/422/485 4 x USB 3.2 Gen 1 8 x USB 2.0 10 x RS-232	1 x PS/2 for KB/MS 1 x RS-422/485 4 x USB 3.2 Gen 1 5 x RS-232 8 x USB 2.0	1 x LPT 1 x PS/2 for KB/MS 1 x RS-422/485 by s/w selection 2 x RS-232 2 x USB 3.2 Gen 1 8 x RS-232 10 x USB 2.0
Storage Interface	4 x SATA 6Gb/s (RAID 0/1 supported)	4 x SATA 6Gb/s (RAID 0/1/5/10 supported)	2 x SATA 6Gb/s 2 x SATA 3Gb/s (AHCI supported)
Audio	Realtek ALC888S HD Audio codec		
Digital I/O	8-bit programmable digital I/O	8-bit programmable I/O (8-bit GPIO is for programming I/O)	N/A
Power Consumption	3.3V@ 0.93A, 5V@2.99A, 12V@6.88A, 5VSB@0.02A (Intel® Core™ i7-6700K 4.0GHz CPU with 16GB (two 8GB) 2133 MHz DDR4 memory)	3.3V@0.53A, 5V@4.96A, 12V@0.12A, Vcore_12V@3.95A, 5VSB@0.18A (Intel® Core™ i7-4770K 3.90 GHz CPU with 16 GB four 1333 MHz 4 GB DDR3 memory)	3.3V@0.64A, 5V@4.20A, 12V@0.14A, Vcore_12V@3.88A, 5VSB@0.20A (Intel® Core™ i7-4770K 3.90 GHz CPU with 8 GB two 1333 MHz 4 GB DDR3 memory)
Watchdog Timer	Software programmable and supports 1~255 sec. system reset		
Operation Environment	Temperature Range: -20°C ~ 60°C (-4°F~140°F) Relative Humidity: 5% ~ 95% non-condensing		
Expansion Slot	1 x PCIe x16 slot (Gen3) 1 x Full-size PCIe Mini card slot 1 x PCIe x1 slot (Gen2) 2 x PCI slot	1 x PCIe x16 slot (Gen 3) 1 x PCIe x4 slot 1 x PCIe x1 slot 1 x PCI slot	1 x PCIe x16 slot (Gen 3) 1 x PCIe x1 slot 2 x PCI slot
CPU Cooler	CF-115XA-R10 CF-115XE-R10	CF-115XA-R10 CF-115XE-R10	CF-115XA-R10 CF-115XE-R10

IMBA-X570

ATX motherboard supports AM4 Socket supports AMD Ryzen™ 5000/4000/3000/2000 Series Processors, DDR4, Triple independent displays, dual GbE LAN, M.2, USB 3.2, SATA 6Gb/s, HD Audio and RoHS

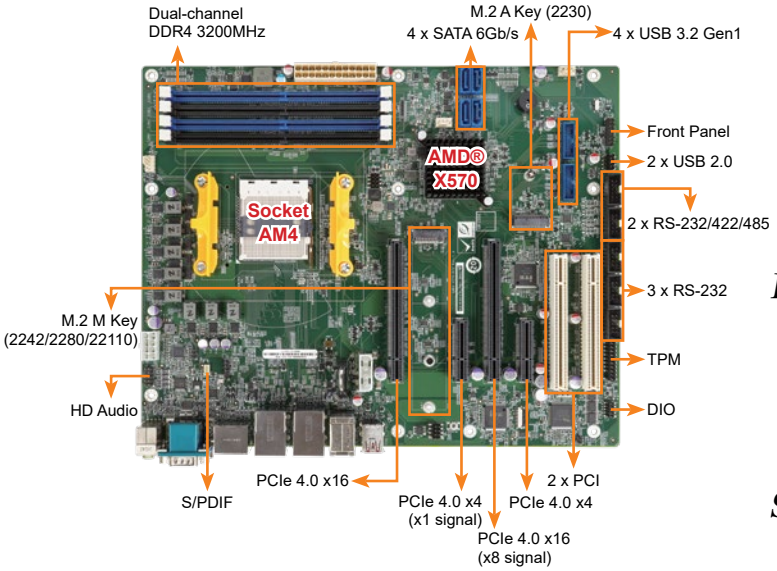

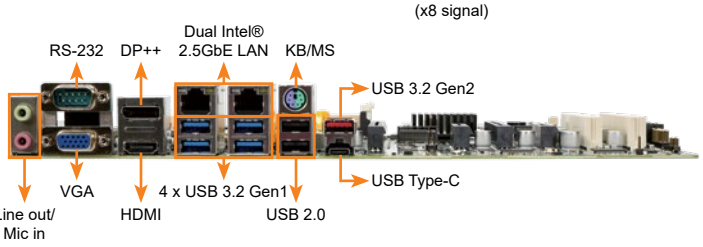

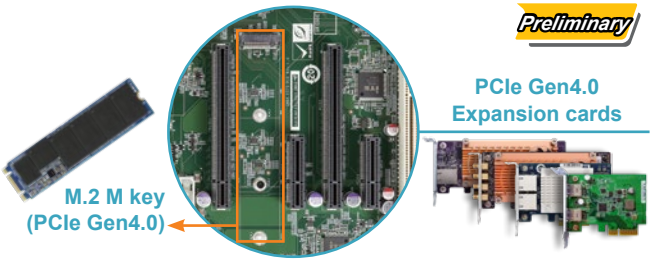

Features

- AMD AM4 Socket 5th,4th, 3rd, 2nd Gen AMD Ryzen™ with Radeon™ Vega Graphics Processors
- Dual-channel DDR4 3200 MHz (up to 128GB)
- PCIe Gen4.0 and USB TypeC
- Support Triple independent display with VGA /HDMI /DisplayPort
- Support WiFi 6 module and M.2 NVMe SSD
- Transparent Secure Memory Encryption (TSME), Secure Boot

Specifications

- CPU
  AM4 Socket supports AMD Ryzen™ 5000/4000/3000/2000 series with Radeon™ Vega Graphics processor
- Chipset: AMD X570
- BIOS: AMI UEFI BIOS
- Memory
  Four 288-pin 3200 MHz Dual-Channel DDR4 SDRAM Unbuffered DIMMs supported up to 128GB ECC Memory (ECC support varies by CPU)
- Graphics Engine
  Radeon™ Vega Graphics Supports AMD 2-Way CrossFireX™ Technology
- Display Output
  Triple independent displays
  1 x VGA (up to 1920x1200@60 Hz)
  1 x HDMI (up to 4096 x 2304@30Hz)
  1 x DP++ (up to 4096 x 2304@60Hz)
- Ethernet
  LAN1: Intel® I225V 2.5GbE controller
  LAN2: Intel® I225V 2.5GbE controller
- External I/O Interface
  1 x KB/MS
  1 x RS-232
  2 x USB 2.0
  2 x USB 3.2 Gen2 (type A & type C)
  4 x USB 3.2 Gen1
- Internal I/O Interface
  1 x KB/MS (1x6 pin)
  2 x RS-232/422/485 (2x5 pin, P=2.54) (Support Auto Flow Control over RS-485)
  2 x USB 2.0 (2x4 pin, P=2.54)
  3 x RS-232 (2x5 pin, P=2.54)
  4 x USB 3.2 Gen1 (2x10 pin, P=2.0)
  4 x SATA 6G/s (RAID 0/1/5/10 supported)
- Audio
  Realtek ALC888S HD Audio codec supports 7.1-channel
  3 x Audio Jack (Line-in, Line-out, Mic-in) on rear IO
  1 x S/PDIF output (pin header)
  1 x Front audio (2x5 pin)
- Front Panel
  1 x Front Panel (2x7 pin), Power LED, HDD LED, Speaker, Power Button, Reset Button)
- LAN LED: 2 x LAN LED (1x2 pin)
- Expansion
  1 x PCIe 4.0 x16 slot
  1 x PCIe 4.0 x4 slot (x1 signal)
  2 x PCI slot
  1 x M.2 M Key 2242/2280/22110 (PCIe 4.0 x4/SATA)
  1 x M.2 A Key 2230 (PCIe 4.0 x1/USB 2.0)
  1 x PCIe 4.0 x16 slot (x8 signal)
  1 x PCIe 4.0 x4 slot
- Digital I/O: 1 x 8-bit digital I/O (2x5 pin)
- TPM: 1 x TPM (2x10 pin)
- SMBus: 1 x SMBus(1x4 pin)
- I²C: 1 x I²C (1x4 pin)
- Fan Connector
  1 x CPU fan connector (1x4 pin)
  2 x System fan connector (1x4 pin)
- Chassis Open: 1 x Chassis intrusion connector (1x2 pin)
- Power Supply
  ATX/AT power supply
  Support AT/ATX mode
  ErP/EuP Compliant
- Watchdog Timer
  Software programmable support 1~255 sec. system reset
- Power Consumption
  3.3V@2.06A, 5V@9.12A, 12V@2.01A, 5VSB@0.77A
  (AMD Ryzen™ 9 3900X up to 4.6 GHz CPU with 32 GB 3400 MHz DDR4 memory)
- Operating Temperature: -20°C ~ 60°C
- Storage Temperature: -30°C ~ 70°C
- Operating Humidity: 5% ~ 95%, non-condensing
- Dimensions: 244mm x 305mm
- Weight: GW:1200g / NW:700g
- CE/FCC compliant

Packing List

1 x IMBA-X570 single board computer
2 x SATA cable
1 x I/O shielding
1 x QIG

Ordering Information

Part No.	Description
IMBA-X570-R10	ATX motherboard supports AM4 Socket supports AMD Ryzen™ 5000/4000/3000/2000 Series Processors, DDR4, Triple independent displays, dual GbE LAN, M.2, USB 3.2, SATA 6Gb/s, HD Audio and RoHS
19800-000075-RS	PS/2 KB/MS cable with bracket, 220mm, P=2.0
19800-003100-100-RS	Dual port USB cable with bracket, 30mm, P=2.54
19800-010500-200-RS	USB 3.2 Gen 1 (5Gb/s) cable 457mm with bracket
32102-000100-200-RS	SATA power cable, MOLEX 5264-4P to SATA15P
32205-000702-100-RS	RS-232 cable, 230mm, P=2.54
TPM-IN02-R20	20-pin Infineon TPM 2.0 module, software management tool, firmware v5.5

IMBA-Q470

ATX motherboard supports LGA1200 Intel® 10th Generation Core™ i9/i7/i5/i3, Celeron® and Pentium® processor, DDR4, triple independent displays, dual 2.5GbE LAN, M.2, USB 3.2, SATA 6Gb/s, HD Audio and RoHS

Preliminary

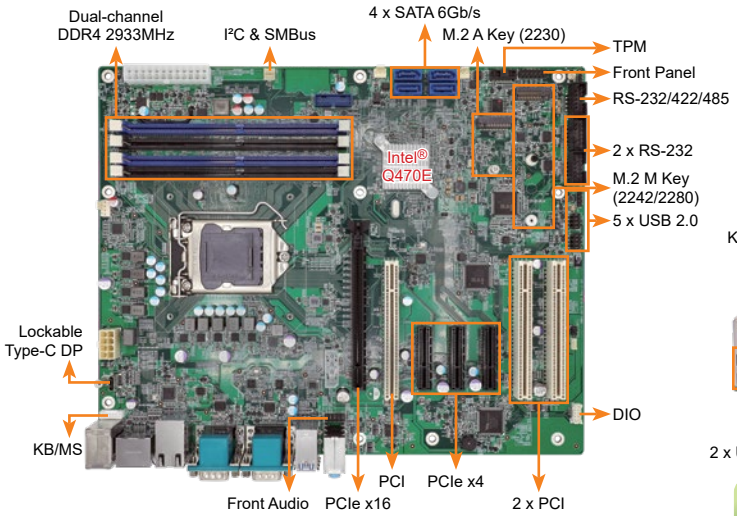

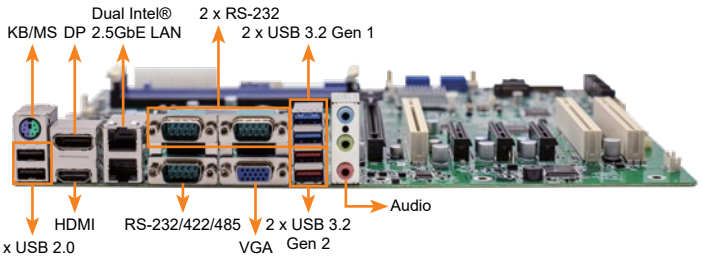

DDR4 2933 | Triple Display | 2.5GbE LAN | M.2 | DP | SATA 6Gb/s

Specifications

- CPU
  LGA1200 Intel® 10th generation Core™ i9/i7/i5/i3, Celeron® and Pentium® processor
- Chipset: Intel® Q470E
- BIOS: AMI UEFI BIOS
- Memory
  Four 288-pin 2933 MHz Dual-Channel DDR4 SDRAM Unbuffered DIMMs supported up to 128GB
- Graphics Engine
  Up to Intel® UHD Graphics 630, Intel® HD Graphics Gen 9 Engines with Low power 16 execution unit, supports DX2015, OpenGL 5.X and OpenCL2.x, ES 2.0
- Display Output
  Triple independent displays
  1 x VGA (up to 1920 x 1080 @60Hz)
  1 x DP (up to 4096 x 2304 @60Hz)
  1 x HDMI (up to 4096 x 2304@30Hz)
  1 x Internal 180º Type-C DP (up to 4096 x 2304 @60Hz)
- Ethernet
  LAN1: Intel® I225V 2.5GbE controller
  LAN2: Intel® I225V 2.5GbE controller
- External I/O Interface
  1 x PS/2 KB/MS
  1 x RS-232/422/485 (RS-485 support AFC)
  2 x RS-232
  2 x USB 2.0
  2 x USB 3.2 Gen1
  2 x USB 3.2 Gen2
- Internal I/O Interface
  1 x KB/MS (1x6 pin)
  1 x RS-232/422/485 (2x5 pin, P=2.54) (RS-485 support AFC)
  2 x RS-232 (2x5 pin, P=2.54)
  2 x USB 3.2 Gen1 (2x10 pin, P=2.0)
  4 x SATA 6G/s (RAID 0/1/5/10 supported)
  6 x USB 2.0 (2x4 pin, P=2.54)
- SMBus: 1 x SMBus (1x4 pin)
- I²C: 1 x I²C (1x4 pin)
- Audio
  Realtek ALC888S HD Audio codec
  3 x Audio Jack (Line-in, Line-out, Mic-in)
  1 x Analog audio (2x5 pin)
- Front Panel
  1 x Front Panel (2x7 pin, Power LED, HDD LED, Speaker, Power Button, Reset Button)
- LAN LED: 2 x LAN LED (1x2 pin)
- Expansion
  1 x PCIe x16
  3 x PCIe x4 open-end
  3 x PCI
  1 x M.2 A key (2230) with PCIe x1/USB 2.0
  1 x M.2 M Key (2240/2280) with PCIe x4
- Digital I/O: 1 x 8-bit digital I/O (2x5 pin)
- TPM: 1 x TPM (2x10 pin) compatible with TPM-IN03
- Fan Connector
  1 x CPU fan connector (1x4 pin)
  2 x System fan connector (1x3 pin)
- Chassis Open: 1 x Chassis intrusion (1x2 pin)
- Power Supply
  ATX/AT power supply
  Support AT/ATX mode
  ErP/EuP Compliant
- Watchdog Timer: Software Programmable support 1~255 sec. System reset
- Power Consumption: TBD
- Operating Temperature: -20°C ~ 60°C
- Storage Temperature: -30°C ~ 70°C
- Operating Humidity: 5% ~ 95%, non-condensing
- Dimension: 244mm x 305mm
- Weight: GW:1200g / NW:700g
- CE/FCC compliant

Features

- LGA1200 Intel® 10th Generation Core™ i9/i7/i5/i3, Celeron® and Pentium® processor
- Dual-channel DDR4 2933MHz
- Support HDMI, DP, VGA
- Support M.2 A key for WLAN expansion, M key for PCIe NVMe storage

Dimensions *(Unit: mm)*

Preliminary

Packing List

1 x IMBA-Q470 single board computer	1 x I/O Shielding
2 x SATA cable	1 x QIG

Ordering Information

Part No.	Description
IMBA-Q470-R10	ATX motherboard supports LGA1200 Intel® 10th Generation Core™ i9/i7/i5/i3, Celeron® and Pentium® processor, DDR4, triple independent displays, dual 2.5GbE LAN, M.2, USB 3.2, SATA 6Gb/s, HD Audio and RoHS
19800-000049-RS	LPT flat cable, 240mm, P=2.54
19800-000075-RS	PS/2 KB/MS cable with bracket, 220mm, P=2.0
19800-003100-100-RS	Dual port USB cable with bracket, 30mm, P=2.54
19800-010500-200-RS	USB 3.0 cable 457mm with bracket
32102-000100-200-RS	SATA power cable, MOLEX 5264-4P to SATA15P
32205-000702-100-RS	RS-232 cable, 230mm, P=2.54
CF-1156A-RS-R11	High-performance LGA1155/1156 cooler kit, 1U chassis compatible 73W
CF-1156C-RS	LGA1155/LGA1156 cooler kit, 1U chassis compatible, 45W
CF-1156D-RS	LGA1155/LGA1156 cooler kit, 1U chassis compatible, 65W
CF-1156E-R11	High-performance LGA1155/1156 cooler kit, 95W
TPM-IN03-R10	20-pin Infineon SPI TPM2.0 module, software mangement tool, firmware V7.63

IMBA-W480

ATX motherboard supports LGA1200 Intel® 10th Generation Xeon® W, Core™ i9/ i7/i5/i3, Celeron® and Pentium® processor, DDR4, triple independent displays, dual 2.5GbE LAN, M.2, USB 3.2, SATA 6Gb/s, HD Audio and RoHS

Preliminary

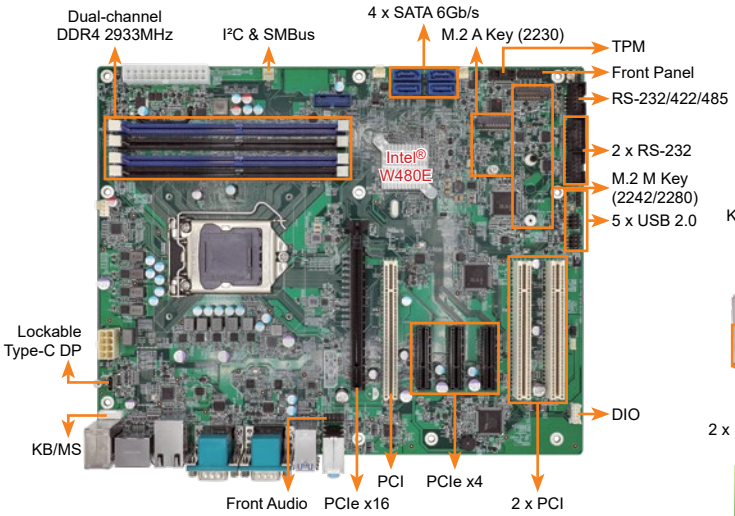

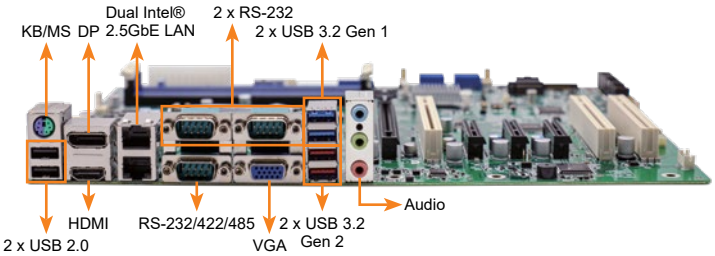

DDR4 2933 | Triple Display | 2.5GbE LAN | M.2 | DP | SATA 6Gb/s

Specifications

- CPU
  LGA1200 Intel® 10th generation Xeon® W, Core™ i9/i7/i5/i3, Celeron® and Pentium® processor
- Chipset: Intel® W480E
- BIOS: AMI UEFI BIOS
- Memory
  Four 288-pin 2933 MHz Dual-Channel DDR4 SDRAM Unbuffered DIMMs supported up to 128GB (ECC&non-ECC support)
- Graphics Engine
  Up to Intel® UHD Graphics 630, Intel® HD Graphics Gen 9 Engines with Low power 16 execution unit, supports DX2015, OpenGL 5.X and OpenCL2.x, ES 2.0
- Display Output
  Triple independent displays
  1 x VGA (up to 1920 x 1080 @60Hz)
  1 x DP (up to 4096 x 2304 @60Hz)
  1 x HDMI (up to 4096 x 2304@30Hz
  1 x Internal 180º Type-C DP (up to 4096 x 2304 @60Hz)
- Ethernet
  LAN1: Intel® I225V 2.5GbE controller
  LAN2: Intel® I225V 2.5GbE controller
- External I/O Interface
  1 x PS/2 KB/MS
  1 x RS-232/422/485 (RS-485 support AFC)
  2 x RS-232
  2 x USB 2.0
  2 x USB 3.2 Gen1
  2 x USB 3.2 Gen2
- Internal I/O Interface
  1 x KB/MS (1x6 pin)
  1 x RS-232/422/485 (2x5 pin, P=2.54) (RS-485 support AFC)
  2 x RS-232 (2x5 pin, P=2.54)
  2 x USB 3.2 Gen1 (2x10 pin, P=2.0)
  4 x SATA 6G/s (RAID 0/1/5/10 supported)
  6 x USB 2.0 (2x4 pin, P=2.54)
- SMBus: 1 x SMBus (1x4 pin)
- I²C: 1 x I²C (1x4 pin)
- Audio
  Realtek ALC888S HD Audio codec
  3 x Audio Jack (Line-in, Line-out, Mic-in)
  1 x Analog audio (2x5 pin)
- Front Panel
  1 x Front Panel (2x7 pin, Power LED, HDD LED, Speaker, Power Button, Reset Button)
- LAN LED: 2 x LAN LED (1x2 pin)
- Expansion
  1 x PCIe x16
  3 x PCIe x4 open-end
  3 x PCI
  1 x M.2 A key (2230) with PCIe x1/USB 2.0
  1 x M.2 M Key (2240/2280) with PCIe x4
- Digital I/O: 1 x 8-bit digital I/O (2x5 pin)
- TPM: 1 x TPM (2x10 pin) compatible with TPM-IN03
- Fan Connector
  1 x CPU fan connector (1x4 pin)
  2 x System fan connector (1x3 pin)
- Chassis Open: 1 x Chassis intrusion (1x2 pin)
- Power Supply
  ATX/AT power supply
  Support AT/ATX mode
  ErP/EuP Compliant
- Watchdog Timer: Software Programmable support 1~255 sec. System reset
- Power Consumption: TBD
- Operating Temperature: -20°C ~ 60°C
- Storage Temperature: -30°C ~ 70°C
- Operating Humidity: 5% ~ 95%, non-condensing
- Dimension: 244mm x 305mm
- Weight: GW:1200g / NW:700g
- CE/FCC compliant

Features

- LGA1200 Intel® 10th Generation Xeon® W, Core™ i9/i7/i5/i3, Celeron® and Pentium® processor
- Dual-channel DDR4 2933MHz (ECC&non-ECC support)
- Support HDMI, DP, VGA
- Support M.2 A key for WLAN expansion, M key for PCIe NVMe storage

Dimensions *(Unit: mm)*

Preliminary

Packing List

1 x IMBA-W480 single board computer	1 x I/O Shielding
2 x SATA cable	1 x QIG

Ordering Information

Part No.	Description
IMBA-W480-R10	ATX motherboard supports LGA1200 Intel® 10th Generation Xeon® W, Core™ i9/i7/i5/i3, Celeron® and Pentium® processor, DDR4, triple independent displays, dual 2.5GbE LAN, M.2, USB 3.2, SATA 6Gb/s, HD Audio and RoHS
19800-000049-RS	LPT flat cable, 240mm, P=2.54
19800-000075-RS	PS/2 KB/MS cable with bracket, 220mm, P=2.0
19800-003100-100-RS	Dual port USB cable with bracket, 30mm, P=2.54
19800-010500-200-RS	USB 3.0 cable 457mm with bracket
32102-000100-200-RS	SATA power cable, MOLEX 5264-4P to SATA15P
32205-000702-100-RS	RS-232 cable, 230mm, P=2.54
CF-1156A-RS-R11	High-performance LGA1155/1156 cooler kit, 1U chassis compatible 73W
CF-1156C-RS	LGA1155/LGA1156 cooler kit, 1U chassis compatible, 45W
CF-1156D-RS	LGA1155/LGA1156 cooler kit, 1U chassis compatible, 65W
CF-1156E-R11	High-performance LGA1155/1156 cooler kit, 95W
TPM-IN03-R10	20-pin Infineon SPI TPM2.0 module, software mangement tool, firmware V7.63

IMBA-C2460

ATX motherboard supports 14nm LGA1151 Intel® 8th/9th Generation Xeon® E, Core™ i9/i7/i5/i3, Celeron® and Pentium® processor per Intel® C246, DDR4, triple displays, dual GbE LAN, M.2, USB 3.2, SATA 6Gb/s, HD Audio and RoHS

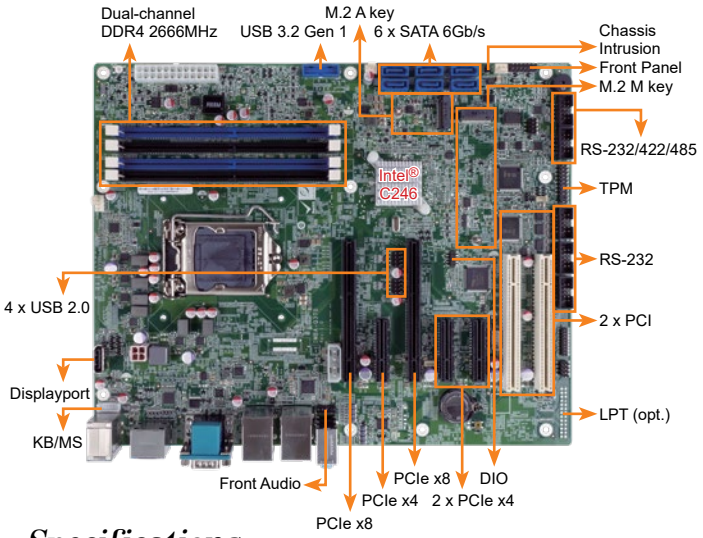

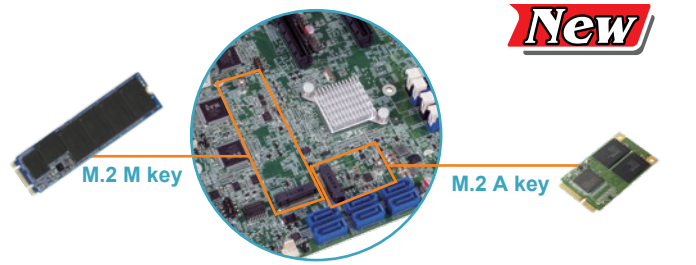

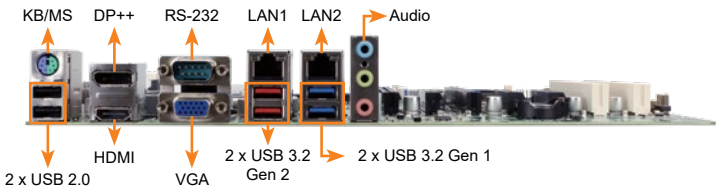



Specifications

- CPU
  LGA1151 Intel® 8th/9th Generation Xeon® E, Core™ i9/i7/i5/i3, Celeron® and Pentium® processor
- Chipset: Intel® C246
- BIOS: AMI UEFI BIOS
- Memory
  Four 288-pin 2666/2400 MHz Dual-Channel DDR4 SDRAM Unbuffered DIMMs supported up to 64GB (ECC&non-ECC support)
- Graphics Engine
  Intel® HD Graphics Gen 9 Engines with Low power 16 execution unit, supports DX2015, OpenGL 5.X and OpenCL2.x, ES 2.0
- Display Output
  Triple independent display
  1 x VGA (up to 1920 x 1080@60Hz)
  1 x DP++ (up to 4096 x 2304@60Hz)
  1 x HDMI (up to 4096 x 2304@30Hz)
  1 x Internal Displayport (up to 4096 x 2304@60Hz)
- Ethernet
  LAN1: Intel® I219LM PCIe controller with AMT 11.0 support
  LAN2: Intel® I210AT PCIe controller
- External I/O Interface
  2 x USB 3.2 Gen 2 (10Gb/s)
  2 x USB 3.2 Gen 1 (5Gb/s)
  2 x USB 2.0
  1 x RS-232
  1 x PS/2 KB/MS
- Internal I/O Interface
  1 x 180° Displyport
  2 x RS-232/422/485 (2x5 pin, P=2.54)
  2 x USB 3.2 Gen 1 (5Gb/s) (2x10 pin, P=2.0)
  6 x SATA 6G/s (RAID 0/1/5/10 supported)
  1 x KB/MS (1x6 pin)
  3 x RS-232 (2x5 pin, P=2.54)
  4 x USB 2.0 (2x4 pin, P=2.54)
- SMBus: 1 x SMBus (1x4 pin)
- I²C: 1 x I²C (1x4 pin)
- Audio
  Realtek ALC888S HD Audio codec
  3 x Audio Jack (Line-in, Line-out, Mic-in)
  1 x Analog audio (2x5 pin)
- Front Panel
  1 x Front Panel (2x7 pin, Power LED, HDD LED, Speaker, Power Button, Reset Button)
- LAN LED: 2 x LAN LED (1x2 pin)
- Expansion
  2 x PCIe x8
  3 x PCIe x4
  2 x PCI
  1 x M.2 A key (2230, PCIe x1 & USB 2.0)
  1 x M.2 M Key (2280, PCIe x2 only)
- Digital I/O: 1 x 8-bit digital I/O (2x5 pin)
- TPM: 1 x TPM (2x10 pin)
- Fan Connector
  1 x CPU fan connector (1x4 pin)
  2 x System fan connector (1x3 pin)
- Chassis Open:1 x Chassis intrusion (1x2 pin)
- Power Supply
  ATX/AT power supply
  Support AT/ATX mode
  ErP/EuP Compliant
- Watchdog Timer: Software Programmable support 1~255 sec. system reset
- Power Consumption
  3.3V@0.38A, 5V@9.38A, 12V@6.23A, 5VSB@0.16A
  (3.0 GHz Intel® Core™ I5-8500 CPU with four 16 GB 2400 MHz DDR4 memory)
- Operating Temperature: -20°C ~ 60°C
- Storage Temperature: -30°C ~ 70°C
- Operating Humidity: 5% ~ 95%, non-condensing
- Dimensions: 244mm x 305mm
- Weight: GW:1200g / NW:700g
- CE/FCC compliant

Features

- LGA1151 Intel® 8th/9th Generation Xeon® E, Core™ i9/i7/i5/i3, Celeron® and Pentium® processor
- Dual-channel DDR4 2666MHz
- Support VGA, HDMI & DP++
- Support M.2 A key for WLAN expansion, M key for storage

Packing List

1 x IMBA-C2460 single board computer	2 x SATA cable
1 x I/O shielding	1 x QIG

Dimensions *(Unit: mm)*

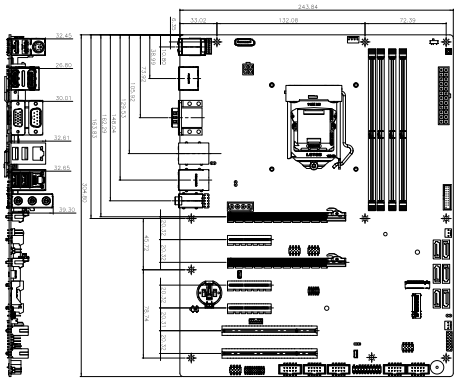

Ordering Information

Part No.	Description
IMBA-C2460-R10	ATX motherboard supports 14nm LGA1151 Intel® 8th/9th Generation Xeon® E, Core™ i9/i7/i5/i3, Celeron® and Pentium® processor per Intel® C246, DDR4, triple displays, dual GbE LAN, M.2, USB 3.2, SATA 6Gb/s, HD Audio and RoHS
19800-000075-RS	PS/2 KB/MS cable with bracket, 220mm, P=2.0
19800-003100-100-RS	Dual port USB cable with bracket, 30mm, P=2.54
19800-010500-200-RS	USB 3.2 Gen 1 (5Gb/s) cable 457mm with bracket
32102-000100-200-RS	SATA power cable, MOLEX 5264-4P to SATA15P
32205-000702-100-RS	RS-232 cable, 230mm, P=2.54
CF-115XA-R10	High performance LGA115X cooler kit ,1U chassis compatible, 73W
CF-115XC-R10	LGA1155/LGA1156 cooler kit, 1U chassis compatible, 45W
CF-115XD-R10	LGA1155/LGA1156 cooler kit, 1U chassis compatible, 65W
CF-115XE-R10	High-performance LGA1155/1156 cooler kit, 95W
TB3-40GDP-R10	PCI Express Thunderbolt expasion card with Intel® DSL6540, 2 port thunderbolt 3 port (USB Type-C), RoHS
TPM-IN02-R20	20-pin Infineon TPM 2.0 module, software management tool, firmware v5.5

IMBA-Q370

ATX motherboard supports 14nm LGA1151 Intel® 8th/9th Generation Core™ i9/i7/ i5/i3, Celeron® and Pentium® processor, DDR4, triple independent displays, dual GbE LAN, M.2, USB 3.2 Gen 2 (10Gb/s), SATA 6Gb/s, HD Audio and RoHS

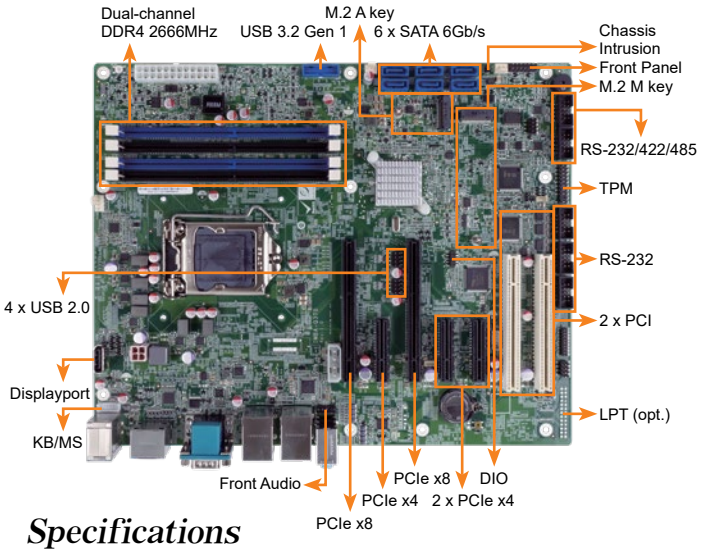

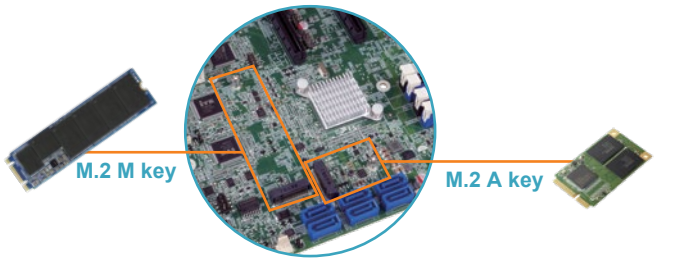

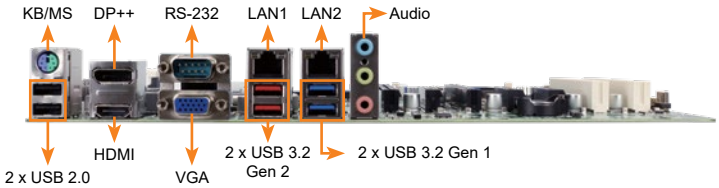



Specifications

- CPU
  LGA1151 socket supports 8th/9th generation Intel® Core™ i9/i7/i5/i3, Pentium® or Celeron® processor
- Chipset: Intel® Q370
- BIOS: AMI UEFI BIOS
- Memory
  Four 288-pin 2666/2400 MHz Dual-Channel DDR4 SDRAM Unbuffered DIMMs supported up to 64GB
- Graphics Engine
  Intel® HD Graphics Gen9 Engines with Low power 16 execution unit, supports DX11.3/12, OpenGL 4.3/4.4/4.5and OpenCL1.2/2.0/2.1
- Display Output
  Triple independent display
  1 x VGA (up to 1920 x 1080@60Hz)
  1 x DP++ (up to 4096 x 2304@60Hz)
  1 x HDMI (up to 4096 x 2304@30Hz)
  1 x internal Displayport (up to 4096 x 2304@60Hz)
- Ethernet
  LAN1 : Intel® I219LM PCIe controller with AMT 11.0 support
  LAN2: Intel® I211AT PCIe controller
- Super I/O: Embedded Controller
- External I/O Interface
  2 x USB 3.2 Gen 2 (10Gb/s)
  2 x USB 3.2 Gen 1 (5Gb/s)
  2 x USB 2.0
  1 x RS-232
  1 x PS/2 KB/MS
- Internal I/O Interface
  1 x 180° Displyport
  2 x RS-232/422/485 (2x5 pin, P=2.54)
  2 x USB 3.2 Gen 1 (5Gb/s) (2x10 pin, P=2.0)
  6 x SATA 6G/s (RAID 0/1/5/10 supported)
  1 x KB/MS (1x6 pin)
  3 x RS-232 (2x5 pin, P=2.54)
  4 x USB 2.0 (2x4 pin, P=2.54)
- SMBus: 1 x SMBus (1x4 pin)
- I²C: 1 x I²C (1x4 pin)
- Audio
  Realtek ALC888S HD Audio codec
  3 x Audio Jack (Line-in, Line-out, Mic-in)
  1 x Analog audio (2x5 pin)
- Front Panel
  1 x Front Panel (2x7 pin, Power LED, HDD LED, Speaker, Power Button, Reset Button)
- LAN LED: 2 x LAN LED (1x2 pin)
- Expansion
  2 x PCIe x8
  3 x PCIe x4
  2 x PCI
  1 x M.2 A key (2230, PCIe x1 & USB 2.0)
  1 x M.2 M Key (2280, PCIe x2 only)
- Digital I/O: 1 x 8-bit digital I/O (2x5 pin)
- TPM: 1 x TPM (2x10 pin)
- FAN Connector
  1 x CPU fan connector (1x4 pin)
  2 x System fan connector (1x3 pin)
- Chassis Open: 1 x Chassis intrusion (1x2 pin)
- Power supply
  ATX/AT power supply
  Support AT/ATX mode
  ErP/EuP Compliant
- Watchdog Timer: Software programmable support 1~255 sec. system reset
- Power Consumption
  3.3V@1.65A, 5V@3.4A, 12V@8.58A, 5VSV@3.4A (Intel® Core® i7-8700K up to 4.60 GHz CPU with 32GB 2600MHz DDR4 memory)
- Operating Temperature: -20°C ~ 60°C
- Storage Temperature: -30°C ~ 70°C
- Operating Humidity: 5% ~ 95%, non-condensing
- Diemensions: 244mm x 305mm
- Weight: GW:1200g / NW:700g
- CE/FCC compliant

Features

- LGA1151 Intel® 8th/9th Generation Core™ i9/i7/i5/i3, Celeron® and Pentium® processor
- Dual-channel DDR4 2666MHz
- Support VGA, HDMI & DP++
- Support M.2 A key for WLAN expansion, M key for storage

Packing List

1 x IMBA-Q370 single board computer	2 x SATA cable
1 x I/O shielding	1 x QIG

Dimensions *(Unit: mm)*

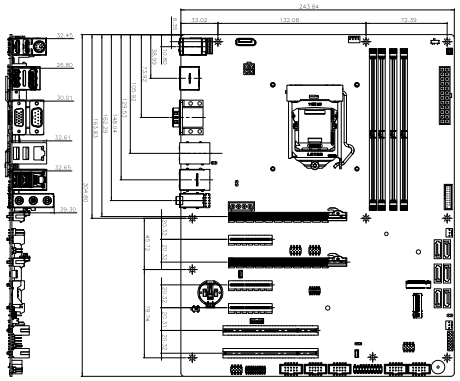

Ordering Information

Part No.	Description
IMBA-Q370-R10	ATX motherboard supports 14nm LGA1151 Intel® 8th/9th Generation Core™ i9/i7/i5/i3, Celeron® and Pentium® processor, DDR4, triple independent displays, dual GbE LAN, M.2, USB 3.2, SATA 6Gb/s, HD Audio and RoHS
19800-000075-RS	PS/2 KB/MS cable with bracket, 220mm, P=2.0
19800-003100-100-RS	Dual port USB cable with bracket, 30mm, P=2.54
19800-010500-200-RS	USB 3.2 Gen 1 (5Gb/s) cable 457mm with bracket
32102-000100-200-RS	SATA power cable, MOLEX 5264-4P to SATA15P
32205-000702-100-RS	RS-232 cable, 230mm, P=2.54
CF-115XA-R10	High performance LGA115X cooler kit ,1U chassis compatible, 73W
CF-115XC-R10	LGA1155/LGA1156 cooler kit, 1U chassis compatible, 45W
CF-115XD-R10	LGA1155/LGA1156 cooler kit, 1U chassis compatible, 65W
CF-115XE-R10	High-performance LGA1155/1156 cooler kit, 95W
TB3-40GDP-R10	PCI Express Thunderbolt expasion card with Intel® DSL6540, 2 port thunderbolt 3 port (USB Type-C), RoHS
TPM-IN02-R20	20-pin Infineon TPM 2.0 module, software management tool, firmware v5.5

IMBA-H310

ATX motherboard supports 14nm LGA1151 Intel® H310 8th/9th Generation Core™ i9/i7/i5/i3, Celeron® and Pentium® processor, DDR4, Dual Independent Displays, dual GbE LAN, USB 3.2, SATA 6Gb/s, HD Audio and RoHS

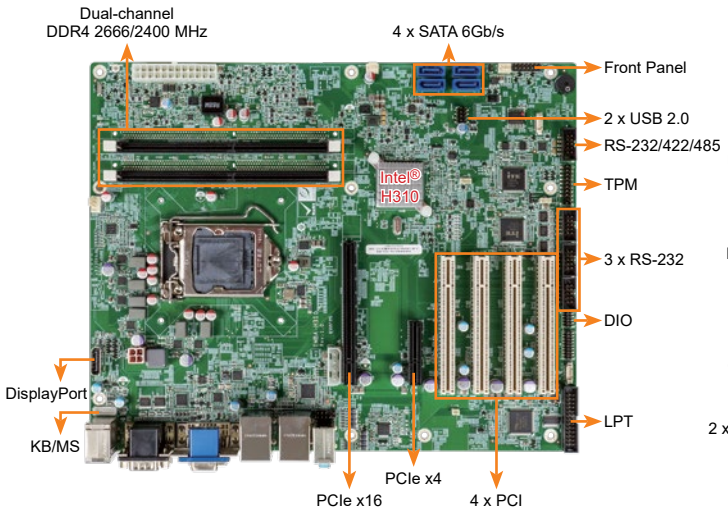

PCIe and PCI Slots for Multiple Expansion Support

New

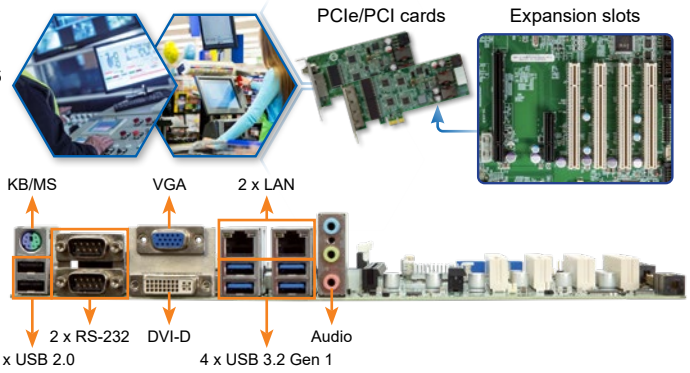



Specifications

- CPU
  LGA1151 Intel® H310 8th/9th Generation Core™ i9/i7/i5/i3, Celeron® and Pentium® processor
- Chipset
  Intel® H310
- BIOS
  AMI UEFI BIOS
- Memory
  Two 288-pin 2666/2400 MHz Dual-Channel DDR4 SDRAM Unbuffered DIMMs supported up to 64GB
- Graphics Engine
  Intel® HD Graphics Gen 9 Engine with 16 Low-power execution units supports DX2015, OpenGL 5.X and OpenCL2.x, ES 2.0
- Display Output
  Triple independent display
  1 x DVI-D (up to 2560x1600@60Hz)
  1 x VGA (UP to 1920x1200@60Hz)
  1 x Internal 180° DP (up to 4096x2304@60Hz)
- Ethernet
  LAN1: Intel® I219LM PCIe controller
  LAN2: Intel® I211 AT PCIe controller
- External I/O Interface
  4 x USB 3.2 Gen 1 (5Gb/s)
  2 x USB 2.0
  2 x RS-232
  1 x KB/MS
- Internal I/O Interface
  1 x KB/MS (1x6 pin)
  1 x LPT (2x13 pin, P=2.54)
  1 x RS-232/422/485 (2x5 pin, P=2.54)
  2 x USB 2.0 (2x4 pin, P=2.54)
  3 x RS-232 (2x5 pin, P=2.54)
  4 x SATA 6G/s (no RAID)
- Audio
  Realtek ALC888S HD Audio codec supports 7.1-channel
  3 x Audio Jack (Line-in, Line-out, Mic-in) on rear IO
  1 x Front audio (2x5 pin)
- Front Panel
  1 x Front Panel (2x7 pin, Power LED, HDD LED, Speaker, Power Button, Reset Button)
- LAN LED
  2 x LAN LED (1x2 pin)
- Expansion
  1 x PCIe x16 (Gen3)
  1 x PCIe x4 (Gen2)
  4 x PCI
- Digital I/O: 1 x 8-bit digital I/O (2x5 pin)
- TPM: 1 x TPM (2x10 pin)
- SMBus: 1 x SMBus (1x4 pin)
- I²C: 1 x I²C (1x4 pin)
- Fan Connector
  1 x CPU fan connector (1x4 pin)
  2 x System fan connector (1x3 pin)
- Chassis Open: 1 x Chassis intrusion connector (1x2 pin)
- Power Supply
  ATX/AT power supply
  Support AT/ATX mode
  ErP/EuP Compliant"
- Watchdog Timer
  Software Programmable support 1~255 sec. System reset
- Power Consumption
  3.3V@0.39A, 5V@2.99A, 12V@3.08A, 5VSB@0.2A
  (Intel® Core™ i5-8500 up to 3.00 GHz CPU with 20 GB 2400/2133 MHz DDR4 memory)
- Operating Temperature: -20°C ~ 60°C
- Storage Temperature: -30°C ~ 70°C
- Operating Humidity: 5% ~ 95%, non-condensing
- Dimensions: 244mm x 305mm
- Weight: GW:1200g / NW:700g
- CE/FCC compliant

Features

- LGA1151 Intel® H310 8th/9th Generation Core™ i9/i7/i5/i3, Celeron® and Pentium® processor
- Dual-channel DDR4 2666MHz
- Support dual displays with DVI-D/VGA/DP
- Support USB 3.2 Gen 1 (5Gb/s) and SATA 6Gb/s

Dimensions *(Unit: mm)*

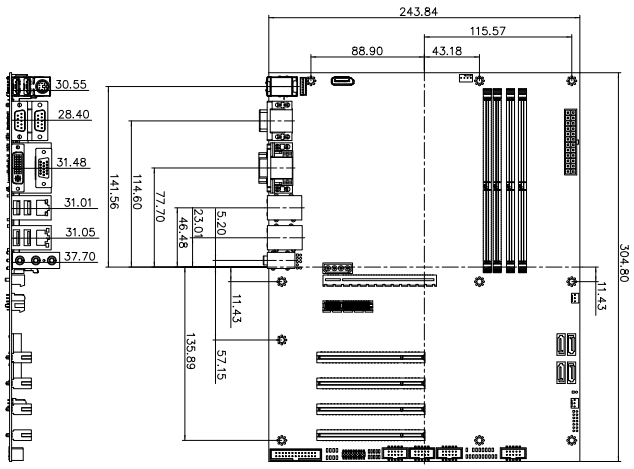

Packing List

1 x IMBA-H310 single board computer	1 x I/O Shielding
2 x SATA cable	1 x QIG

Ordering Information

Part No.	Description
IMBA-H310-R10	ATX motherboard supports 14nm LGA1151 Intel® H310 8th/9th Generation Core™ i9/i7/i5/i3, Celeron® and Pentium® processor, DDR4, Dual Independent Displays, dual GbE LAN, USB 3.2, SATA 6Gb/s, HD Audio and RoHS
19800-000075-RS	PS/2 KB/MS cable with bracket, 220mm, P=2.0
19800-003100-100-RS	Dual port USB cable with bracket, 30mm, P=2.54
32102-000100-200-RS	SATA power cable, MOLEX 5264-4P to SATA15P
32205-000702-100-RS	RS-232 cable, 230mm, P=2.54
CF1156A-RS-R11	High-performance LGA1155/1156 cooler kit, 1U chassis compatible 73W
CF-1156XC-R10	LGA1155/LGA1156 cooler kit, 1U chassis compatible, 45W
CF-1156XD-R10	LGA1155/LGA1156 cooler kit, 1U chassis compatible, 65W
CF-1156XE-R10	High-performance LGA1155/1156 cooler kit, 95W
TPM-IN02-R20	20-pin Infineon TPM 2.0 module, software management tool, firmware v5.5

IMBA-C2360-i2

ATX motherboard supports 14nm LGA1151 Intel® Xeon® E3 v5 series, Core™ i3, Pentium®, Celeron® processor per Intel® C236, DDR4, triple independent display, HDMI 2.0, dual Intel® PCIe GbE, USB 3.2 Gen 1 (5Gb/s), SATA 6Gb/s, HD Audio, IPMI 2.0 and RoHS

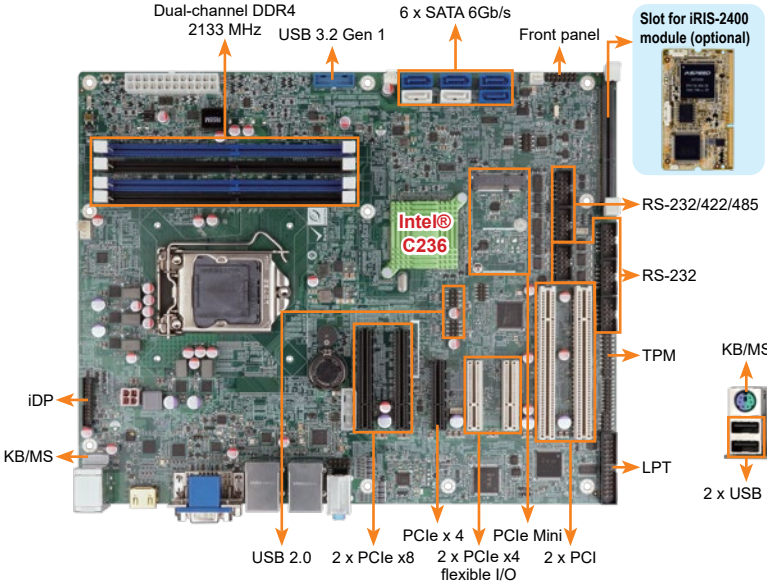

Dual BIOS (for flexible I/O only)

Easy for customer to switch different ME firmware to achieve I/O flexibility

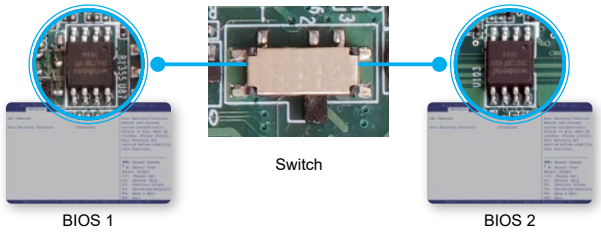

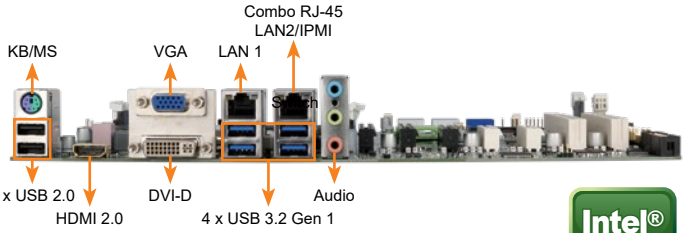

Intel® AMT 11

DDR4 2133 | Triple Display | USB 3.2 | SATA 6Gb/s | PCIe GbE | HDMI

Specifications

- CPU
  LGA 1151 socket supports Intel® Xeon® E3 v5/v6, 6th/7th generation Core™ i3, Pentium® or Celeron® processor
- Chipset
  Intel® C236
- Memory
  Four 288-pin 2133 MHz dual-channel DDR4 SDRAM ECC and non-ECC unbuffered DIMMs support up to 64 GB
- BIOS
  UEFI BIOS
- Graphics Engine
  Intel® HD Graphics Gen 9 engine with 16 low-power execution units, supports DX11/12, OpenGL 4.3/4.4 and OpenCL2.x, ES 2.0
- Display Output
  Triple independent display
  1 x VGA (up to 1920x1200@60Hz)
  1 x DVI-D (up to 1920x1200@60Hz)
  1 x HDMI 2.0 (up to 4096x2160@60Hz)
  1 x iDP interface for HDMI, LVDS, VGA, DVI, DP (up to 3840x2160@60Hz)
- Ethernet
  LAN1: Intel® I219LM with Intel® AMT 11.0 support
  LAN2: Intel® I210AT PCIe controller with NCSI support
- External I/O Interface
  2 x USB 2.0
  4 x USB 3.2 Gen 1 (5Gb/s)
- Internal I/O Interface
  1 x KB/MS (1x6 pin)
  1 x LPT (2x13 pin, P=2.54)
  2 x USB 3.2 Gen 1 (5Gb/s) (2x10 pin, P=2.0)
  2 x RS-232/422/485 (2x5 pin, P=2.54)
  4 x RS-232 (2x5 pin, P=2.54)
  4 x USB 2.0 (2x4 pin, P=2.0)
  6 x SATA 6Gb/s
- SMBus: 1 x SMBus (1x4 pin)
- I²C: 1 x I²C (1x4 pin)
- TPM: 1 x TPM (2x10 pin)
- Audio
  Realtek ALC888S HD Audio codec supports 7.1-channel
  3 x Audio jacks (line-out, line-in, mic-in) on rear IO
  1 x Front audio (2x5 pin)
- Front Panel
  1 x Front panel (2x7 pin, power LED, HDD LED, speaker, power button, reset button)
- LAN LED: 2 x LAN LED (1x2 pin)
- Expansion
  1 x Full-size PCIe Mini card slot (support mSATA)
  2 x PCI slot
  2 x PCIe x8 slot (Gen3)
  3 x PCIe x4 slot (Gen3)
- iRIS Remote Management Module: 1 x iRIS-2400 slot
- Watchdog Timer: Software programmable supports 1~255 sec. system reset
- Digital I/O: 8-bit digital I/O (2x5 pin)
- Fan Connector
  1 x CPU smart fan (1x4 pin)
  2 x System smart fan (1x3 pin)
- Power Supply: ATX/AT power supply
- Power Consumption
  3.3V@1.51A, 5V@3.31A, 12V@9.02A, 5VSB@3.7A (Intel® Xeon® E3-1275 v5 3.60 GHz CPU with 32 GB (four 8GB) 2133 MHz DDR4 memory)
- Operating Temperature: -20°C ~ 60°C
- Storage Temperature: -30°C ~ 70°C
- Operating Humidity: 5% ~ 95%, non-condensing
- Dimensions: 244mm x 305mm
- Weight: GW: 1200g / NW: 700g
- CE/FCC compliant

Features

- LGA 1151 Intel® Xeon® E3 v5/v6, 6th/7th generation Core™ i3, Pentium® or Celeron® processor supported
- Dual-channel DDR4 2133 MHz
- Intel® PCIe GbE with Intel® AMT11.0 support
- Support independent triple display with HDMI, DVI and VGA
- Support PCI Express generation 3.0 at 8GT/s I/O bandwidth
- USB 3.2 Gen 1 (5Gb/s) and SATA 6Gb/s
- Support IPMI 2.0 via iRIS-2400

Packing List

1 x IMBA-C2360-i2 single board computer	2 x SATA cable
1 x I/O shielding	1 x QIG

Ordering Information

Part No.	Description
IMBA-C2360-i2-R10	ATX motherboard supports 14nm LGA1151 Intel® Xeon® E3 v5 series, Core™ i3, Pentium®, Celeron® processor per Intel® C236, DDR4, triple independent display VGA/DVI-D/HDMI 2.0, dual Intel® PCIe GbE, USB 3.2 Gen 1 (5Gb/s), SATA 6Gb/s, HD Audio, IPMI 2.0 and RoHS
iRIS-2400-R10	IPMI 2.0 adapter card with AST2400 BMC chip for DDR3 SO-DIMM socket interface
PCIES-2PIMSATA-R10	Peripheral card for flexible I/O, 1 x PCIe Mini, 2 x mSATA expansion
PCIES-USB3-R10	Peripheral card for flexible I/O, USB 3.2 Gen 1 (5Gb/s) expansion
19800-000075-RS	PS/2 KB/MS cable with bracket, 220mm, P=2.0
19800-003100-100-RS	Dual port USB cable with bracket, 30mm, P=2.54
19800-010500-200-RS	USB 3.2 Gen 1 (5Gb/s) cable with bracket, 457mm
32102-000100-200-RS	SATA power cable, MOLEX 5264-4P to SATA15P
CF-115XC-R10	LGA1155/LGA1156 cooler kit, 1U chassis compatible, 45W
CF-115XD-R10	LGA1155/LGA1156 cooler kit, 1U chassis compatible, 65W
CF-115XE-R10	High performance LGA1155/LGA1156 cooler kit, 95W
DP-DP-R10	DisplayPort to DisplayPort converter board (for IEI iDP connector)
DP-DVI-R10	DisplayPort to DVI-D converter board (for IEI iDP connector)
DP-HDMI-R10	DisplayPort to HDMI converter board (for IEI iDP connector)
DP-LVDS-R10	DisplayPort to 24-bit dual-channel LVDS converter board (for IEI iDP connector)
DP-VGA-R10	DisplayPort to VGA converter board (for IEI iDP connector)
TPM-IN02-R20	20-pin Infineon TPM 2.0 module, software management tool, firmware v5.5

IMBA-Q170-i2

ATX motherboard supports 14nm LGA1151 Intel® CPU, Intel® Q170, DDR4, triple independent display VGA/ DVI-D/ HDMI 2.0, dual Intel® PCIe GbE, USB 3.2 Gen 1 (5Gb/s), SATA 6Gb/s, HD Audio, IPMI 2.0 and RoHS

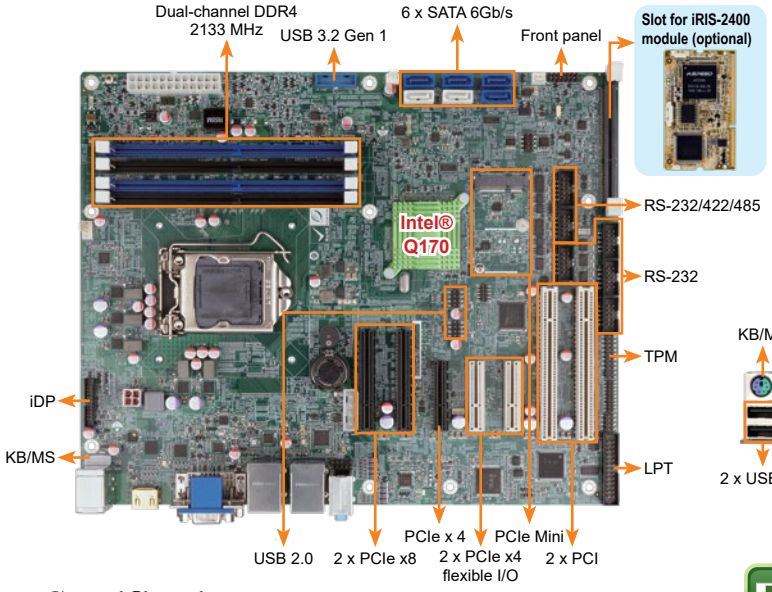

Flexible I/O support

IEI USB 3.2 Gen 1 (5Gb/s) & mSATA/PCIe Mini expansion card

The expansion card can provide more choices to meet users demand

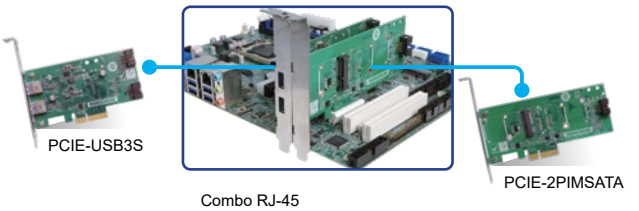

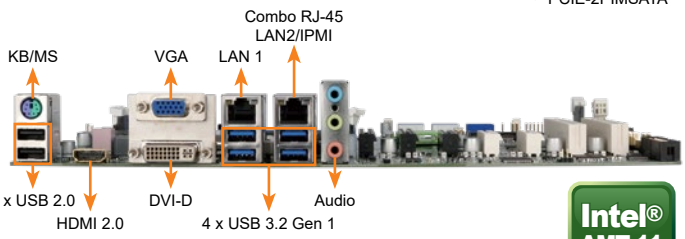

Intel® AMT 11

DDR4 2133 | Triple Display | USB 3.2 | SATA 6Gb/s | PCIe GbE | HDMI

Specifications

- CPU
  LGA 1151 socket supports Intel® 6th/7th generation Core™ i7/i5/i3, Pentium® or Celeron® processor
- Chipset
  Intel® Q170
- Memory
  Four 288-pin 2133 MHz dual-channel DDR4 SDRAM unbuffered DIMMs support up to 64 GB
- BIOS: UEFI BIOS
- Graphics Engine
  Intel® HD Graphics Gen 9 engine with 16 low-power execution units, supports DX11/12, OpenGL 4.3/4.4 and OpenCL2.x, ES 2.0
- Display Output
  Triple independent display
  1 x VGA (up to 1920x1200@60 Hz)
  1 x DVI-D (up to 1920x1200@60Hz)
  1 x HDMI 2.0 (up to 4096x2160@60Hz)
  1 x iDP interface for HDMI, LVDS, VGA, DVI, DP (up to 3840x2160@60Hz)
- Ethernet
  LAN1: Intel® I219LM with Intel® AMT 11.0 support
  LAN2: Intel® I210AT PCIe controller with NCSI support
- External I/O Interface
  2 x USB 2.0
  4 x USB 3.2 Gen 1 (5Gb/s)
- Internal I/O Interface
  1 x KB/MS (1x6 pin)
  1 x LPT (2x13 pin, P=2.54)
  2 x USB 3.2 Gen 1 (5Gb/s) (2x10 pin, P=2.0)
  2 x RS-232/422/485 (2x5 pin, P=2.54)
  4 x RS-232 (2x5 pin, P=2.54)
  4 x USB 2.0 (2x4 pin, P=2.0)
  6 x SATA 6Gb/s (RAID 0/1/5/10 supported)
- SMBus: 1 x SMBus (1x4 pin)
- I²C: 1 x I²C (1x4 pin)
- TPM: 1 x TPM (2x10 pin)
- Audio
  Realtek ALC888S HD Audio codec supports 7.1-channel
  3 x Audio jacks (line-out, line-in, mic-in) on rear IO
  1 x Front audio (2x5 pin)
- Front Panel
  1 x Front panel (2x7 pin, power LED, HDD LED, speaker, power button, reset button)
- LAN LED: 2 x LAN LED (1x2 pin)
- Expansion
  1 x Full-size PCIe Mini card slot (support mSATA)
  2 x PCI slot
  2 x PCIe x 8 slot (Gen3)
  3 x PCIe x 4 slot (Gen3)
- iRIS Remote Management Module: 1 x iRIS-2400 slot
- Watchdog Timer: Software programmable supports 1~255 sec. system reset
- Digital I/O: 8-bit digital I/O (2x5 pin)
- Fan Connector
  1 x CPU smart fan (1x4 pin)
  2 x System smart fan (1x3 pin)
- Chassis Open: 1 x Chassis intrusion (1x2 pin)
- Power Supply: ATX/AT power supply
- Power Consumption
  3.3V@1.65A, 5V@3.4A, 12V@8.58A, 5VSB@0.22A
  (Intel® Core™ i7-6700K 4.0GHz CPU with 32 GB (four 4 GB) 2133 MHz DDR4 memory)
- Operating Temperature: -20°C ~ 60°C
- Storage Temperature: -30°C ~ 70°C
- Operating Humidity: 5% ~ 95%, non-condensing
- Dimensions: 244mm x 305mm
- Weight: GW: 1200g / NW: 700g
- CE/FCC compliant

Features

- LGA 1151 Intel® 6th/7th generation Core™ i7/i5/i3, Pentium® or Celeron® processor supported
- Dual-channel DDR4 2133 MHz
- Support triple display with HDMI, DVI and VGA
- Support USB 3.2 Gen 1 (5Gb/s), SATA 6Gb/s and PCI Express Gen3
- Support IPMI 2.0 via iRIS-2400 module

Packing List

1 x IMBA-Q170-i2 single board computer	2 x SATA cable
1 x I/O shielding	1 x QIG

Ordering Information

Part No.	Description
IMBA-Q170-i2-R10	ATX motherboard supports 14nm LGA1151 Intel® CPU, Intel® Q170, DDR4, triple independent display VGA/ DVI-D/ HDMI 2.0, dual Intel® PCIe GbE, USB 3.2 Gen 1 (5Gb/s), SATA 6Gb/s, HD Audio, IPMI 2.0 and RoHS
IMBA-Q170-ECO-R10	ATX motherboard supports 14nm LGA1151 Intel® CPU, Intel® Q170, DDR4, triple independent display VGA/ DVI-D/ HDMI 2.0, dual Intel® PCIe GbE, USB 3.2 Gen 1 (5Gb/s), SATA 6Gb/s, HD Audio, ECO packing and RoHS (10 pcs/pack)
iRIS-2400-R10	IPMI 2.0 adapter card with AST2400 BMC chip for DDR3 SO-DIMM socket interface
PCIES-2PIMSATA-R10	Peripheral card for flexible I/O, 1 x PCIe Mini, 2 x mSATA expansion
PCIES-USB3-R10	Peripheral card for flexible I/O, USB 3.2 Gen 1 (5Gb/s) expansion
19800-000049-RS	LPT flat cable, 240mm, P=2.54
19800-000075-RS	PS/2 KB/MS cable with bracket, 220mm, P=2.0
19800-003100-100-RS	Dual port USB cable with bracket, 30mm, P=2.54
19800-010500-200-RS	USB 3.2 Gen 1 (5Gb/s) cable 457mm with bracket
32102-000100-200-RS	SATA power cable, MOLEX 5264-4P to SATA15P
32205-000702-100-RS	RS-232 cable, 230mm, P=2.54
CF-115XC-R10	LGA1155/LGA1156 cooler kit, 1U chassis compatible, 45W
CF-115XD-R10	LGA1155/LGA1156 cooler kit, 1U chassis compatible, 65W
CF-115XE-R10	High-performance LGA1155/1156 cooler kit, 95W
DP-DP-R10	DisplayPort to DisplayPort converter board (for IEI iDP connector)
DP-DVI-R10	DisplayPort to DVI-D converter board (for IEI iDP connector)
DP-HDMI-R10	DisplayPort to HDMI converter board (for IEI iDP connector)
DP-LVDS-R10	DisplayPort to 24-bit dual-channel LVDS converter board (for IEI iDP connector)
DP-VGA-R10	DisplayPort to VGA converter board (for IEI iDP connector)
TPM-IN02-R20	20-pin Infineon TPM 2.0 module, software management tool, firmware v5.5

IMBA-H112

ATX Motherboard supports 14nm LGA1151 6th/7th Generation Intel® Core i7/i5/i3, Celeron® and Pentium® processor, DDR4, Dual Independent Displays VGA and HDMI, Dual®Intel GbE LAN, USB 3.2, SATA 6Gb/s, HD Audio and RoHS

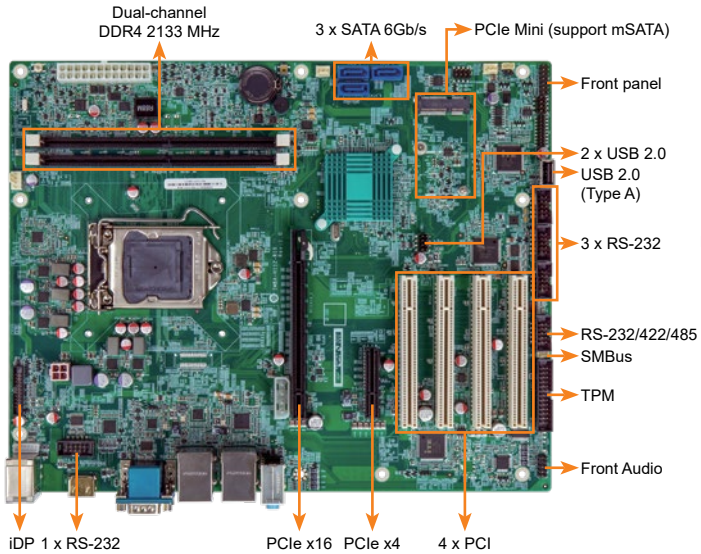

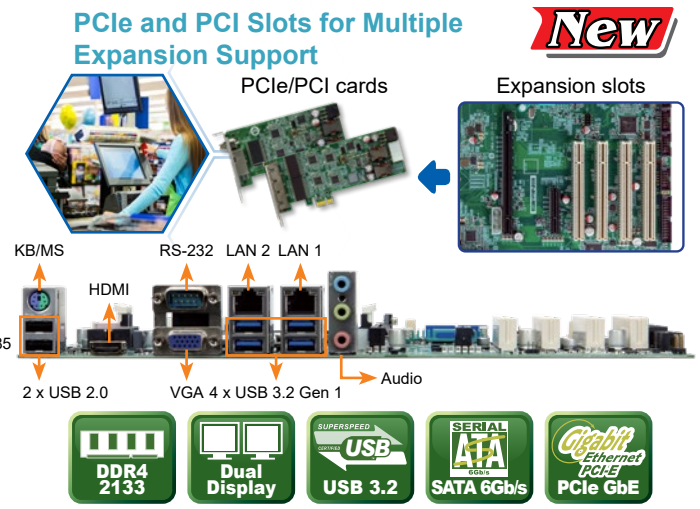

Specifications

- CPU
  LGA 1151 socket supports Intel® 6th/7th generation Core™ i7/i5/i3, Pentium® or Celeron® processor
- System Chipset
  Intel® H110
- Memory
  Two 288-pin 2133 MHz dual-channel DDR4 SDRAM unbuffered DIMMs support up to 64 GB
- BIOS
  AMI UEFI BIOS
- Graphic Engine
  Intel® HD Graphics Gen 9 Engines with Low power 16 execution unit, supports DX2015, OpenGL 5.X and OpenCL2.x, ES 2.0
- Display Output
  Dual independent display
  1 x VGA (up to 1920 x 1080@60Hz)
  1 x HDMI 1.4 (up to 4096x2160@24Hz)
  1 x iDP interface for HDMI, LVDS, VGA, DVI, DP (up to 3840x2160@60Hz)
- Ethernet
  LAN1: Intel® I219V PHY
  LAN2: Intel® I211 PCIe controller
- External I/O Interface
  4 x USB 3.2
  2 x USB 2.0
  1 x RS-232
- Internal I/O Interface
  1 x KB/MS (1x6 pin)
  1 x LPT (2x13 pin, P=2.54)
  1 x USB 2.0 (type A)
  2 x USB 2.0 (2x4 pin, P=2.54)
  1 x RS-232/422/485 (2x5 pin, P=2.54)
  3 x SATA 6Gb/s (support Hot plug)
  4 x RS-232 (2x5 pin, P=2.54)
- SMBus: 1 x SMBus (1x4 pin)
- I²C: 1 x I²C (1x4 pin)
- Audio
  Realtek ALC888S HD Audio codec supports 7.1-channel (2 Audio Jack colay 3 Jack) (Line-out, Mic)
- Front Audio
  2x5 pin pin header
- Front Panel
  1 x Front Panel (2x7 pin, Power LED, HDD LED, Speaker, Power Button, Reset Button)
- LAN LED
  2 x LAN LED (1x2 pin)
- Expansion
  1 x Full-size PCIe Mini card slot (support mSATA)
  1 x PCIe x16 slot (Gen3)
  1 x PCIe x4
  4 x PCI slot
- Watchdog Timer
  Software Programmable support 1~255 sec. system reset
- Fan Connector
  1 x CPU smart fan (1x4 pin)
  1 x System smart fan (1x4 pin)
- Power Supply: ATX/AT Power Supply
- Power Consumption
  3.3V@1.53A, 5V@2.95A, 12V@8.38A, 5VSB@3.2A (4.0 GHz Intel® Core™ i7-6700K CPU with two 8 GB 2133 MHz DDR4 memory)
- Operating Temperature: -20°C~60°C
- Storage Temperature: -20°C~70°C
- Operating Humidity: 5% ~ 95%, non-condensing
- Weight: 1200g / NW: 700g
- CE/FCC compliant

Features

- LGA 1151 Intel® 6th/7th generation Core™ i7/i5/i3, Pentium® or Celeron® processor supported
- Dual-channel DDR4 2133MHz
- Support dual displays with VGA/HDMI/iDP
- Support USB 3.2 Gen 1 (5Gb/s) and SATA 6Gb/s

Dimensions *(Unit: mm)*

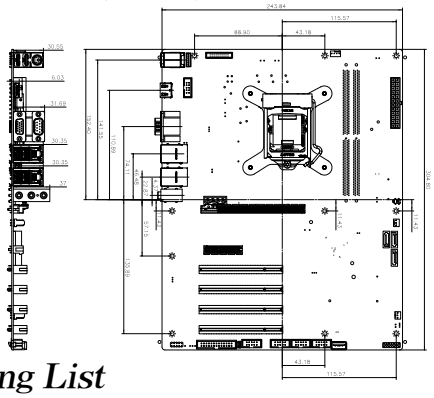

Packing List

1 x IMBA-H112 single board computer	2 x SATA cable
1 x I/O shielding	1 x QIG

Ordering Information

Part No.	Description
IMBA-H112-R10	ATX Motherboard supports 14nm LGA1151 6th/7th Generation Intel® Core™ i7/i5/i3, Celeron® and Pentium® processor, DDR4, Dual Independent Displays VGA and HDMI, Dual Intel® GbE LAN, USB 3.2, SATA 6Gb/s, HD Audio and RoHS
IMBA-H112-ECO-R10	ATX Motherboard supports 14nm LGA1151 6th/7th Generation Intel® Core™ i7/i5/i3, Celeron® and Pentium® processor, DDR4, Dual Independent Displays VGA and HDMI, Dual Intel® GbE LAN, USB 3.2, SATA 6Gb/s, HD Audio, ECO packing and RoHS (10 pcs/pack)
19800-000049-RS	LPT flat cable, 240mm, P=2.54
19800-000075-RS	PS/2 KB/MS cable with bracket, 220mm, P=2.0
19800-020100-100-RS	RS-232 cable, 230mm, P=2.54
32102-000100-200-RS	SATA power cable, MOLEX 5264-4P to SATA15P
32801-000703-500-RS	SATA cable, 2, 500mm, 26AWG, 30V, SATA 7P female 180°+LOCK, one pcs pkg W/ label, 32000-062800-RS substitute, Wins Precision, RoHS
CF-115XC-R10	LGA1155/LGA1156 cooler kit, 1U chassis compatible, 45W
CF-115XD-R10	LGA1155/LGA1156 cooler kit, 1U chassis compatible, 65W
CF-115XE-R10	High performance LGA1155/LGA1156 cooler kit, 95W
DP-DP-R10	DisplayPort to DisplayPort converter board (for IEI iDP connector)
DP-DVI-R10	DisplayPort to DVI-D converter board (for IEI iDP connector)
DP-HDMI-R10	DisplayPort to HDMI converter board (for IEI iDP connector)
DP-LVDS-R10	DisplayPort to 24-bit dual-channel LVDS converter board (for IEI iDP connector)
DP-VGA-R10	DisplayPort to VGA converter board (for IEI iDP connector)
TPM-IN02-R20	20-pin Infineon TPM 2.0 module, software management tool, firmware v5.5

IMBA-H110

ATX motherboard supports 14nm LGA1151 6th Generation Intel® Core™ i7/i5/i3, Celeron® and Pemtium® processor, DDR4, dual independent displays DVI-I/HDMI/ iDP, dual Intel® GbE LAN, USB 3.2 Gen 1 (5Gb/s), SATA 6Gb/s, HD Audio and RoHS

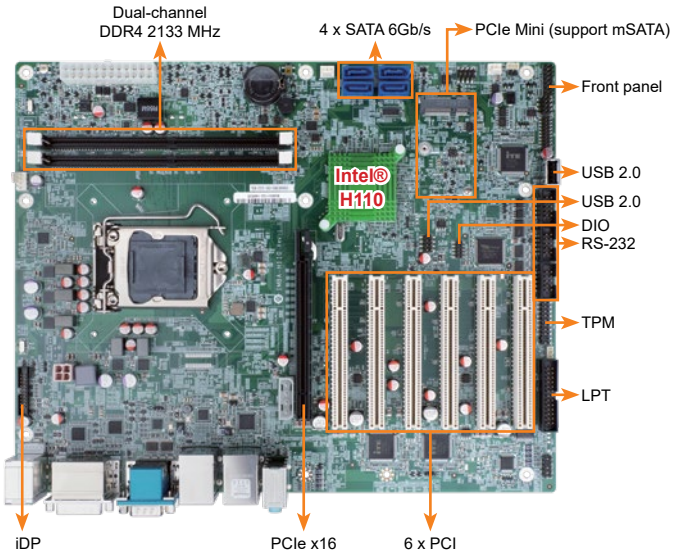

Multiple PCI Expansion Support

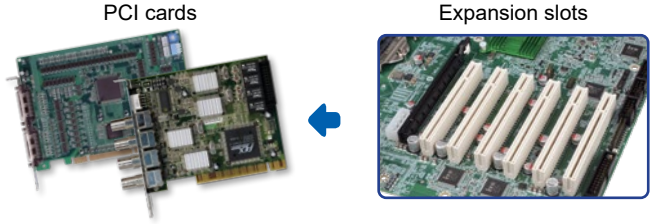



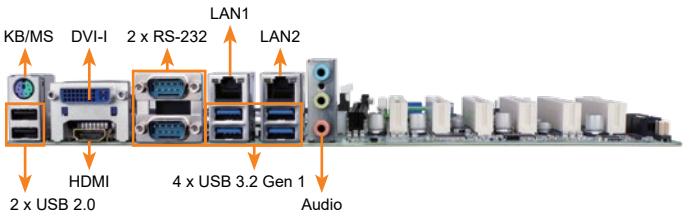



Specifications

- CPU
  LGA 1151 socket supports Intel® 6th/7th generation Core™ i7/i5/i3, Pentium® or Celeron® processor
- Chipset
  Intel® H110
- Memory
  Two 288-pin 2133 MHz dual-channel DDR4 SDRAM unbuffered DIMMs support up to 64 GB
- BIOS
  UEFI BIOS
- Graphics Engine
  Intel® HD Graphics Gen 9 engine with 16 low-power execution units supports DX2015, OpenGL 5.X and OpenCL2.x, ES 2.0
- Display Output
  Dual independent display
  1 x DVI-I (up to 1920x1200@60Hz)
  1 x HDMI 1.4 (up to 4096x2160@24Hz)
  1 x iDP interface for HDMI, LVDS, VGA, DVI, DP (up to 3840x2160@60Hz)
- Ethernet
  LAN1: Intel® I219LM PCIe controller
  LAN2: Intel® I211 PCIe controller
- External I/O Interface
  4 x USB 3.2 Gen 1 (5Gb/s)
  2 x USB 2.0
  2 x RS-232
- Internal I/O Interface
  1 x KB/MS (1x6 pin)
  1 x LPT (2x13 pin, P=2.54)
  1 x RS-232/422/485 (2x5 pin, P=2.54)
  1 x USB 2.0 (180° Type-A)
  2 x RS-232 (2x5 pin, P=2.54)
  2 x USB 2.0 (2x4 pin, P=2.54)
  4 x SATA 6Gb/s
- SMBus
  1 x SMBus (1x4 pin)
- I²C
  1 x I²C (1x4 pin)
- TPM
  1 x TPM (2x10 pin)
- Audio
  Realtek ALC888S HD Audio codec supports 7.1-channel
  3 x Audio jacks (line-out, line-in, mic-in) on rear IO
  1 x Front audio (2x5 pin)
- Front Panel
  1 x Front panel (2x7 pin, power LED, HDD LED, speaker, power button, reset button)
- LAN LED: 2 x LAN LED (1x2 pin)
- Expansion
  1 x Full-size PCIe Mini card slot (support mSATA)
  1 x PCIe x16 slot (Gen3)
  6 x PCI slot
- Watchdog Timer: Software programmable supports 1~255 sec. system reset
- Digital I/O: 8-bit digital I/O (2x5 pin)
- Fan Connector
  1 x CPU smart fan (1x4 pin)
  2 x System fan (1x3 pin)
- Power Supply: ATX/AT power supply
- Power Consumption
  3.3V@1.53A, 5V@2.95A, 12V@8.38A, 5VSB@3.2A
  (Intel® Core™ i7 6700K 4.0GHz CPU with 16GB (two 8GB) 2133 MHz DDR4 memory)
- Operating Temperature: -20°C ~ 60°C
- Storage Temperature: -30°C ~ 70°C
- Operating Humidity: 5% ~ 95%, non-condensing
- Dimensions: 244mm x 305mm
- Weight: GW: 1200g / NW: 700g
- CE/FCC compliant

Features

- LGA 1151 Intel® 6th/7th generation Core™ i7/i5/i3, Pentium® or Celeron® processor supported
- Dual-channel DDR4 2133 MHz
- Support dual displays with DVI-I/HDMI/iDP
- Support USB 3.2 Gen 1 (5Gb/s) and SATA 6Gb/s

Packing List

1 x IMBA-H110 single board computer	2 x SATA cable
1 x I/O shielding	1 x QIG

Ordering Information

Part No.	Description
IMBA-H110-R10	ATX motherboard supports 14nm LGA1151 6th Generation Intel® Core™ i7/i5/i3, Celeron® and Pemtium® processor, DDR4, dual independent displays DVI-I/HDMI/iDP, dual Intel® GbE LAN, SATA 6Gb/s, USB 3.2 Gen 1 (5Gb/s), HD Audio and RoHS
IMBA-H110-ECO-R10	ATX Motherboard supports LGA1151 6th Generation Intel® Core i7/i5/i3, Celeron® Pemtium® processor,DDR4,Dual Independent Displays DVI-I/HDMI/iDP, Dual®Intel GbE LAN, USB 3.2, SATA 6Gb/s,HD Audio,ECO Packing, RoHS (10 pcs/pack)
19800-000049-RS	LPT flat cable, 240mm, P=2.54
19800-000075-RS	PS/2 KB/MS cable with bracket, 220mm, P=2.0
19800-020100-100-RS	RS-232 cable, 230mm, P=2.54
32102-000100-200-RS	SATA power cable, MOLEX 5264-4P to SATA15P
CF-115XC-R10	LGA1155/LGA1156 cooler kit, 1U chassis compatible, 45W
CF-115XD-R10	LGA1155/LGA1156 cooler kit, 1U chassis compatible, 65W
CF-115XE-R10	High performance LGA1155/LGA1156 cooler kit, 95W
DP-DP-R10	DisplayPort to DisplayPort converter board (for IEI iDP connector)
DP-DVI-R10	DisplayPort to DVI-D converter board (for IEI iDP connector)
DP-HDMI-R10	DisplayPort to HDMI converter board (for IEI iDP connector)
DP-LVDS-R10	DisplayPort to 24-bit dual-channel LVDS converter board (for IEI iDP connector)
DP-VGA-R10	DisplayPort to VGA converter board (for IEI iDP connector)
TPM-IN02-R20	20-pin Infineon TPM 2.0 module, software management tool, firmware v5.5

IMBA-H810

ATX motherboard supports 22nm LGA 1150 4th generation Intel® Core™ i7/i5/ i3, Pentium® and Celeron® CPU with Intel® H81, DDR3, VGA/DVI-D/iDP, dual Intel® PCIe GbE, USB 3.2 Gen 1 (5Gb/s), SATA 6Gb/s, HD Audio and RoHS

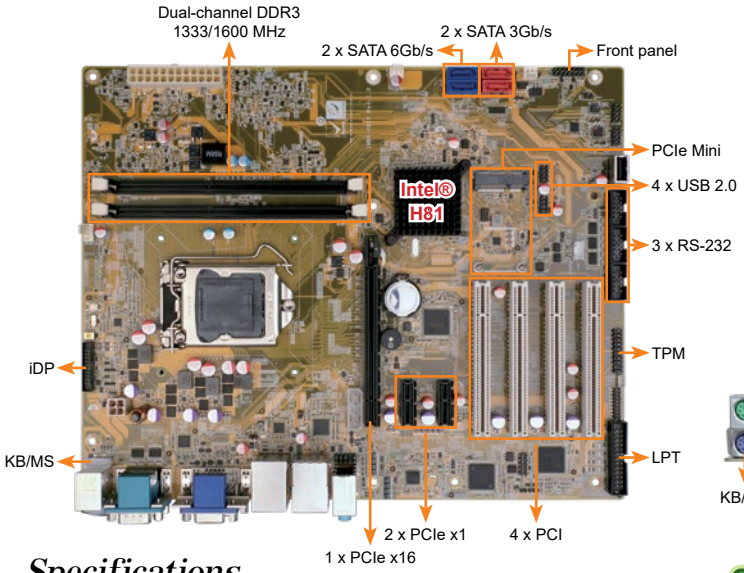

PCIe Mini Add-on Value

IEI USB 3.2 Gen 1 (5Gb/s) Expanded Solution

The MPCIE-USB3 board can be installed to add two additional SuperSpeed USB 3.2 Gen 1 (5Gb/s) ports for the motherboard via the PCIe Mini slot.

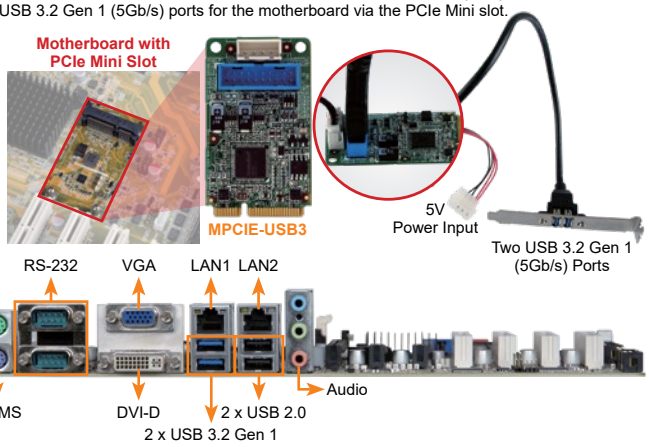



Specifications

- CPU
  LGA1150 Intel® Core™ i7/i5/i3, Pentium® and Celeron® processor supported
- Chipset
  Intel® H81
- Memory
  Two 240-pin 1600/1333 MHz dual-channel DDR3 SDRAM ECC and non-ECC unbuffered DIMMs support up to 16GB
- BIOS
  UEFI BIOS
- Graphics Engine
  Intel® HD Graphics Gen 7.5 supports DX11.1 and OpenCL 1.2, OpenGL 3.2 Full MPEG2, VC1, AVC Decode
- Display Output
  Dual independent display
  1 x VGA (up to 1920x1200@60 Hz)
  1 x DVI-D (up to 2560x1600@60 Hz)
  1 x iDP interface for HDMI, LVDS, VGA, DVI, DP (up to 3840x2160@60 Hz)
- Ethernet
  LAN1: Intel® I217-LM with Intel® AMT9.0 support
  LAN2: Intel® I211-AT PCIe Controller
- External I/O Interface
  1 x KB/MS
  2 x RS-232
  2 x USB 2.0
  2 x USB 3.2 Gen 1 (5Gb/s)
- Internal I/O Interface
  1 x KB/MS (1x6 pin)
  1 x LPT (2x13 pin)
  1 x mSATA (share with SATA4)
  1 x RS-422/485 (1x4 pin, P=2.0)
  2 x SATA 6Gb/s (SATA1, SATA2) (AHCI supported, no RAID) (Blue)
  1 x USB 2.0 (180° Type-A)
  2 x SATA 3Gb/s (SATA3, SATA4) (Red)
  3 x RS-232 (2x5 pin, P=2.54)
  4 x USB 2.0 (2x4 pin, P=2.54)
- Audio
  Realtek ALC888S HD Audio codec supports 7.1-channel
  3 x Audio jacks (line-out, line-in, mic-in) on rear IO
  1 x Front audio (2x5 pin)
- Front Panel
  1 x Front panel (2x7 pin, power LED, HDD LED, speaker, power button, reset button)
- LAN LED
  2 x LAN LED (1x2 pin)
- TPM
  1 x TPM (2x10 pin)
- SMBus
  1 x SMBus (1x4 pin)
- I²C
  1 x I²C (1x4 pin)
- Infrared Interface
  1 x Infrared Interface (1x5 pin)
- Expansion
  1 x Full-size PCIe Mini card slot (support mSATA)
  1 x PCIe x16
  2 x PCIe x1
  4 x PCI
- Watchdog Timer
  Software programmable supports 1~255 sec. system reset
- Digital I/O: 8-bit digital I/O (2x5 pin)
- Fan Connector
  1 x CPU smart fan (1x 4 pin)
  1 x System fan (1x 3 pin)
- Chassis Intrusion Detection: 1 x Chassis intrusion connector (1x2 pin)
- Power Supply: ATX power supply, ATX/AT mode support
- Power Consumption
  3.3V@0.83A, 5V@2.2A, 12V@3.88A, 5VSB@0.3A
  (Intel® Core™ i7-4770K 3.90GHz CPU with 8 GB (two 4 GB) 1333 MHz DDR3 memory)
- Operating Temperature: -20°C ~ 60°C
- Storage Temperature: -30°C ~ 70°C
- Operating Humidity: 5% ~ 95%, non-condensing
- Dimensions: 244 mm x 305 mm
- Weight: GW: 1200g / NW: 700g
- CE/FCC compliant

Features

- 4th generation LGA1150 Intel® Core™ i7/i5/i3, Pentium® or Celeron® processor supported
- Dual-channel DDR3 1333/1600 MHz support up to 16 GB
- Intel® HD Graphics technology integrates high-performance graphics and media processing
- USB 3.2 Gen 1 (5Gb/s), and SATA supported
- TPM V1.2 hardware security function supported by TPM module

Packing List

1 x IMBA-H810 single board computer	2 x SATA cable
1 x I/O shielding	1 x QIG

Ordering Information

Part No.	Description
IMBA-H810-R10	ATX motherboard supports 22nm LGA 1150 4th generation Intel® Core™ i7/i5/i3, Pentium® and Celeron® CPU with Intel® H81, DDR3, VGA/DVI-D/iDP, dual Intel® PCIe GbE, SATA 6Gb/s, USB 3.2 Gen 1 (5Gb/s), HD Audio and RoHS
IMBA-H810-ECO-R10	ATX motherboard supports 22nm LGA 1150 4th generation Intel® Core™ i7/i5/i3, Pentium® and Celeron® CPU with Intel® H81, DDR3, VGA/DVI-D/iDP, dual Intel® PCIe GbE, USB 3.2 Gen 1 (5Gb/s), SATA 6Gb/s, HD Audio, ECO packing, RoHS (10 pce/ pack)
19800-000049-RS	LPT flat cable, 240mm, P=2.54
19800-000075-RS	PS/2 KB/MS cable with bracket, 220mm, P=2.0
19800-010500-200-RS	USB 3.2 Gen 1 (5Gb/s) cable with bracket, 450mm
19800-020100-100-RS	RS-232 cable with bracket, Dual 10-pin to dual DB-9, 230mm, P=2.54
32102-000100-200-RS	SATA power cable, MOLEX 5264-4P to SATA15P
32205-001203-100-RS	RS-232 cable with bracket, Dual 10-pin to dual DB-9, 230mm, P=2.54
32205-003800-200-RS	RS-422/485 cable, 200mm, P=2.0
CF-115XA-R10	High performance LGA1155/LGA1156 cooler kit, 1U chassis compatible, 73W
CF-115XE-R10	High performance LGA1155/LGA1156 cooler kit, 95W
DP-DP-R10	DisplayPort to DisplayPort converter board (for IEI iDP connector)
DP-DVI-R10	DisplayPort to DVI-D converter board (for IEI iDP connector)
DP-HDMI-R10	DisplayPort to HDMI converter board (for IEI iDP connector)
DP-LVDS-R10	DisplayPort to 24-bit dual-channel LVDS converter board (for IEI iDP connector)
DP-VGA-R10	DisplayPort to VGA converter board (for IEI iDP connector)
TPM-IN01-R20	20-pin Infineon TPM module, software management tool, firmware v3.17

IMBA-C2260-i2-R11

ATX motherboard supports 22nm LGA1150 Intel® Xeon E3, Core™ i3, Pentium® and Celeron®, DDR3, VGA, dual Intel® PCIe GbE, USB 3.2 Gen 1 (5Gb/s), SATA 6Gb/s, iRIS-2400 and RoHS

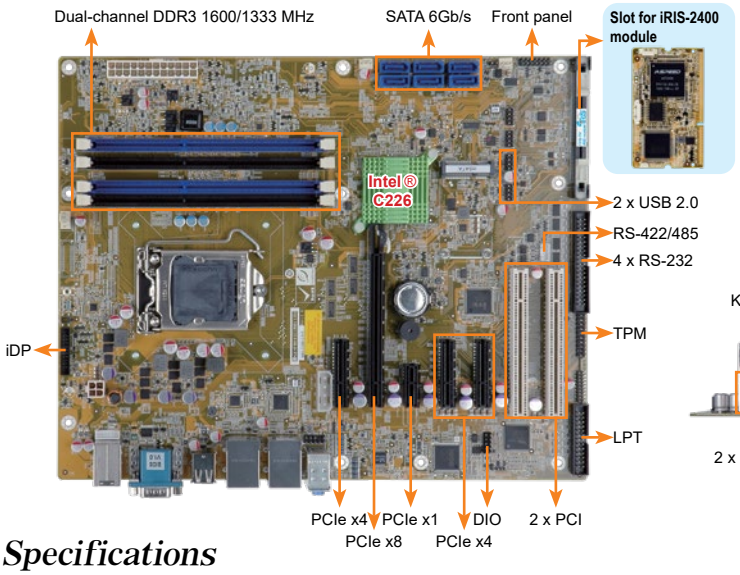

Fully Jumper-less Support

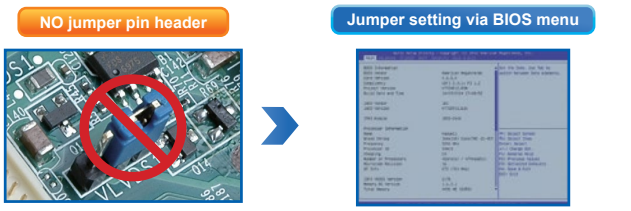

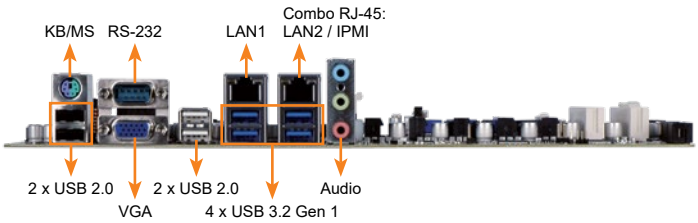

IPMI 2.0 Compliant

DDR3 1600 | Jumper-less | USB 3.2 | SATA 6Gb/s | PCIe GbE | mSATA | Native PCIe Gen.3

Specifications

- CPU
  LGA1150 Intel® Xeon® E3, Core™ i3, Pentium® or Celeron® processor supported
- Chipset
  Intel® C226
- Memory
  Four 240-pin 1600/1333 MHz dual-channel DDR3 & DDR3L SDRAM ECC and non-ECC unbuffered DIMMs support up to 32 GB
- BIOS
  UEFI BIOS
- Ethernet
  LAN1: Intel® I217LM with Intel® AMT 9.0 support
  LAN2: Intel® I210-AT PCIe controller with NCSI support
- Graphics Engine
  Intel® HD Graphics Gen 7.5 supports DX11.1 and OpenCL 1.2, OpenGL 3.2
  Full MPEG2, VC1, AVC Decode
- Display Output
  Triple independent display
  1 x VGA (up to 1920x1200@60 Hz)
  1 x iDP interface for HDMI, LVDS, VGA, DVI, DP (up to 3840x2160@60 Hz)
- Audio
  Realtek ALC888S HD Audio codec supports 7.1-channel
  3 x Audio jacks (line-out, line-in, mic-in) on rear IO
  1 x Front audio (2x5 pin)
- External I/O Interface
  1 x KB/MS
  1 x RS-232
  4 x USB 2.0
  4 x USB 3.2 Gen 1 (5Gb/s)
- Internal I/O Interface
  1 x KB/MS (1x6 pin)
  1 x LPT (2x13 pin, P=2.54)
  1 x mSATA (colay SATA 6)
  6 x SATA 6Gb/s (RAID 0/1/5/10 supported)
  1 x RS-422/485 (1x4 pin, P=2.0)
  4 x RS-232 (2x20 pin, P=2.54)
  4 x USB 2.0 (2x4 pin,P=2.54)
- Front Panel
  1 x Front panel (2x7 pin, power LED, HDD LED, speaker, power button, reset button)
- LAN LED
  2 x LAN LED (1x2 pin)
- TPM
  1 x TPM (2x10 pin)
- SMBus
  1 x SMBus (1x4 pin)
- I²C
  1 x I²C (1x4 pin)
- iRIS Remote Management Module: 1 x iRIS-2400 slot
- Expansion
  1 x PCIe x16 slot
  3 x PCIe x4 slot (support PCIe x1)
  Default setting: 1 x PCIe x8 Gen 3 + 2 x PCIe x4 Gen 3 signal
  Optional setting: 1 x PCIe x16 Gen 3 by BIOS setting
  1 x PCIe x1 slot
  2 x PCI slot
- Watchdog Timer: Software programmable, support 1~255 sec. system reset
- Digital I/O: 8-bit digital I/O (2x5 pin)
- Fan Connector
  1 x CPU fan (1x4 pin)
  2 x System fan (1x3 pin)
- Power Supply: ATX power supply
- Power Consumption
  3.3V@0.57A, 5V@4.50A, 12V@0.14A, Vcore_12V@5.20A, 5VSB@0.19A
  (Intel® E3-1240 v3 3.4GHz CPU with 16 GB (4x4 GB) 1333 MHz DDR3 memory)
- Operating Temperature: -20°C ~ 60°C
- Storage Temperature: -30°C ~ 70°C
- Operating Humidity: 5% ~ 95%, non-condensing
- Dimensions: 244mm x 305mm
- Weight: GW: 1200g / NW: 700g
- CE/FCC compliant

Features

- LGA1150 Intel® Xeon® E3/Core™ i3/Pentium®/Celeron® processor supported
- Dual-channel DDR3 1600/1333 MHz support up to 32 GB
- Intel® PCIe GbE with Intel® AMT 9.0 support
- Support PCI Express generation 3.0 at 8GT/s I/O bandwidth
- USB 3.2 Gen 1 (5Gb/s), SATA 6Gb/s and mSATA supported
- High-speed interface for one PCIe x8 or two PCIe x4 add-on cards
- IEI jumper-less function
- Support IPMI 2.0 via iRIS-2400 module

Packing List

1 x IMBA-C2260-i2 single board computer	2 x SATA cable
1 x I/O shielding	1 x QIG

Ordering Information

Part No.	Description
IMBA-C2260-i2-R11	ATX motherboard supports 22nm LGA1150 Intel® Xeon E3, Core™ i3, Pentium® and Celeron® per Intel® C226, DDR3, VGA, Dual Intel® PCIe GbE, HD Audio, four USB 3.2 Gen 1 (5Gb/s), six SATA 6Gb/s, iRIS-2400 and RoHS
iRIS-2400-R10	IPMI 2.0 adapter card with AST2400 BMC chip for DDR3 SO-DIMM socket interface
19800-000049-RS	LPT flat cable, 240mm, P=2.54
19800-000075-RS	PS/2 KB/MS cable with bracket, 220mm, P=2.0
19800-003100-300-RS	Dual port USB cable with bracket, 300mm, P=2.54
19800-010500-200-RS	USB 3.2 Gen 1 (5Gb/s) cable 457mm with bracket
32102-000100-200-RS	SATA power cable, MOLEX 5264-4P to SATA15P
32205-001203-200-RS	RS-232 cable, 40-pin to four DB-9, 400mm, P=2.54
32205-003800-300-RS	RS-422/485 cable, 200mm, P=2.0
CF-115XA-R10	High performance LGA1155/LGA1156 cooler kit, 1U chassis compatible, 73W
CF-115XE-R10	High performance LGA1155/LGA1156 cooler kit, 95W
DP-DP-R10	DisplayPort to DisplayPort converter board (for IEI iDP connector)
DP-DVI-R10	DisplayPort to DVI-D converter board (for IEI iDP connector)
DP-HDMI-R10	DisplayPort to HDMI converter board (for IEI iDP connector)
DP-LVDS-R10	DisplayPort to 24-bit dual-channel LVDS converter board (for IEI iDP connector)
DP-VGA-R10	DisplayPort to VGA converter board (for IEI iDP connector)
TPM-IN01-R20	20-pin Infineon TPM module, software management tool, firmware v3.17

IMBA-Q870-i2

ATX motherboard supports 22nm LGA1150 Intel® Core™ i7/i5/i3, Pentium® and Celeron® CPU per Intel® Q87, DDR3, triple independent display VGA, DVI-D, HDMI, iDP, USB 3.2 Gen 1 (5Gb/s), SATA 6Gb/s, iRIS-2400

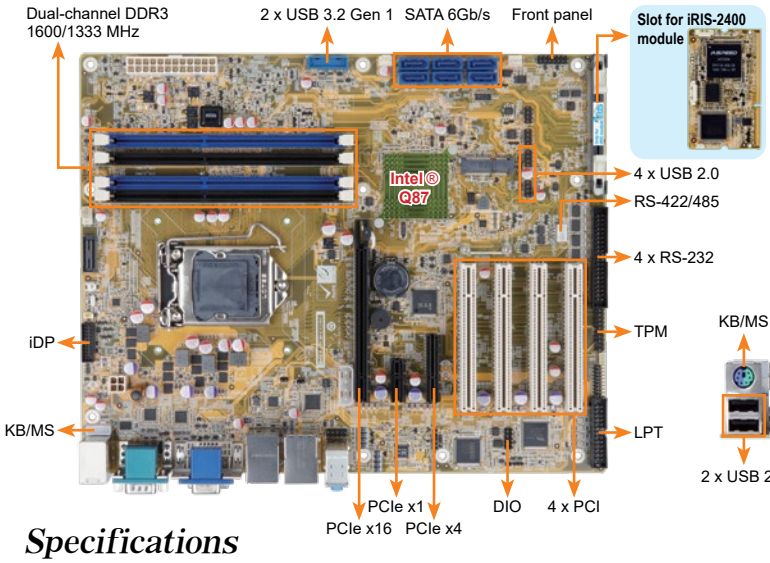

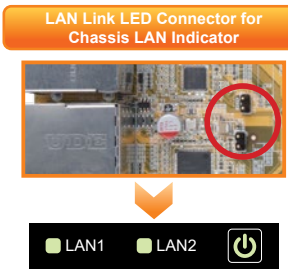

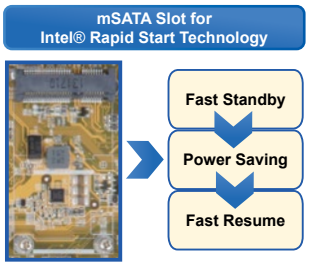

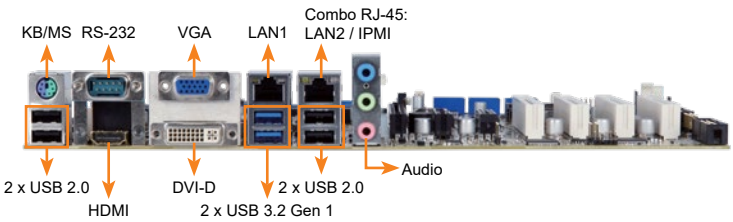

Specifications

- CPU
  LGA1150 4th generation Intel® Core™ i7/i5/i3, Pentium® or Celeron® processor supported
- Chipset
  Intel® Q87
- Memory
  Four 240-pin 1600/1333 MHz dual-channel DDR3 & DDR3L SDRAM unbuffered DIMMs support up to 32 GB
- BIOS
  UEFI BIOS
- Ethernet
  LAN1: Intel® I217LM with Intel® AMT 9.0 support
  LAN2: Intel® I210-AT PCIe controller with NCSI support
- Graphics Engine
  Intel® HD Graphics Gen 7.5 supports DX11.1 and OpenCL 1.2, OpenGL 3.2
  Full MPEG2, VC1, AVC Decode
- Display Output
  Triple independent display
  1 x VGA (up to 1920x1200@60 Hz)
  1 x DVI-D (up to 2560x1600@60 Hz)
  1 x HDMI (up to 2560x1600@60 Hz)
  1 x iDP interface for HDMI, LVDS, VGA, DVI, DP (up to 3840x2160@60 Hz)
- Audio
  Realtek ALC888S HD Audio codec supports 7.1-channel
  3 x Audio jacks (line-out, line-in, mic-in) on rear IO
  1 x Front audio (2x5 pin)
- External I/O Interface
  1 x KB/MS
  1 x RS-232
  2 x USB 3.2 Gen 1 (5Gb/s)
  4 x USB 2.0
- Internal I/O Interface
  1 x KB/MS (1x6 pin)
  1 x LPT (2x13 pin, P=2.54)
  1 x mSATA (colay SATA 6)
  1 x RS-422/485 (1x4 pin,P=2.54)
  2 x USB 3.2 Gen 1 (5Gb/s) (2x10 pin, P=2.0)
  4 x RS-232 (2x20 pin,P=2.54)
  4 x USB 2.0 (2x4 pin, P=2.54)
  6 x SATA 6Gb/s (RAID 0/1/5/10 supported)
- Front Panel
  1 x Front panel (2x7 pin, power LED, HDD LED, speaker, power button, reset button)
- LAN LED
  2 x LAN LED (1x2 pin)
- TPM
  1 x TPM (2x10 pin)
- SMBus
  1 x SMBus (1x4 pin)
- I²C
  1 x I²C (1x4 pin)
- iRIS Remote Management Module: 1 x iRIS-2400 slot
- Expansion
  1 x PCIe x16 slot (Gen 3)
  1 x PCIe x1 slot
  1 x PCIe x4 slot
  4 x PCI slots
- Watchdog Timer
  Software programmable, support 1~255 sec. system reset
- Digital I/O: 8-bit digital I/O (2x5 pin)
- Fan Connector
  1 x CPU smart fan (1x4 pin)
  2 x System fan (1x3 pin)
- Power Supply: ATX Power Supply
- Power Consumption
  3.3V@0.66A, 5V@4.34A, 12V@0.16A, Vcore_12V@4.01A, 5VSB@0.21A
  (Intel® Core™ i7-4770K 3.90 GHz CPU with 16 GB (4x4 GB) 1333 MHz DDR3 memory)
- Operating Temperature: -20°C ~ 60°C
- Storage Temperature: -30°C ~ 70°C
- Operating Humidity: 5% ~ 95%, non-condensing
- Dimensions: 244mm x 305mm
- Weight: GW: 1200g / NW: 700g
- CE/FCC compliant



Features

- LGA1150 4th generation Intel® Core™ i7/i5/i3, Pentium® or Celeron® processor supported
- Dual-channel DDR3 1600/1333 MHz
- Intel® PCIe GbE with Intel® AMT 9.0 support
- Support triple independent display with HDMI, DVI and VGA and iDP
- Support PCI Express generation 3.0 at 8GT/s I/O bandwidth
- USB 3.2 Gen 1 (5Gb/s) and SATA 6Gb/s mSATA supported
- IEI jumper-less function
- Support IPMI 2.0 via iRIS-2400 module

Packing List

1 x IMBA-Q870-i2 single board computer	2 x SATA cable
1 x I/O shielding	1 x QIG

Ordering Information

Part No.	Description
IMBA-Q870-i2-R10	ATX motherboard supports 22nm LGA1150 Intel® Core™ i7/i5/i3, Pentium® and Celeron® CPU per Intel® Q87, DDR3, triple independent display VGA/DVI-D/HDMI/iDP, dual Intel® GbE, USB 3.2 Gen 1 (5Gb/s), SATA 6Gb/s, audio, iRIS-2400 and RoHS
IMBA-Q870-ECO-R10	LGA1150 Intel® Core™ i7/i5/i3, Pentium® and Celeron® CPU per Intel® Q87, DDR3, triple independent display VGA, DVI-D, HDMI, iDP, USB 3.2 Gen 1 (5Gb/s), SATA 6Gb/s, ECO packing, RoHS (10 pcs/pack)
iRIS-2400-R10	IPMI 2.0 adapter card with AST2400 BMC chip for DDR3 SO-DIMM socket interface
19800-000049-RS	LPT flat cable, 240mm, P=2.54
19800-000075-RS	PS/2 KB/MS cable with bracket, 220mm, P=2.0
19800-003100-300-RS	Dual port USB cable with bracket, 300mm, P=2.54
19800-010500-200-RS	USB 3.2 Gen 1 (5Gb/s) cable 457mm with bracket
32102-000100-200-RS	SATA power cable, MOLEX 5264-4P to SATA15P
32205-001203-200-RS	RS-232 cable, 40-pin to four DB-9, 400mm, P=2.54
32205-003800-300-RS	RS-422/485 cable, 200mm, P=2.0
CF-115XA-R10	High performance LGA1155/LGA1156 cooler kit, 1U chassis compatible, 73W
CF-115XE-R10	High performance LGA1155/LGA1156 cooler kit, 95W
DP-DP-R10	DisplayPort to DisplayPort converter board (for IEI iDP connector)
DP-DVI-R10	DisplayPort to DVI-D converter board (for IEI iDP connector)
DP-HDMI-R10	DisplayPort to HDMI converter board (for IEI iDP connector)
DP-LVDS-R10	DisplayPort to 24-bit dual-channel LVDS converter board (for IEI iDP connector)
DP-VGA-R10	DisplayPort to VGA converter board (for IEI iDP connector)
TPM-IN01-R20	20-pin Infineon TPM module, software management tool, firmware v3.17

IMB-H110

microATX Motherboard supports 14nm LGA1151 Intel® Core™ i7/i5/i3, Pentium® or Celeron® processor, DDR4, Dual Independent Displays VGA/ DVI-I/LVDS, Dual GbE LAN, USB 3.2 Gen 1 (5Gb/s), SATA 6Gb/s, HD Audio and RoHS

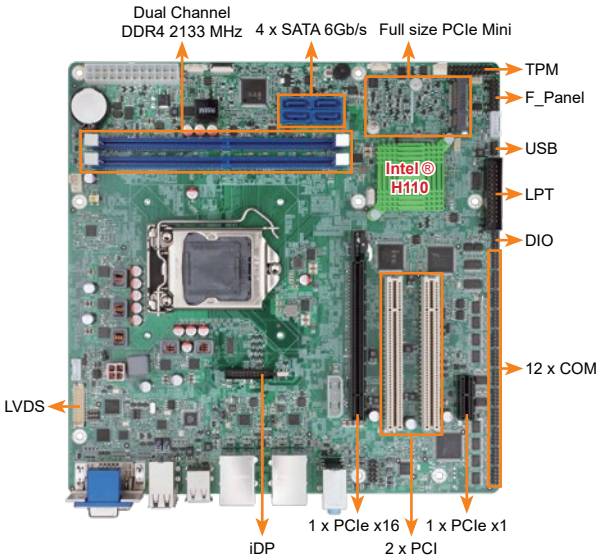

Multiple Expansion Support



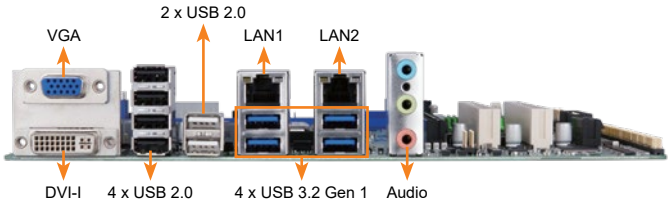



Specifications

- CPU
  LGA 1151 socket supports Intel® 6th/7th generation Core™ i7/i5/i3, Pentium® or Celeron® processor
- Chipset
  Intel® skylake H110
- Memory
  Two 288-pin 2133MHz Dual-Channel DDR4 SDRAM Unbuffered DIMM supported up to 64GB
- BIOS
  UEFI BIOS
- Graphics Engine
  Intel® HD Graphics Gen 9 Engines with Low power 16 execution unit, supports DX2015, OpenGL 5.X and OpenCL2.x, ES 2.0
- Display Output
  Dual independent display
  1 x VGA (up to 1920x1200@60Hz)
  1 x DVI-I (up to 1920x1200@ 60Hz)
  1 x 18/24-bit dual-channel LVDS (up to 1920x1200@60Hz)
  1 x iDP interface for HDMI, LVDS, VGA, DVI, DP (up to 3840x2160@60Hz)
- Ethernet
  LAN1: RTL 8111GN controller
  LAN2: RTL 8111GN controller
- External I/O Interface
  4 x USB 3.2 Gen 1 (5Gb/s)
  6 x USB 2.0
- Internal I/O Interface
  1 x KB/MS (1x6 pin)
  1 x LPT (2x13 pin, P=2.54)
  4 x SATA 6Gb/s
  2 x RS-232/422/485 (2x5 pin, P-=2.0)
  2 x USB 2.0 (2x4 pin, P=2.0)
  10 x RS-232 (2x5 pin, P=2.0)
- SMBus
  1 x SMBus (1x4 pin)
- TPM
  1 x TPM (2x10 pin)
- Audio
  Realtek ALC888S HD Audio codec supports 7.1-channel
  3 x Audio jacks (line-out, line-in, mic-in) on rear IO
  1 x Front audio (2x5 pin)
- Front Panel
  1 x Front Panel (2x7 pin, Power LED, HDD LED, Speaker, Power Button, Reset Button)
- LAN LED
  2 x LAN LED (1x2 pin)
- I²C
  1 x I²C (1x4 pin)
- Expansion
  1 x PCIe x16 slot (Gen3)
  1 x PCIe x1 slot (Gen2)
  1 x Full/Half-size PCIe Mini card slot
  2 x PCI slot
- Watchdog Timer
  Software programmable, supports 1~255 sec. system reset
- Digital I/O: 8-bit Digital I/O (2x5 pin)
- Fan Connector
  1 x CPU smart fan (1x4 pin)
  1 x System fan (1x3 pin)
- Power Supply: ATX/AT Power Supply
- Power Consumption
  3.3V@ 0.93A, 5V@2.99A, 12V@6.88A, 5VSB@0.02A (Intel® Core™ i7-6700K 4.0GHz CPU with 16GB (two 8GB) 2133 MHz DDR4 memory)
- Operating Temperature: -20°C ~ 60°C
- Storage Temperature: -30°C ~ 70°C
- Operating Humidity: 5% ~ 9%, non-condensing
- Weight: GW: 1200g / NW: 700g
- CE/FCC compliant

Features

- LGA 1151 Intel® 6th/7th generation Core™ i7/i5/i3, Pentium® or Celeron® processor supported
- Dual-channel DDR4 2133MHz support up to 64GB
- Support Dual displays via VGA/DVI-I/LVDS
- USB 3.2 Gen 1 (5Gb/s) and SATA 6Gb/s supported
- 12 COM & 12 USB

Packing List

1 x IMB-H110 motherboard	2 x SATA cable
1 x I/O shielding	1 x QIG

Ordering Information

Part No.	Description
IMB-H110-R10	microATX motherboard supports 14nm LGA1151 Intel® Core™ i7/i5/i3, Pentium® or Celeron® processor supported, DDR4, Dual independent displays VGA/DVI-I/LVDS, Dual GbE LAN, USB 3.2 Gen 1 (5Gb/s), SATA 6Gb/s, HD Audio and RoHS
IMB-H110-ECO-R10	microATX Motherboard supports 14nm LGA1151 6th Generation Intel® Core™ i7/i5/i3, Pentium® or Celeron® processor per Intel® H110, DDR4, VGA/DVI-I/LVDS, Dual GbE LAN, USB 3.2 Gen 1 (5Gb/s), SATA 6Gb/s, HD Audio, ECO Packing and RoHS (10 pcs/pack)
19800-000049-RS	LPT flat cable, 240mm, P=2.54
19800-000075-RS	PS/2 KB/MS cable with bracket, 220mm, P=2.0
19800-000200-100-RS	RS-232 cable with bracket, Dual 10-pin to dual DB-9, 300mm, P=2.0
32102-000100-200-RS	SATA power cable, MOLEX 5264-4P to SATA15P
CF-115XA-R10	High performance LGA1155/LGA1156 cooler kit, 1U chassis compatible, 73W
CF-115XE-R10	High performance LGA1155/LGA1156 cooler kit, 95W
DP-DP-R10	DisplayPort to DisplayPort converter board (for IEI iDP connector)
DP-DVI-R10	DisplayPort to DVI-D converter board (for IEI iDP connector)
DP-HDMI-R10	DisplayPort to HDMI converter board (for IEI iDP connector)
DP-LVDS-R10	DisplayPort to 24-bit dual-channel LVDS converter board (for IEI iDP connector)
DP-VGA-R10	DisplayPort to VGA converter board (for IEI iDP connector)
TPM-IN02-R20	20-pin Infineon TPM 2.0 module, software management tool, firmware v5.5

IMB-Q870-i2

microATX motherboard supports 22nm LGA1150 Intel® Core™ i7/i5/i3, Pentium® and Celeron® CPU per Intel® Q87, DDR3, HDMI, DVI-D, VGA, iDP, USB 3.2 Gen 1 (5Gb/s), SATA 6Gb/s, six serial ports, iRIS-2400

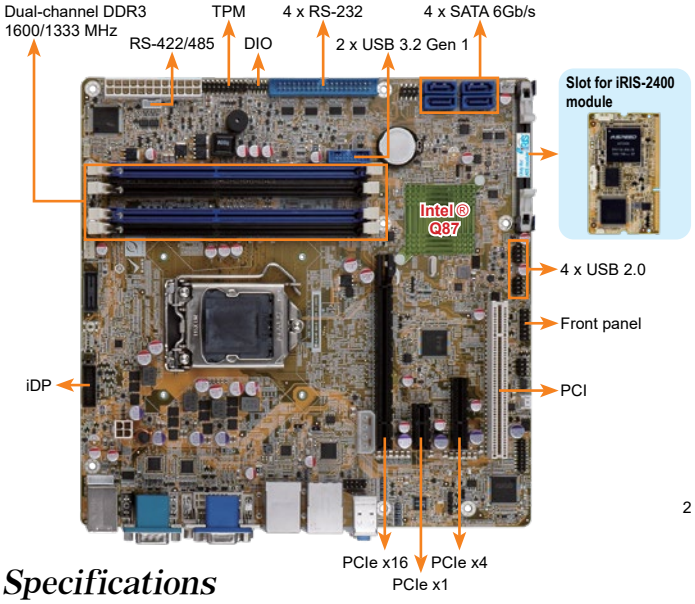

New and More Powerful Graphics

2nd Generation Intel® Core™ Processor (Sandy Bridge)	3rd Generation Intel® Core™ Processor (Ivy Bridge)	4th Generation Intel® Core™ Processor (Haswell)	
Intel® HD Graphics 3000 series	Intel® HD Graphics 4000 series	GT3- Intel® HD Graphics 5000 series	Core i7
Intel® HD Graphics 2000 series	Intel® HD Graphics 2500 series	GT2- Intel® HD Graphics 4000 series	Core i5/ Core i3
Intel® HD Graphics series	Intel® HD Graphics series	GT1- Intel® HD Graphics series	Celeron/ Pentium

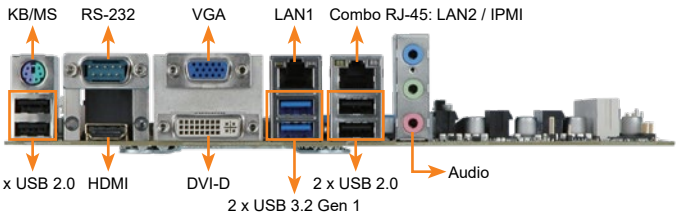

Specifications

- CPU
  LGA1150 Intel® Core™ i7/i5/i3, Pentium® or Celeron® processor supported
- Chipset
  Intel® Q87
- Memory
  Four 240-pin 1600/1333 MHz dual-channel DDR3 & DDR3L SDRAM unbuffered DIMMs
  support up to 32 GB
- BIOS
  UEFI BIOS
- Ethernet
  LAN1: Intel® I217LM with Intel® AMT 9.0 support
  LAN2: Intel® I210-AT PCIe controller with NCSI support
- Graphics Engine
  Intel® HD Graphics Gen 7.5 supports DX11.1 and OpenCL 1.2, OpenGL 3.2
  Full MPEG2, VC1, AVC Decode
- Display Output
  Triple independent display
  1 x VGA (up to 1920x1200@60Hz)
  1 x DVI-D (up to 2560x1600@60Hz)
  1 x HDMI (up to 2560x1600@60Hz)
  1 x iDP interface for HDMI, LVDS, VGA, DVI, DP (up to 3840x2160@60Hz)
- Audio
  Realtek ALC888S HD Audio codec supports 7.1-channel
  3 x Audio jacks (line-out, line-in, mic-in) on rear IO
  1 x Front audio (2x5 pin)
- External I/O Inteface
  1 x KB/MS
  1 x RS-232
  2 x USB 3.2 Gen 1 (5Gb/s)
  4 x USB 2.0
- Internal I/O Interface
  1 x KB/MS (1x6 pin)
  1 x RS-422/485 (1x4 pin, P=2.0)
  2 x USB 3.2 Gen 1 (5Gb/s) (2x10 pin)
  4 x SATA 6Gb/s (RAID 0/1/5/10 supported)
  4 x RS-232 (2x5 pin, P=2.54)
  4 x USB 2.0 (2x4 pin, P=2.54)
- Front Panel
  1 x Front panel (2x7 pin, power LED, HDD LED, speaker, power button, reset button)
- LAN LED
  2 x LAN LED (1x2 pin)
- TPM: 1 x TPM (2x10 pin)
- SMBus: 1 x SMBus (1x4 pin)
- I²C: 1 x I²C (1x4 pin)
- iRIS Remote Management Module: 1 x iRIS-2400 slot
- Expansion
  1 x PCIe x16 slot (Gen 3)
  1 x PCIe x1 slot
  1 x PCIe x4 slot
  1 x PCI slot
- Watchdog Timer
  Software programmable, support 1~255 sec. system reset
- Digital I/O: 8-bit digital I/O (2x5 pin)
- Fan Connector
  1 x CPU smart fan (1x4 pin)
  2 x System smart fan (1x3 pin)
- Power Supply: ATX power supply
- Power Consumption
  3.3V@0.53A, 5V@4.96A, 12V@0.12A, Vcore_12V@3.95A, 5VSB@0.18A
  (Intel® Core™ i7-4770K 3.90 GHz CPU with 16 GB (4x4 GB) 1333 MHz DDR3 memory)
- Operating Temperature: -20°C ~ 60°C
- Storage Temperature: -30°C ~ 70°C
- Operating Humidity: 5% ~ 95%, non-condensing
- Dimensions: 244mm x 244mm
- Weight: GW: 1200g / NW: 700g
- CE/FCC compliant

Features

- LGA1150 4th generation Intel® Core™ i7/i5/i3, Pentium® or Celeron® processor supported
- Dual-channel DDR3 1600/1333 MHz supported
- Intel® PCIe GbE with Intel® AMT 9.0 support
- Support triple display via HDMI, DVI, VGA and iDP
- Support PCI Express generation 3.0 at 8GT/s I/O bandwidth
- USB 3.2 Gen 1 (5Gb/s) and SATA 6Gb/s supported
- IEI jumper-less function
- Support IPMI 2.0 via iRIS-2400 module

Packing List

1 x IMB-Q870-i2 single board computer	2 x SATA cable
1 x I/O shielding	1 x QIG

Ordering Information

Part No.	Description
IMB-Q870-i2-R10	microATX motherboard supports 22nm LGA1150 Intel® Core™ i7/i5/i3/Pentium® and Celeron® CPU per Intel® Q87, DDR3, dual Intel® PCIe GbE, HDMI, DVI-D, VGA, DP, audio, SATA 6Gb/s, USB 3.2 Gen 1 (5Gb/s), six serial ports, iRIS-2400 and RoHS
iRIS-2400-R10	IPMI 2.0 adapter card with AST2400 BMC chip for DDR3 SO-DIMM socket interface
19800-000049-RS	LPT flat cable, 240mm, P=2.54
19800-000075-RS	PS/2 KB/MS cable with bracket, 220mm, P=2.0
19800-003100-300-RS	Dual port USB cable with bracket, 300mm, P=2.54
19800-010500-200-RS	USB 3.2 Gen 1 (5Gb/s) cable with bracket, 450mm
32102-000100-200-RS	SATA power cable, MOLEX 5264-4P to SATA15P
32205-001203-200-RS	RS-232 cable, 40-pin to four DB-9, 400mm, P=2.54
32205-003800-300-RS	RS-422/485 cable, 200mm, P=2.0
CF-115XA-R10	High performance LGA1155/LGA1156 cooler kit, 1U chassis compatible, 73W
CF-115XE-R10	High performance LGA1155/LGA1156 cooler kit, 95W
DP-DP-R10	DisplayPort to DisplayPort converter board (for IEI iDP connector)
DP-DVI-R10	DisplayPort to DVI-D converter board (for IEI iDP connector)
DP-HDMI-R10	DisplayPort to HDMI converter board (for IEI iDP connector)
DP-LVDS-R10	DisplayPort to 24-bit dual-channel LVDS converter board (for IEI iDP connector)
DP-VGA-R10	DisplayPort to VGA converter board (for IEI iDP connector)
TPM-IN01-R20	20-pin Infineon TPM module, software management tool, firmware v3.17

IMB-H810-i2-R11

microATX motherboard supports 22nm LGA1150 Intel® Core™ i7/i5/i3, Pentium®, Celeron® CPU per Intel® H81, DDR3, VGA, dual GbE, LPT, COM, SATA 6Gb/s, iRIS-2400

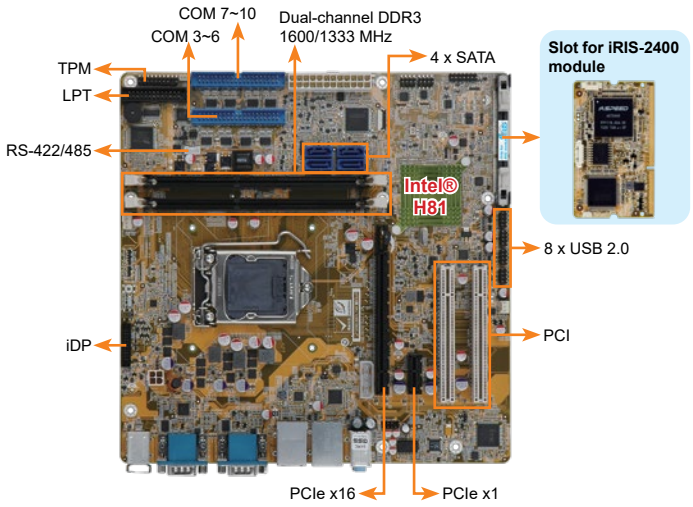

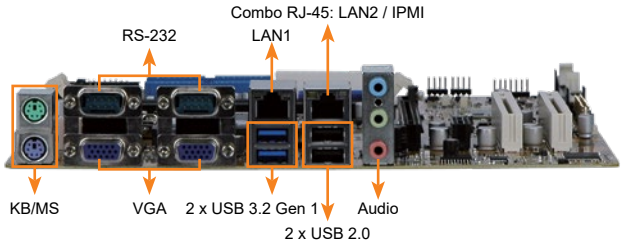

IPMI 2.0 Compliant

DDR3 1600 | USB 3.2 | SATA 6Gb/s | PCIe GbE

Specifications

- CPU
  LGA1150 Intel® Core™ i7/i5/i3, Pentium® or Celeron® processor supported
- Chipset
  Intel® H81
- Memory
  Two 240-pin 1600/1333 MHz dual-channel DDR3 & DDR3L SDRAM unbuffered DIMMs support up to 16 GB
- BIOS
  UEFI BIOS
- Ethernet
  LAN1: Intel® I217LM with Intel® AMT9.0 support
  LAN2: Intel® I210-AT PCIe controller with NCSI support
- Graphics Engine
  Intel® HD Graphics Gen 7.5 supports DX11.1 and OpenCL 1.2, OpenGL 3.2
  Full MPEG2, VC1, AVC Decode
- Display Output
  Dual independent display
  2 x VGA (up to 1920x1200@60Hz)
  1 x iDP interface for HDMI, LVDS, VGA, DVI, DP (up to 3840x2160@60Hz)
- Audio
  Realtek ALC888S HD Audio codec supports 7.1-channel
  3 x Audio jacks (line-out, line-in, mic-in) on rear IO
  1 x Front audio (2x5 pin)
- iRIS Remote Management Module
  1 x iRIS-2400 slot
- TPM
  1 x TPM (2x10 pin)
- SMBus
  1 x SMBus (1x4 pin)
- I²C
  1 x I²C (1x4 pin)
- LAN LED: 2 x LAN LED (1x2 pin)
- External I/O Interface
  1 x KB/MS
  2 x RS-232
  2 x USB 2.0
  2 x USB 3.2 Gen 1 (5Gb/s)
- Internal I/O Interface
  1 x LPT (2x13 pin, P=2.54)
  1 x RS-422/485 (1x4 pin, P=2.0)
  2 x SATA 3Gb/s
  2 x SATA 6Gb/s
  8 x RS-232 (2x20 pin, P=2.54)
  8 x USB 2.0 (2x4 pin, P=2.54)
- Front Panel
  1 x Front panel (2x7 pin, power LED, HDD LED, speaker, power button, reset button)
- Expansion
  1 x PCIe x16 slot (Gen 3)
  1 x PCIe x1 slot
  2 x PCI slot
- Watchdog Timer
  Software programmable, supportS 1~255 sec system reset
- Fan Connector
  1 x CPU smart fan (1x4 pin)
  1 x System smart fan (1x3 pin)
- Power Supply
  ATX power supply
- Power Consumption
  3.3V@0.64A, 5V@4.20A, 12V@0.14A, Vcore_12V@3.88A, 5VSB@0.20A
  (Intel® Core™ i7-4770K 3.90 GHz CPU with 8 GB (two 4 GB) 1333 MHz DDR3 memory)
- Operating Temperature: -20°C ~ 60°C
- Storage Temperature: -30°C ~ 70°C
- Operating Humidity: 5% ~ 95%, non-condensing
- Dimensions: 244mm x 244mm
- Weight: GW: 1200g / NW: 680g
- CE/FCC compliant

Features

- LGA1150 4th generation Intel® Core™ i7/i5/i3, Pentium® or Celeron® processor supported
- Dual-channel DDR3 1333/1600 MHz support up to 16 GB
- Intel® HD Graphics technology integrates high-performance graphics and media processing
- Supports legacy PCI 32-bit 33/66 MHz
- Ten COM ports, USB 3.2 Gen 1 (5Gb/s) and SATA supported
- TPM V1.2 hardware security function supported by TPM module
- Support IPMI 2.0 via iRIS-2400 module
- IEI jumper-less function

Packing List

1 x IMB-H810-i2 single board computer	2 x SATA cable
1 x I/O shielding	1 x QIG

Ordering Information

Part No.	Description
IMB-H810-i2-R11	microATX motherboard supports 22nm LGA1150 Intel® Core™ i7/i5/i3/Pentium® and Celeron® CPU per Intel® H81, DDR3, VGA, Dual Intel® PCIe GbE, USB 2.0, PCI, COM, SATA 6Gb/s, LPT, HD Audio, iRIS-2400 and RoHS
IMB-H810-ECO-R11	LGA1150 Intel® Core™ i7/i5/i3, Pentium® and Celeron® CPU per Intel® H81, DDR3, VGA, Dual PCIe GbE, USB 2.0, COM, LPT, SATA 6Gb/s, HD Audio, ECO packing, RoHS (10 pce/pack)
iRIS-2400-R10	IPMI 2.0 adapter card with AST2400 BMC chip for DDR3 SO-DIMM socket interface
19800-000049-RS	LPT flat cable, 240mm, P=2.54
19800-000075-RS	PS/2 KB/MS cable with bracket, 220mm, P=2.0
19800-003100-100-RS	Dual port USB cable with bracket, 30mm, P=2.54
19800-010500-200-RS	USB 3.2 Gen 1 (5Gb/s) cable with bracket, 450mm
32102-000100-200-RS	SATA power cable, MOLEX 5264-4P to SATA15P
32205-001203-200-RS	RS-232 cable, 40-pin to four DB-9, 400mm, P=2.54
32205-003801-100-RS	RS-232/422/485, RS-422/485 cable, 500mm
CF-115XA-R10	High performance LGA1155/LGA1156 cooler kit, 1U chassis compatible, 73W
CF-115XE-R10	High performance LGA1155/LGA1156 cooler kit, 95W
DP-DP-R10	DisplayPort to DisplayPort converter board (for IEI iDP connector)
DP-DVI-R10	DisplayPort to DVI-D converter board (for IEI iDP connector)
DP-HDMI-R10	DisplayPort to HDMI converter board (for IEI iDP connector)
DP-LVDS-R10	DisplayPort to 24-bit dual-channel LVDS converter board (for IEI iDP connector)
DP-VGA-R10	DisplayPort to VGA converter board (for IEI iDP connector)
TPM-IN01-R20	20-pin Infineon TPM module, software management tool, firmware v3.17

Dimensions (Unit: mm)

IMBA-X570

Preliminary

IMBA-C2360-i2

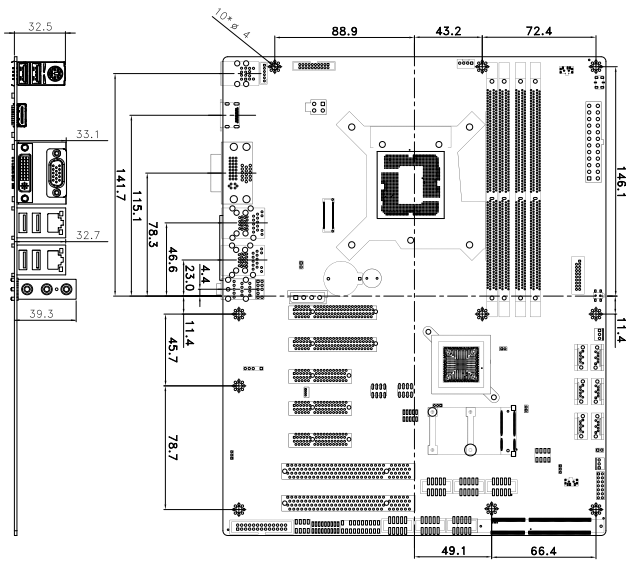

IMBA-Q170-i2

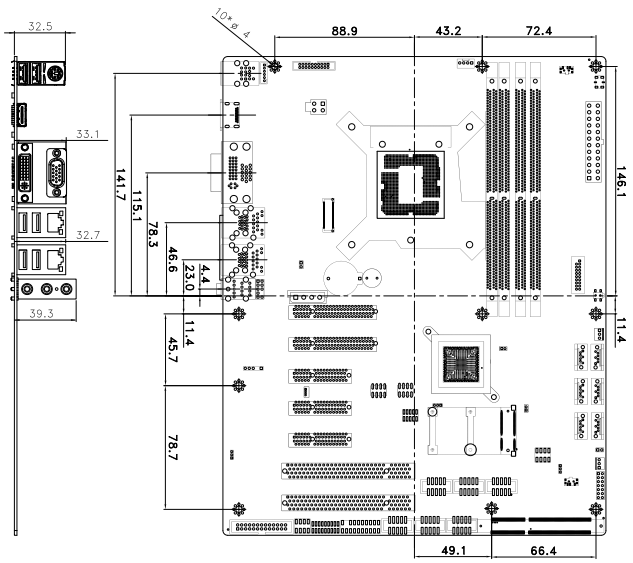

Dimensions (Unit: mm)

IMBA-H110

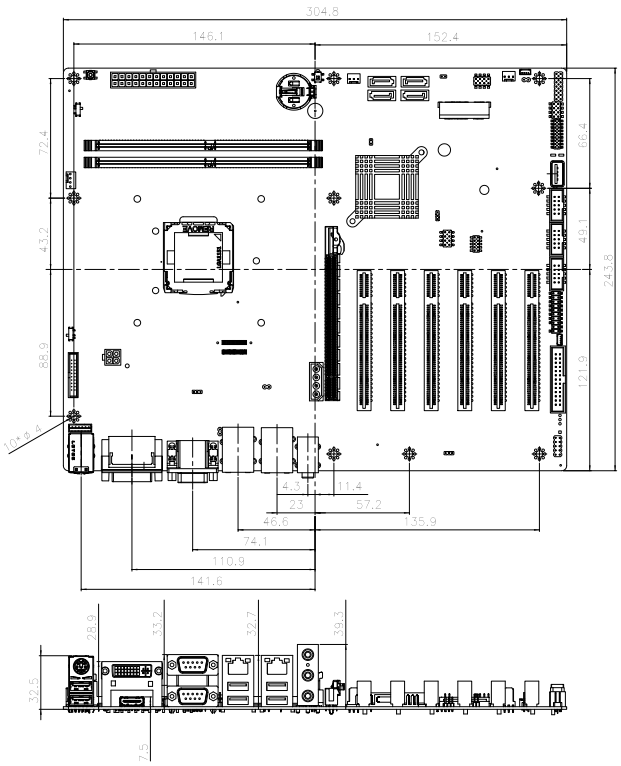

IMBA-C2260-i2-R11

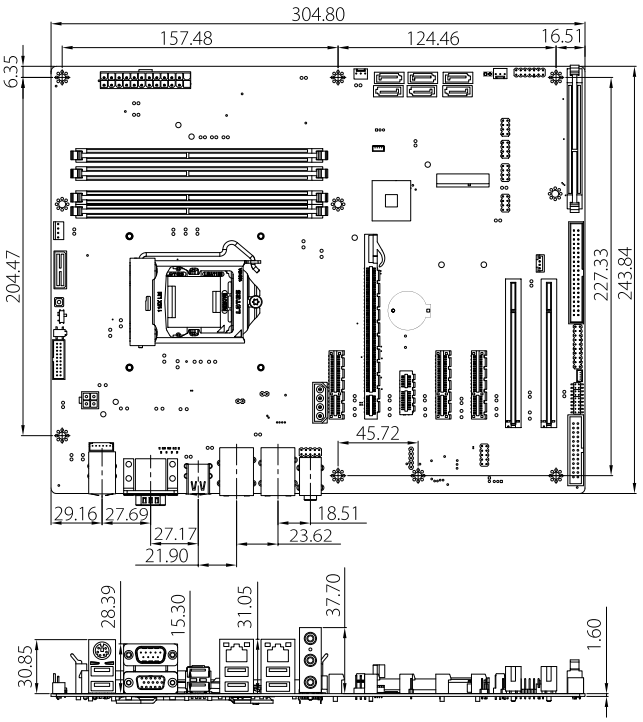

IMBA-H810

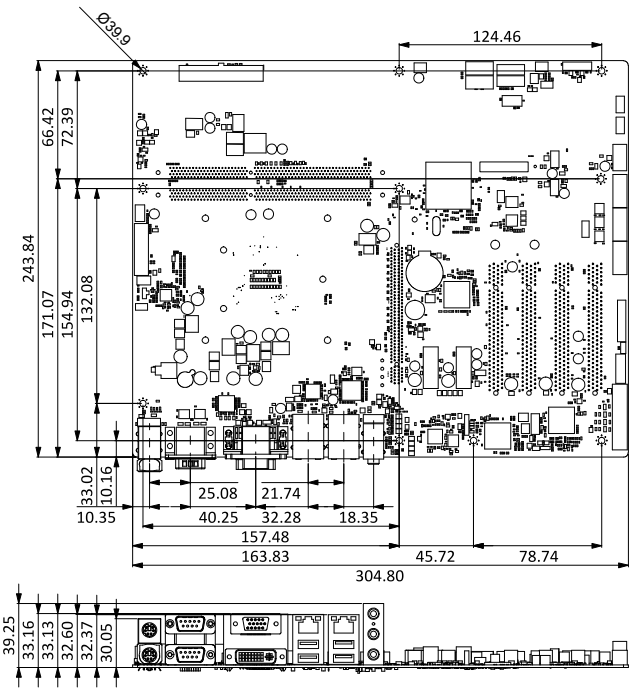

IMBA-Q870-i2

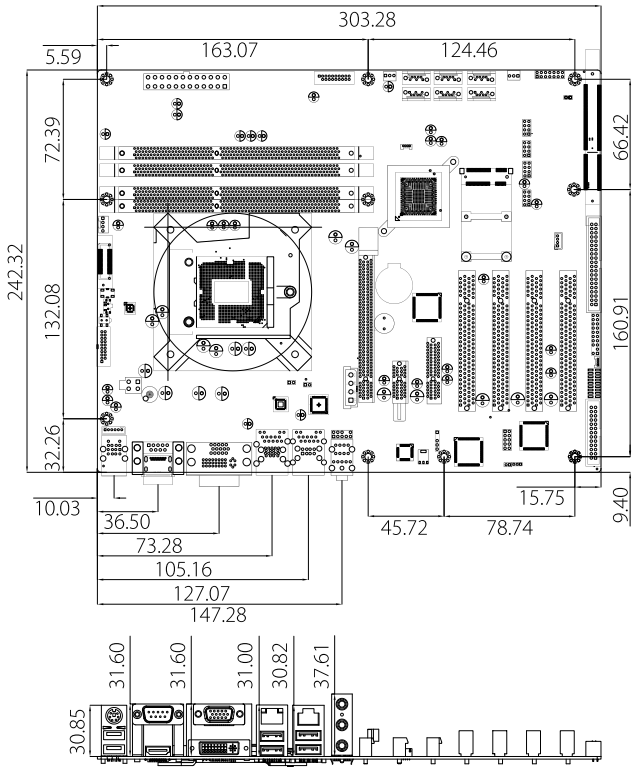

Dimensions (Unit: mm)

IMB-H110

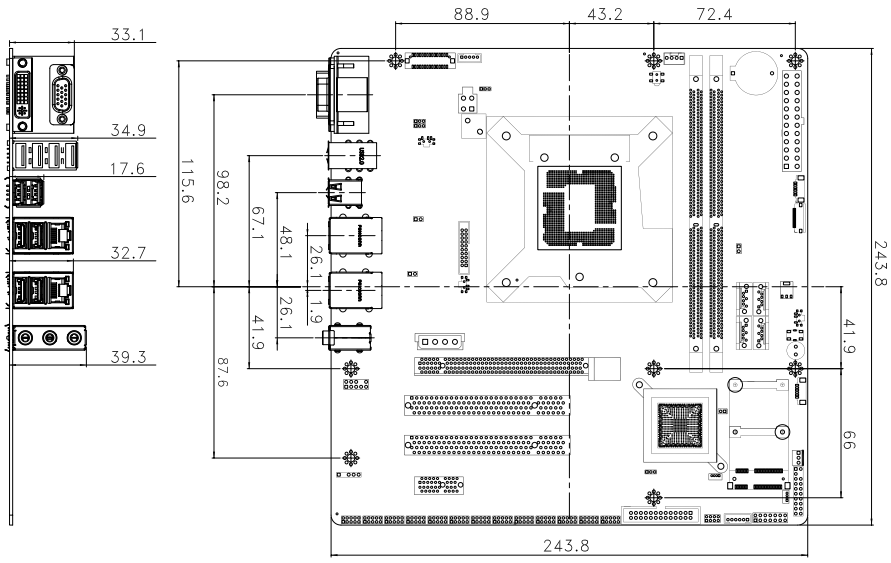

IMB-Q870-i2

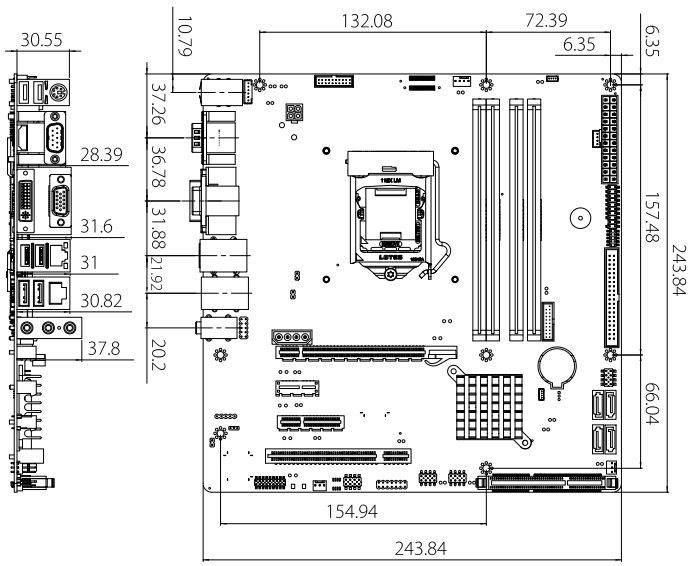

IMB-H810-i2-R11

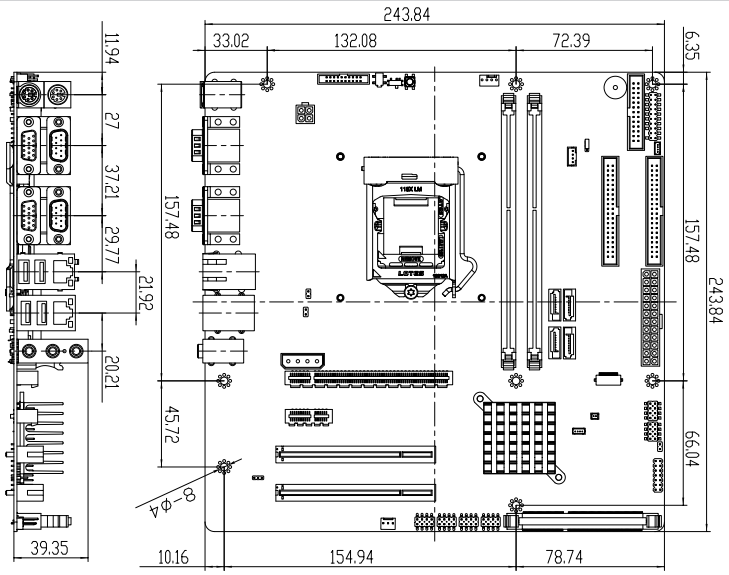

Mini-ITX Selection Guide









Model Name	KINO-EHL	tKINO-ULT6	KINO-DH420	KINO-KX
CPU Socket	On Board	On Board	LGA1200	On Board
CPU Type	Intel Atom® x6000E Series processors, Intel® Pentium® and Celeron® N and J Series processors (Code name: Elkhart Lake)	Intel® 11th Gen. Core™ i7/i5/ i3,Celeron® UP3 processor	10th generation Intel® Core™ i9/i7/5/i3/ Pentium® and Celeron® processor	Zhaoxin Kaixian KX-6000 series 8-core processor Zhaoxin KX-U6580/U6780A on-board SoC
Chipset	Intel Atom® x6000E Series processors, Intel® Pentium® and Celeron® N and J Series processors (Code name: Elkhart Lake)	Intel® 11th Gen. Core™ i7/i5/ i3,Celeron® UP3 processor	Intel® H420E	Zhaoxin ZX-200
Memory	1 x SO-DIMM DDR4 3200MHz, system maximun up to 32GB	2 x SO-DIMM DDR4 3200MHz, system maximun up to 64GB	2 x 260-pin 2933 MHz dual-channel DDR4 SDRAM SO-DIMMs (system Max. 64 GB)	2 x 260-pin 2666 MHz dual-channel DDR4 SDRAM SO-DIMMs (system Max. 64 GB)
Display Interface	Triple independent display 1 x HDMI 1.4b (up to 4096 x 2160@30Hz) 1 x DP 1.4a (up to 4096 x 2160 @60Hz) 1 x eDP / LVDS	Quadruple independent display 1 x DisplayPort 1 x eDP/LVDS (select by switch) 1 x HDMI 2.0 1 x Type-C DP with USB4	Dual independent display 1 x DP 1 x HDMI 1 x internal Type-C DP	Dual independent display 1 x VGA 1 x DVI-I
Ethernet	2 x GPY211 (2.5 GbE) 1 x MARVEL 88E1512 1G PHY (support TSN)	LAN1: Intel® I225V 2.5GbE controller LAN2: Intel® I225V 2.5GbE controller	LAN1: Intel® I225V 2.5GbE controller LAN2: Intel® I225V 2.5GbE controller	LAN1: Realtek RTL8111H PCIe GbE controller LAN2: Realtek RTL8111H PCIe GbE controller
iRIS Remote Management Module	N/A			
I/O Interface	1 x RS-422/485 1 x USB 3.2/2.0 Port (Vertical type-A) 2 x USB 3.2 Gen2 3 x RS-232 6 x USB 2.0	1 x RS-232/422/485 (RS-485 support AFC) 1 x RS-422/485 (RS-485 support AFC) 1 x USB4 4 x RS-232 4 x USB 2.0 4 x USB 3.2 Gen2	1 x KB/MS 1 x RS-422/485 (RS-485 support AFC) 2 x USB 2.0 2 x USB 3.2 Gen2 3 x RS-232 4 x USB 3.2 Gen1	1 x KB/MS 4 x USB 3.2 Gen 1 10 x RS-232 10 x USB 2.0
Storage Interface	1 x SATA 6G/s 1 x M.2 B key (with SIM holder) (PCIe x2/ SATA/ USB 3.2)	2 x SATA 6Gb/s 1 x M.2 (M Key)	3 x SATA 6Gb/s 1 x M.2 (B Key)	4 x SATA 6Gb/s (RAID 0/1/5/10 supported)
Audio	Realtek ALC888S HD Audio codec			
Digital I/O	8-bit programmable I/O (8-bit GPIO is for programming I/O)			N/A
Power Consumption	TBD	TBD	TBD	12V@3.38A, 3.3V@0.62A, 5V@9.81A, 5VSB@0.03A (Zhaoxin KX-U6580 2.5 GHz CPU with 8 GB 2400 MHz DDR4 memory)
Watchdog Timer	Software programmable and supports 1~255 sec. system reset			
Operation Enviornment	Temperature Range: -20°C ~ 60°C (-4°F ~ 140°F) Relative Humidity: 5% ~ 95% non-condensing			
Expansion Slot	1 x PCIe x4 Slot Open-ended (Gen3.0 x1 signal) 1 x M.2 A key (PCIe x1 & USB 2.0) 1 x M.2 B key (with SIM holder) (PCIe x2/ SATA/ USB 3.2)	1 x PCIe x8 Slot (x4 Gen4 signal) 1 x M.2 (A Key) 1 x M.2 (M Key)	1 x PCIe x16 (Gen3) 1 x M.2 (B Key) 1 x M.2 (A Key)	1 x PCIe x16 slot (x8 Gen3 signal) 1 x Full-size PCIe Mini Slot
CPU Cooler	Cooler/Heatsink	Cooler/Heatsink	CF-115XA-R10 CF-115XC-R10 CF-115XD-R10 CF-115XE-R10	Cooler

Mini-ITX Selection Guide



Model Name	gKINO-V1000/R1000	KINO-DH310	KINO-DH110	KINO-DAL	tKINO-AL
CPU Socket	On Board	LGA1151	LGA1151	On Board	On Board
CPU Type	AMD® Ryzen™ Embedded V1000/R1000 series on board SoC	8th generation Intel® Core™ i7/ i5/i3 Pentium® and Celeron® processor	6th/7th generation Intel® Core™ i7/i5/i3 Pentium® and Celeron® processor	Intel® Atom™/Celeron®/ Pentium® on-board SoC	Intel® Atom™/Celeron®/ Pentium® on-board SoC
Chipset	AMD® Ryzen™ Embedded V1000/R1000 series on board SoC	Intel® H310	Intel® H110	Intel® Atom™/Celeron®/ Pentium® on-board SoC	Intel® Atom™/Celeron®/ Pentium® on-board SoC
Memory	2 x SO-DIMM DDR4 2400MHz up to 64GB	2 x 260-pin 2666/2400 MHz dual-channel DDR4 SDRAM SO-DIMMs (system Max. 64 GB)	2 x 260-pin 2666/2400 MHz dual-channel DDR4 SDRAM SO-DIMMs (system Max. 64 GB)	2 x 204-pin 1866/1600 MHz single-channel DDR3L SO-DIMM (system max. 8 GB)	2 x 204-pin 1866/1600 MHz single-channel DDR3L SO-DIMM (system max. 8 GB)
Display Interface	Triple independent display 4 x DP (KINO-V1000) 3 x DP (KINO-R1000)	Dual independent display 2 x HDMI 1 x iDP interface	Dual independent display 1 x DP++ 1 x HDMI 1 x iDP interface	Triple independent display 1 x VGA 1 x HDMI 1 x 18/24-bit dual channel LVDS	Triple independent display 2 x DP++ 1 x eDP
Ethernet	Dual LAN: RTL8119I	Dual LAN: RTL8111H	LAN1: Intel® I210-AT PCIe controller with NCSI support LAN2: Intel® I219LM with Intel® AMT 11.0 support	Dual LAN: Intel® I210-IT/211AT PCIe controller	Dual LAN: RTL8111
iRIS Remote Management Module	N/A				
I/O Interface	2 x USB 3.2 Gen1 4 x USB 2.0 8 x RS-232 (2 support Cctalk, TTL)	1 x KB/MS 1 x RS-422/485 3 x RS-232, 4 x USB 3.2 Gen 1 4 x USB 2.0	1 x KB/MS 1 x RS-232/422/485 2 x RS-232, 4 x USB 3.2 Gen 1 4 x USB 2.0 2 x SATA 6G/s	1 x PS2 KB/MS 2 x RS-232/422/485 2 x USB 2.0 4 x RS-232 4 x USB 3.2 Gen1	1 x PS/2 KB/MS 2 x RS-232/422/485 2 x USB 2.0 4 x RS-232 4 x USB 3.2 Gen 1
Storage Interface	2 x SATA 6G/s 1 x M.2 2242/2280 M key (PCIe x2/SATA)	2 x SATA 6G/s	1 x M.2 (B Key) (2242) (SATA signal)	2 x SATA 6Gb/s with 12/5V SATA power connector 1 x 8 GB eMMC (optional) 1 x M.2 (B Key) (2242)(SATA port1 + USB 2.0 signal) 1 x Micro SD slot (Optional)	2 x SATA 6Gb/s with 12/5V SATA power connector 1 x M.2 (B Key) (2242)(SATA port1 + USB 2.0 signal) 1 x Micro SD slot (Optional)
Audio	Realtek ALC888S HD Audio codec				Realtek ALC269 HD Audio codec
Digital I/O	8-bit programmable digital I/O				
Power Consumption	TBD	12V@11.32A (Intel® Core™ i7-8700 up to 4.60 GHz CPU with two 8GB 2666MHz DDR4 memory)	12V@12.16A (3.4GHz Intel® Core™ i7-6700 with two 8GB 2133MHz 16GB DDR4 memory)	8-bit programmable digital I/O 12V@3.62A (Intel® Pentium® N4200 CPU with two 8GB 1600MHz DDR3L memory)	12V@2.58A (Intel® Pentium® N4200 CPU with two 8GB 1600MHz DDR3L memory)
Watchdog Timer	Software programmable and supports 1~255 sec. system reset				
Operation Enviornment	Temperature Range: -20°C ~ 60°C (-4°F ~ 140°F) Relative Humidity: 5% ~ 95% non-condensing			Temperature Range: KINO-DAL: -20°C ~ 70°C (-4°F ~ 158°F) KINO-DALW2: -40°C ~ 85°C (-40°F ~ 185°F) Relative Humidity: 5% ~ 95% non-condensing	Temperature Range: -20°C ~ 70°C (-4°F ~ 158°F) Relative Humidity: 5% ~ 95% non-condensing
Expansion Slot	1 x PCIe x16 slot 1 x M.2 2242/2280 M key (PCIe x2/SATA)	1 x PCIe x16 1 x M.2 M key (2280, Gen2 PCIe x2 only) 1 x M.2 A Key (2230, PCIe x1 & USB 2.0)	1 x Full-size PCIe Mini card slot 1 x PCIe x1 slot	1 x PCIe x1 slot 1 x Full/Half-size PCIe Mini card slot (w/ SIM holder)	1 x PCIe x1 slot 1 x Full/Half-size PCIe Mini card slot (w/ SIM holder)
CPU Cooler	Cooler	CF-115XA-R10 CF-115XC-R10 CF-115XD-R10 CF-115XE-R10	CF-115XC-R10 CF-115XD-R10 CF-115XE-R10	Heatsink	Heatsink

Mini-ITX Selection Guide







Model Name	tKINO-ULT3	KINO-DCM236	KINO-DQM170	KINO-AQ170	tKINO-BW
CPU Socket	On Board	On Board	On board	LGA1151	On board
CPU Type	Intel® Core™ i7/i5/i3, Celeron® ULT processor	Intel® Xeon® E3, Core™ i3, Celeron® process	6th generation Intel® Core™ i7/ i5/i3 and Celeron® processor	6th/7th generation Intel® Core™ i7/i5/i3, Pentium® and Celeron® processor	Intel® Pentium®/Celeron® on board SoC
Chipset	Intel® Core™ i7/i5/i3, Celeron® ULT processor	Intel® CM236	Intel® QM170	Intel® Q170	Intel® Pentium®/Celeron® on-board SoC
Memory	2 x SO-DIMM DDR4 2133MHz, system maximun up to 32GB	2 x SO-DIMM DDR4 2133MHz up to 32GB with ECC support	Two 260-pin 2133 MHz dual-channel DDR4 SDRAM SO-DIMMs (system Max. 64 GB)	Two 260-pin 2133 MHz dual-channel DDR4 SDRAM SO-DIMMs (system Max. 64 GB)	Two 204-pin 1600/1333 MHz dual-channel DDR3L SDRAM SO-DIMMs (support up to 8 GB)
Display Interface	Triple independent display 1 x HDMI/DP 1 x HDMI 1 x LVDS/eDP	Triple independent display 1 x HDMI 2.0 2 x HDMI 1.4 1 x LVDS	Triple independent display supported 1 x HDMI 2.0 2 x HDMI 1.4 1 x LVDS	Triple independent display supported 1 x HDMI 2.0 1 x HDMI/DP 1 x VGA 1 x iDP interface	Triple independent display supported 1 x HDMI/DP 1 x VGA 1 x 18/24-bit dual-channel LVDS
Ethernet	LAN1: Intel® I219LM LAN2: Intel® I211AT	LAN1: Intel® I219LM LAN2: Intel® I211	LAN1: Intel® I219-LM with Intel® AMT 11.0 support LAN2: Intel® I211 PCIe controller	LAN1: Intel® I211 PCIe controller LAN2: Intel® I219LM with intel AMT 11.0 support	Dual LAN: Realtek RTL8111G PCIe controller
iRIS Remote Management Module	N/A				
I/O Interface	2 x RS-232/422/485 4 x RS-232 4 x USB 2.0 4 x USB 3.2 Gen 1	1 x KB/MS 2 x RS-232/422/485 4 x RS-232 4 x USB 2.0 4 x USB 3.2 Gen 1	1 x KB/MS 2 x RS-232/422/485 4 x RS-232 4 x USB 2.0 4 x USB 3.2 Gen 1	1 x KB/MS 2 x RS-232/422/485 4 x RS-232 4 x USB 3.2 Gen 1 6 x USB 2.0	1 x KB/MS 2 x RS-232/422/485 2 x USB 3.2 Gen 1 4 x RS-232 4 x USB 2.0
Storage Interface	2 x SATA 6Gb/s with 5V SATA power connector 1 x eMMC5.0 (up to 32G, optional)	4 x SATA6Gb/s 1 x mSATA	4 x SATA 6Gb/s (RAID 0/1/5/10 supported)	4 x SATA 6Gb/s (RAID 0/1/5/10 supported)	2 x SATA 6Gb/s 1 x mSATA 1 x Micro SD slot
Audio	Realtek ALC888S HD Audio codec				
Digital I/O	8-bit programmable digital I/O		8-bit digital I/O		
Power Consumption	12V@4.68A (Intel® Core™ i7-6600U up to3.4GHz CPU with 16GB (8GB x 2) DDR4-2133 memory running in 3.2GHz)	12V@6.93A (Intel Xeon E3-1505M V5 2.8GHz CPU with 32 GB (two 16 GB) 2133 MHz DDR4 memory)	12V@5.08A (Intel® Core™ i7-6820EQ, 3.5GHz CPU with 16 GB (two 8 GB) 2133 MHz DDR4 memory)	3.3V@1.62A, 5V@3.54A, 12V@8.17A, 5VSB@3.6A (Intel® Core™ i7 6700K 4.0 GHz CPU with 16 GB (two 8 GB) 2133 MHz DDR4 memory)	12V@1.61A (Intel® Celeron® N3710 CPU with two 4 GB 1600 MHz DDR3L memory)
Watchdog Timer	Software programmable and supports 1~255 sec. system reset				
Operation Enviornment	Temperature Range: -20°C ~ 60°C (-4°F ~ 140°F) Relative Humidity: 5% ~ 95%, non-condensing				
Expansion Slot	1 x PCIe x4 slot 1 x Full-size PCIe Mini card slot (support mSATA, colay with SATA2) 1 x Full-size PCIe Mini card slot (with SIM card slot)	1 x PCIe x16 slot 1 x Full-size PCIe Mini card slot (support mSATA) 1 x Half-size PCIe Mini card slot 1 x M.2 2230 (A key)	1 x PCIe x16 slot 1 x Full-size PCIe Mini card slot (support mSATA) 1 x Half-size PCIe Mini card slot 1 x M.2 2230 (A key)	1 x PCIe x8 slot 1 x Full-size PCIe Mini card Slot (support mSATA)	1 x PCIe x1 slot 1 x PCIe Mini card slot
CPU Cooler	Heatsink	Heatsink	Heatsink	CF-115XC-R10 CF-115XD-R10 CF-115XE-R10	Heatsink

Mini-ITX Selection Guide







Model Name	KINO-DBT	KINO-DH810	eKINO-BT	KINO-DQM871-i1	KINO-QM770
CPU Socket	On board	LGA1150	On board	On Board	Socket G2
CPU Type	Intel® Atom™/Celeron® on board SoC	Intel® Core™ i7/i5/i3, Pentium®, Celeron® processor	Intel® Atom™/Celeron® on-board SoC	Intel® Core™ i7/i5/i3 Mobile processor	Intel® Mobile processor
Chipset	Intel® Atom™/Celeron® on-board SoC	Intel® H81	Intel® Atom™/Celeron® on-board SoC	Intel® QM87	Intel® QM77
Memory	Two 204-pin 1066/1333 MHz dual-channel unbuffered DDR3L SDRAM SO-DIMM support up to 8 GB (J1900, N2930, E3845, E3827, E3826) One 204-pin 1066/1333 MHz dual-channel unbuffered DDR3L SDRAM SO-DIMM supports up to 4 GB (N2807, E3825, E3815)	Two 204-pin 1600/1333 MHz dual-channel DDR3 & DDR3L SDRAM unbuffered DIMMs (system max. 16 GB)	Two 204-pin 1066/1333 MHz dual-channel unbuffered DDR3L SDRAM SO-DIMM support up to 8 GB (J1900, N2930, E3845, E3827, E3826) One 204-pin 1066/1333 MHz dual-channel unbuffered DDR3L SDRAM SO-DIMM supports up to 4 GB (N2807, E3825, E3815)	2 x 204-pin, Max. 16 GB, 1333/1600 MHz dual-channel DDR3 SO-DIMMs	2 x 204-pin, Max. 16 GB, 1066/1333/1600 MHz dual-channel DDR3 SO-DIMMs
Display Interface	Dual independent display supported 1 x VGA 1 x DVI-D	Dual display supported 1 x VGA 1 x DVI-D 1 x iDP interface	Dual display supported 1 x VGA 2 x 18/24-bit dual-channel LVDS	Triple display supported 2 x HDMI 1 x VGA 1 x 18/24-bit dual-channel LVDS 1 x iDP interface	Triple display supported 2 x HDMI 1 x DVI-I 1 x18/24-bit dual-channel LVDS
Ethernet	Dual LAN: Realtek RTL8111HN PCIe controller	Dual LAN: Intel® I211-AT PCIe controller	Dual LAN: Realtek RTL8111E PCIe controller	LAN1: Intel® I217LM with Intel® AMT 9.0 support LAN2: Intel® I210-AT PCIe controller	LAN1:Intel® 82579 PHY with Intel® AMT 8.0 support LAN2:Intel® 82583V PCIe controller
iRIS Remote Management Module	N/A			1 x iRIS-1010 slot	N/A
I/O Interface	1 x KB/MS 1 x RS-422/485 2 x USB 3.2 Gen 1 4 x USB 2.0 5 x RS-232	1 x PS/2 for KB/MS 1 x RS-422/485 2 x USB 3.2 Gen 1 5 x RS-232 6 x USB 2.0	1 x PS/2 for KB/MS 1 x RS-422/485 2 x USB 3.2 Gen 1 4 x RS-232 4 x USB 2.0	1 x PS/2 for KB/MS 1 x RS-422/485 1 x SMBus 1 x TPM (2x10 pin) 4 x USB 3.2 Gen 1 5 x RS-232 10 x USB 2.0	1 x KB/MS 1 x RS-422/485 1 x SMBus 1 x TPM (2x10 pin) 2 x RS-232 4 x USB 2.0 4 x USB 3.2 Gen 1
Storage Interface	2 x SATA 3Gb/s 1 x Micro SD slot (E38xx sku only)	2 x SATA 6Gb/s	2 x SATA 3Gb/s	2 x SATA 6Gb/s 2 x SATA 3Gb/s 1 x mSATA	2 x SATA 6Gb/s 2 x SATA 3Gb/s
Audio	Realtek ALC888S HD Audio codec				
Digital I/O	8-bit digital I/O	8-bit programmable digital I/O			
Power Consumption	12V@1.64A (Intel® Celeron® J1900 CPU with 4 GB 1333 MHz DDR3L memory)	12V@6.03A (Intel® Core™ i7-4770K 3.90 GHz CPU with two 1333 MHz 4 GB DDR3 memory)	12V@1.55A (Intel® Celeron® J1900 CPU with two 8 GB 1333 MHz DDR3L memory)	12V@5.03A (2.0GHz Intel® Core™ i7 processor with two 1333 MHz 4 GB DDR3 memory)	12V@6.08A (2.3GHz Intel® Core™ i7-3610QE with two 1333 MHz 4 GB DDR3 memory running 3DMark06 burn in)
Watchdog Timer	Software programmable and supports 1~255 sec. system reset				
Operation Environment	Temperature Range: -20°C ~ 60°C (-4°F ~ 140°F) Relative Humidity: 5% ~ 95%, non-condensing		Temperature Range: 0°C ~ 60°C (32°F ~ 140°F) Relative Humidity: 5% ~ 95% non-condensing	Temperature Range: -10°C ~ 60°C (14°F ~ 140°F) Relative Humidity: 5% ~ 95%, non-condensing	
Expansion Slots	1 x Full-size PCIe Mini card slot (support mSATA) 1 x PCIe x4 slot (with PCIe x1 signal)	1 x Full-size PCIe Mini card slot 1 x PCIe x1 slot	1 x Full-size PCIe Mini card slot 1 x PCIe x1 slot	1 x PCIe x16 slot 1 x Full-size PCIe Mini slot (support mSATA)	1 x PCIe x16 slot 1 x PCIe Mini card slot (support mSATA)
CPU Cooler	Heatsink	CF-115XA-R10 CF-115XE-R10	Heatsink	XCF-479B-RS CF-989B-RS-R11	CF-989A-RS-R12

KINO-EHL

Mini-ITX SBC supports Intel® Elkhart Lake Proccessor, 12V DC input, Triple Independent Display, HDMI, DP, SATA 6Gb/s, Triple GbE, USB 3.2, M.2, HD audio and RoHS

Preliminary





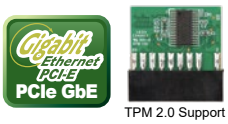

TPM 2.0 Support



Specifications

- CPU: Intel® Elkhart Lake proccessor (4.5W, 6W ,9W , 10W ,12W)
- BIOS: AMI UEFI BIOS
- Memory: 1 x SO-DIMM DDR4 3200MHz, system maximun up to 32GB
- Graphics Engine
  Gen11LP Gfx firmware and driver, Media SDK, OpenCL* 1.2, OpenGL 4.5, OpenGL-ES 3.2, Vulkan v1.1, DirectX
- Display Output
  3 x Independent Display
  1 x HDMI 1.4b (up to 4096 x 2160@30Hz)
  1 x DP 1.4a (up to 4096 x 2160 @60Hz)
  1 x eDP / LVDS
- Ethernet
  2 x GPY211
  1 x MARVEL 88E1512 1G PHY (support TSN)
- Embedded Controller: iWDD IT5571
- External I/O Interface
  2 x RS-232
  2 x USB 2.0
  2 x USB 3.2 Gen2
- Internal I/O Interface
  1 x RS-232 (2x5 pin, P=2.0)
  1 x RS-422/485
  1 x SATA 6G/s
  1 x USB 3.2/2.0 Port (Vertical type-A)
  2 x CAN (PIN Header) Pending
  4 x USB 2.0 (2x4 pin, P=2.0)
- SMBus: 1 x SMBus (1x4 pin)
- I²C: 1 x I²C(1x4 pin)
- EMMC
  eMMC 5.1
  64/32/16/8G (Optional)
- Audio
  Realtek ALC888S HD Audio codec supports 7.1-channel
  1 x 2IN1 Audio jacks (line-out/mic-in) on rear IO
  1 x Analog audio (2x5 pin)
- Front Panel: 1 x Front Panel (2x7 pin, power LED, HDD LED,power button, reset button)
- LAN LED: 2 x LAN LED (1x2 pin)
- Expansion
  1 x PCIe x4 Slot Open-ended (Gen3.0 x1 signal)
  1 x M.2 2230 A key (PCIe x1 & USB 2.0)
  1 x M.2 3052/3042/2242/2280 B key (with SIM holder) (PCIe x2/ SATA/ USB 3.2)
- Digital I/O: 1 x DIO pin header (4in/4out)
- TPM: 1 x TPM (2x10 pin) (IN03)
- Fan Connector
  1 x CPU fan connector (1x4 pin)
  1 x System fan connector (1x3 pin)
- Chassis Open: 1 x Chassis intrusion (1x2 pin)
- Power Supply
  12V DC input
  ErP/EuP Compliant
  1 x Internal power connector (2x2 pin)
  1 x External DC power Jackc (Ø5.5mm)
- Watchdog Timer: Software programmable support 1~255 sec. system reset
- Power Consumption
  TBD
- Operating Temperature: -20°C ~ 60°C
- Storage Temperature: -30°C ~ 70°C
- Operating Humidity: 5% ~ 95%, non-condensing
- Dimensions: 170 mm x 170 mm
- Weight: GW:900g / NW:400g
- CE/FCC compliant

Features

- Mini-ITX form factor with Intel® Elkhart Lake processor support DDR4-3200 memory
- 12V DC Input
- Support Triple independent displays (HDMI, DP, Edp/LVDS)
- Triple GbE LAN (Dual 2.5G)
- M.2 A key for WIFI+Bluetooth (PCIe x1/USB 2.0); M.2 key for Storage (PCIe x2/SATA)
- High speed I/O for USB 3.2 Gen 2 (10Gb/s)
- PCIe x4 Gen3.0 slot (open-end)

Packing List

1 x KINO-EHL single board computer with CPU heatsink	1 x I/O shielding
2 x SATA cable	1 x QIG

Dimensions *(Unit: mm)*



Ordering Information

Part No.	Description
KINO-EHL-R10	Mini-ITX SBC supports Intel® Elkhart Lake proccessor, 12V DC input, Triple Independent Display, HDMI, DP, SATA 6Gb/s, Triple GbE, USB 3.2, M.2, HD audio and RoHS
19800-000075-RS	PS/2 KB/MS cable with bracket, 220mm, P=2.0
19800-003100-100-RS	Dual port USB cable with bracket, 30mm, P=2.54
32102-000100-200-RS	SATA power cable, MOLEX 5264-4P to SATA15P
32205-000702-100-RS	RS-232 cable, 230mm, P=2.54
32205-002700-200-RS	RS-232/422/485, 200mm, P=2.0
34000-000645-RS	Fanless heatsink module, 93.5 x 84 x 30mm
TPM-IN03-R10	20-pin Infineon SPI TPM2.0 module, software mangement tool, firmware V7.63

tKINO-ULT6

Thin Mini-ITX SBC supports Intel® Tigerlake-UP3 Processor, 9~36V DC input, Quadruple Independent Display, HDMI, DP, eDP, SATA 6Gb/s, Dual Intel® GbE, USB4, M.2, HD audio and RoHS

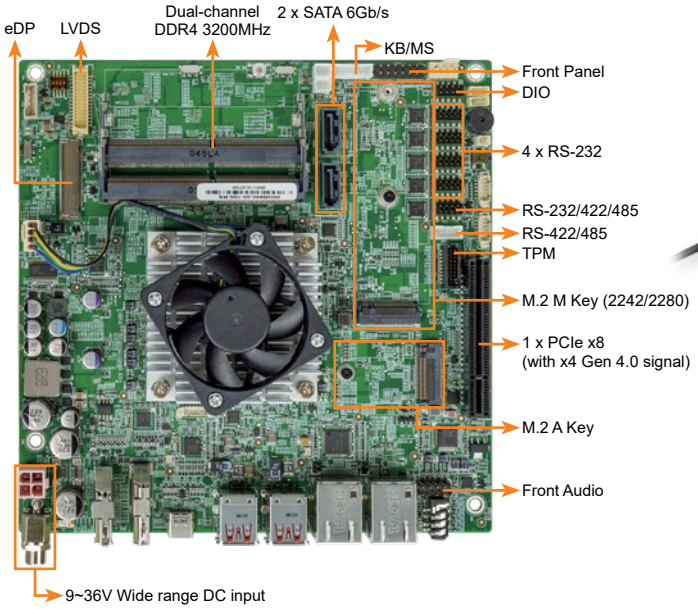

USB4 higher transfer speeds, improved bandwidth & backward compatibility

Preliminary

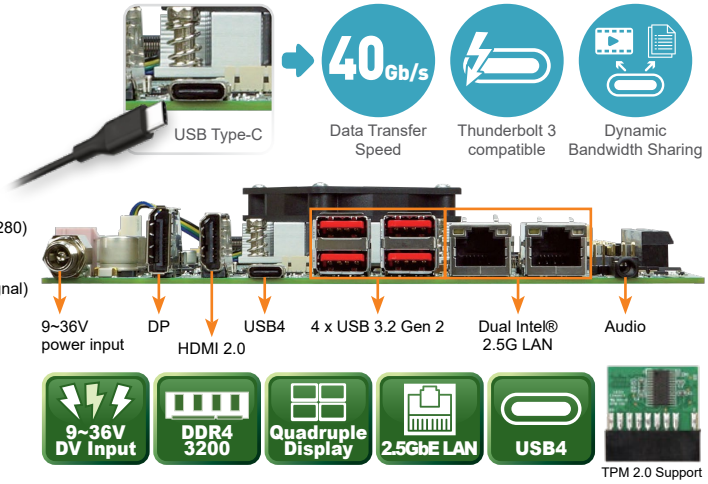

TPM 2.0 Support

Specifications

- CPU
  11th Gen. Intel® mobile Tiger Lake-UP3 on-board processor
  Intel® Core™ i7-1185G7E (up to 4.4GHz, quad-core, 12M Cache, TDP=28/15/12W)
  Intel® Core™ i5-1145G7E (up to 4.1GHz, quad-core, 8M Cache, TDP=28/15/12W)
  Intel® Core™ i3-1115G4E (up to 3.9GHz, dual-core, 6M Cache, TDP=28/15/12W)
  Intel® Celeron® 6305E (up to 1.8GHz, dual-core, 4M Cache, TDP=15W)
- BIOS: AMI UEFI BIOS
- Memory: 2 x SO-DIMM DDR4 3200MHz, system maximun up to 64GB
- Graphics Engine
  Intel® HD Graphics Gen 12 Gfx; Up to 96EU; 2VDbox; AI (INT8)
  HDMI 2.0 integrated, 4 Display Pipes, 8k60210b
  AV1 Codec, 12b support, E2E Compression, IPU6 FF
- Display Output
  4 x 4K Independent Display
  1 x DP 1.4a (up to 4096 x 2160 @60Hz)
  1 x eDP/LVDS (select by switch)
  1 x HDMI 2.0b (up to 4096 x 2160@60Hz)
  1 x Type-C DP (up to 4096 x 2304 @60Hz) with USB4
- Ethernet
  LAN1: Intel® I225V 2.5GbE controller
  LAN2: Intel® I225V 2.5GbE controller
- Super I/O: Fintek F81966
- External I/O Interface
  4 x USB 3.2 Gen2
  1 x USB4
- Internal I/O Interface
  1 x RS-232/422/485 (2x5 pin, P=2.0) (RS-485 support AFC)
  1 x RS-422/485 (2x5 pin, P=2.0) (RS-485 support AFC)
  1 x KB/MS (1x6 pin)
  2 x SATA 6G/s with 5/12V SATA power connector
  4 x RS-232 (2x5 pin, P=2.0)
  4 x USB 2.0 (2x4 pin, P=2.0)
- SMBus: 1 x SMBus (1x4 pin)
- I²C: 1 x I²C (1x4 pin)
- Audio
  Realtek ALC888S HD Audio Codec
  1 x Audio jacks (line-out, mic-in) on rear IO
  1 x Front audio (2x5 pin)
- Front Panel: 1 x Front Panel (2x7 pin, power LED, HDD LED, power button, reset button)
- LAN LED: 2 x LAN LED (1x2 pin)
- Expansion
  1 x PCIe x8 Slot Open-ended (Gen4.0 x4 signal)
  1 x M.2 2230 A key (PCIe x1 & USB 2.0)
  1 x M.2 2242/2280 M key (PCIe x2/SATA)
- Digital I/O: 1 x 8-bit digital I/O (2x5 pin)
- TPM: 1 x TPM (2x10 pin)
- Fan Connector
  1 x CPU fan connector (1x4 pin)
  1 x System fan connector (1x4 pin)
- Chassis Open: 1 x Chassis intrusion (1x2 pin)
- Power Supply
  9~36V DC input
  1 x Internal power connector (2x2 pin)
  1 x External DC power Jackc (Ø5.5mm)
  ErP/EuP Compliant
- Watchdog Timer: Software Programmable support 1~255 sec. System reset
- Power Consumption
  12V@6.48A (Intel® Core™ i7-1185G7E up to 4.4GHz CPU with 16GB (8GB x 2) DDR4-3200 memory running in 2.8GHz)
- Operating Temperature: -20°C ~ 60°C
- Storage Temperature: -30°C ~ 70°C
- Operating Humidity: 5% ~95%, non-condensing
- Dimensions: 170 mm x 170 mm
- Weight: GW:900g / NW:400g
- CE/FCC compliant

Features

- Thin Mini-ITX form factor with Intel® Tigerlake-UP3 processor support DDR4-3200 memory
- Wide range 9~36V DC Input
- Support quadruple independent displays (HDMI, DP, eDP/LVDS, Type-C DP)
- Dual Intel® 2.5GbE LAN
- M.2 A key for WIFI+Bluetooth (PCIe x1/USB 2.0), M.2 M key for Storage (PCIe x2/SATA)
- PCIe x8 Gen 4.0 slot (x4 signal)

Dimensions *(Unit: mm)*

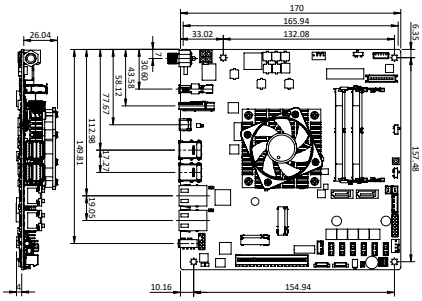

Packing List

1 x tKINO-ULT6 single board computer with CPU cooler	1 x I/O shielding
1 x SATA cable	1 x QIG

Ordering Information

Part No.	Description
tKINO-ULT6-i7-R10	Thin Mini-ITX SBC supports Intel® 11th Gen Tigerlake-UP3 Mobile Core™ i7-1185G7E Proccessor, 9~36V DC input, Quadruple Independent Display, HDMI, DP, eDP, SATA 6Gb/s, Dual Intel® 2.5GbE, USB4, M.2, HD audio and RoHS
tKINO-ULT6-i5-R10	Thin Mini-ITX SBC supports Intel® 11th Gen Tigerlake-UP3 Mobile Core™ i5-1145G7E Proccessor, 9~36V DC input, Quadruple Independent Display, HDMI, DP, eDP, SATA 6Gb/s, Dual Intel® 2.5GbE, USB4, M.2, HD audio and RoHS
tKINO-ULT6-i3-R10	Thin Mini-ITX SBC supports Intel® 11th Gen Tigerlake-UP3 Mobile Core™ i3-1115G4E Proccessor, 9~36V DC input, Quadruple Independent Display, HDMI, DP, eDP, SATA 6Gb/s, Dual Intel® 2.5GbE, USB4, M.2, HD audio and RoHS
tKINO-ULT6-C-R10	Thin Mini-ITX SBC supports Intel® 11th Gen Tigerlake-UP3 Mobile Celeron® 6305E Proccessor, 9~36V DC input, Quadruple Independent Display, HDMI, DP, eDP, SATA 6Gb/s, Dual Intel® 2.5GbE, USB4, M.2, HD audio and RoHS
19800-000075-RS	PS/2 KB/MS cable with bracket, 220mm, P=2.0
19800-003100-100-RS	Dual port USB cable with bracket, 30mm, P=2.54
32102-000100-200-RS	SATA power cable, MOLEX 5264-4P to SATA15P
32205-000702-100-RS	RS-232 cable, 230mm, P=2.54
32205-002700-200-RS	RS-232/422/485, 200mm, P=2.0
TPM-IN03-R10	20-pin Infineon SPI TPM2.0 module, software mangement tool, firmware V7.63

KINO-DH420

Mini-ITX SBC supports LGA1200 Intel® 10th Generation Core™ i9/i7/i5/ i3/ Pentium®/Celeron® CPU per Intel® H420, DDR4, dual independent displays, triple 2.5G LAN, M.2, SATA 6Gb/s, HD Audio and RoHS

Preliminary

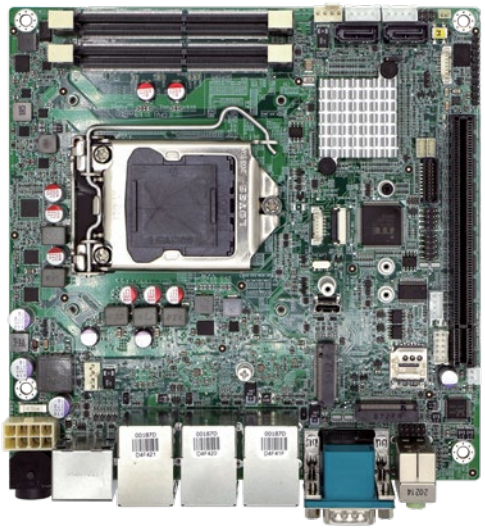





Specifications

- CPU
  LGA1200 socket supports 10th Generation Core™ i9/i7/i5/i3/ Pentium®/Celeron® processor
- Chipset Intel® H420E
- BIOS AMI UEFI BIOS
- Memory
  Two 260-pin 2933 MHz Dual-Channel DDR4 SDRAM Unbuffered DIMM supported up to 64GB
- Graphics Engine
  Intel® HD Graphics Gen9 Engines with Low power 16 execution unit, supports DX11.3/12, OpenGL 4.3/4.4/4.5and OpenCL1.2/2.0/2.1
- Display Output
  Dual independent display
  1 x DP (up to 4096 x 2304 @60Hz)
  1 x HDMI (up to 4096 x 2304@30Hz)
  1 x internal Type-C DP (up to 4096 x 2304@60Hz)
- Ethernet
  LAN1: INTEL I225V 2.5G
  LAN2: INTEL I225V 2.5G
  LAN3: INTEL I225V 2.5G
- Super I/O Fintek F81966D-I
- Embedded Controller iWDD IT5571E
- External I/O Interface
  4 x USB 3.2 Gen1
  2 x USB 2.0
  2 x RS-232
- Internal I/O Interface
  1 x RS-232 (2x5 pin, P=2.0) 1 x RS-422/485 (1x4 pin, P=2.0)
  2 x USB 2.0 (2x4 pin, P=2.0)
  2 x SATA 6G/s with 12V/5V SATA power connector (No RAID)
- I²C 1 x I²C (1x4 pin)
- SMBus 1 x SMBus(1x4 pin)
- Audio
  Realtek ALC888S HD Audio codec
  2 x Audio Jack (Lin-out, Mic-in)
  1 x Front audio (2x5 pin)
- Front Panel
  1 x Front Panel (1 x 10pin, Power LED, HDD LED, Power Button, Reset Button)
- LAN LED 2 x LAN LED (1x2 pin)
- Expansion
  1 x PCIe x16
  1 x M.2 B key (3042/3052/2242/2280, PCIe x2, USB3.2 Gen1, SATA)
  1 x M.2 A key (2230, PCIe x1 & USB 2.0)
- Digital I/O 1 x 8-bit digital I/O (2x5 pin)
- TPM 1 x TPM (2x10 pin)
- Fan Connector 2 x Smart fan connector (1x4 pin)
- Chassis Open 1 x Chassis intrusion (1x2 pin)
- Power Supply
  DC 12V input 2x4 ATX power connector
  1 x DIN 4-pin DC Jack Support AT/ATX mode
  ErP/EuP Compliant
- Watchdog Timer
  Software programmable support 1~255 sec. system reset
- Power Consumption TBD
- Operating Temperature -20°C ~ 60°C
- Storage Temperature -30°C ~ 70°C
- Operating Humidity 5% ~ 95%, non-condensing
- Dimensions 170mm x 170mm
- Weight GW:900g / NW:400g
- CE/FCC compliant

Features

- LGA1200 Intel® 10th Generation Core™ i7/i5/i3, Celeron® and Pentium® processor
- Dual-channel DDR4 2933MHz
- Support internal type-C DP / HDMI and DP
- Support M.2 A key for WLAN expansion & B key for storage

Packing List

1 x KINO-DH130 single board computer	1 x I/O shielding
1 x SATA cable	1 x QIG

Dimensions *(Unit: mm)*



Ordering Information

Part No.	Description
KINO-DH420-R10	Mini-ITX SBC supports LGA1200 Intel® 10th Generation Core™ i9/i7/i5/i3/Pentium®/Celeron® CPU per Intel® H420, DDR4, dual independent displays, triple GbE LAN, M.2, SATA 6Gb/s, HD Audio and RoHS
32000-02300-RS	PS/2 KB/MS cable, 135mm, P=2.0
32000-070301-RS	Dual port USB cable, 210mm, P=2.0
32205-002700-100-RS	RS-232 cable, 200mm, P=2.0
CF1156A-RS-R11	High-performance LGA1155/1156 cooler kit, 1U chassis compatible 73W
CF-1156C-RS	LGA1155/LGA1156 cooler kit, 1U chassis compatible, 45W
CF-1156D-RS	LGA1155/LGA1156 cooler kit, 1U chassis compatible, 65W
TPM-IN03-R10	20-pin Infineon SPI TPM2.0 module, software mangement tool, firmware V7.63

KINO-KX-U6580 U6780A

Mini-ITX SBC supports Zhaoxin 16nm KX-U6580/KX-U6780A(70W) on-board processor with PCIe Mini, VGA, DVI, USB 3.2 Gen1, SATA 6Gb/s, COM, Audio and RoHS

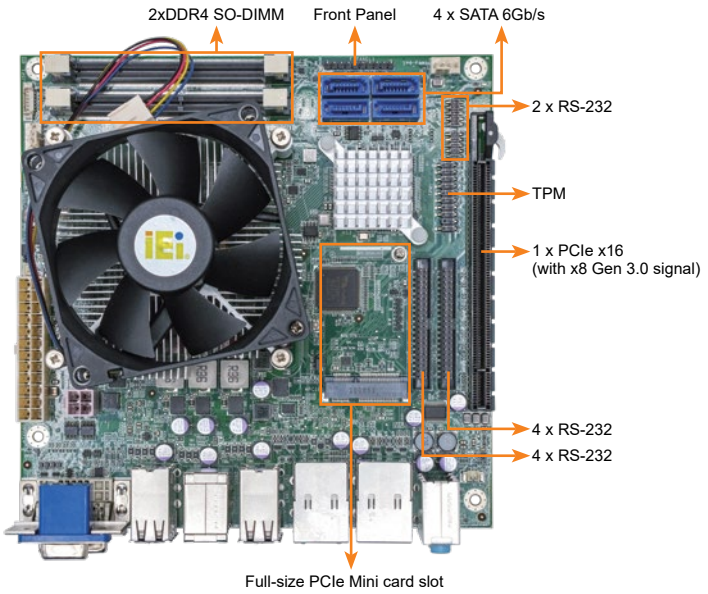

Rich I/O

Preliminary

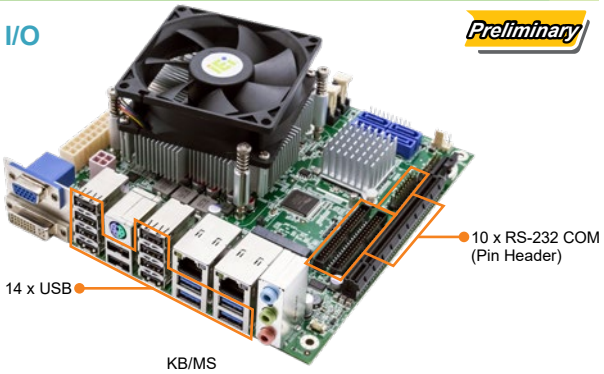

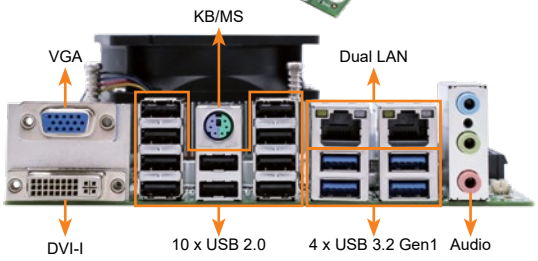

DDR4 2666 | Dual Display | PCIe Mini Expansion | USB 3.2 | PCIe GbE | SATA 6Gb/s

Specifications

- SoC
  Zhaoxin Kaixian KX-6000 series 8-core processor
  Zhaoxin KX-U6580 on-board SoC (8-Core, 8MB Cache, 2.5GHz, 70W)
  Zhaoxin KX-U6780A on-board SoC (8-Core, 8MB Cache, 2.7GHz, 70W)
- Chipset
  Zhaoxin ZX-200
- BIOS
  AMI UEFI BIOS
- Memory
  2 x 260-pin 2666MHz Dual-channel DDR4 SO-DIMM (system max. 64GB)
- Graphics Engine
  C-960 Graphics Processing Unit with 2D/3D/Video Acceleration
- Display Output
  1 x VGA (up to 1920x1080@60Hz)
  1 x DVI-I (up to 1920x1080@60Hz)
- Ethernet
  LAN1: Realtek RTL8111H PCIe GbE controller
  LAN2: Realtek RTL8111H PCIe GbE controller
- External I/O Interface
  10 x USB 2.0
  4 x USB 3.2 Gen 1 (5Gb/s)
  1 x KB/MS
- Internal I/O Interface
  2 x RS-232 (2x5 pin, P=2.0)
  8 x RS-232 (2x20 pin, P=2.0)
  4 x SATA 6G/s
- TPM
  1 x TPM (2x10 pin)
- Audio
  Realtek ALC888S
  3 x Audio jacks (line-out, line-in, mic-in) on rear IO
- Front Panel
  1 x Front panel (1x10 pin, power LED, HDD LED, power button, reset button)
- Expansion
  1 x Full-size PCIe Mini card slot
  1 x PCIe x16 slot (with x8 Gen 3.0 signal)
- Fan Connector
  1 x CPU smart fan connector (1x4 pin)
  1 x System smart fan connector (1x4 pin)
- Power Supply
  ATX power supply
- Watchdog Timer
  Software Programmable support 1~255 sec. System reset
- Power Consumption
  12V @ 3.38A, 3.3V @ 0.62A, 5V @ 9.81A, 5VSB @ 0.03A
  (Zhaoxin KX-U6580 2.5 GHz CPU with 8 GB 2400 MHz DDR4 memory)
- Operating Temperature
  -10°C ~ 60°C
- Storage Temperature
  -20°C ~ 60°C
- Operating Humidity
  20% ~ 95%, non-condensing
- Dimensions
  170 mm x 170 mm
- Weight
  GW:900g / NW:400g
- CE/FCC compliant

Features

- Mini-ITX SBC supports Zhaoxin 16nm KX-U6580/KX-U6780A(70W) on-board processor supports dual-channel DDR4 SO-DIMMs
- Dual independent display(VGA & DVI-I) support
- Up to 10 x RS-232 and 10 x USB 2.0 support
- USB 3.2 Gen1, SATA 6Gb/s, Full-size PCIe Mini Card slot and PCIe x16 expansion slot
- ATX power input

Dimensions *(Unit: mm)*

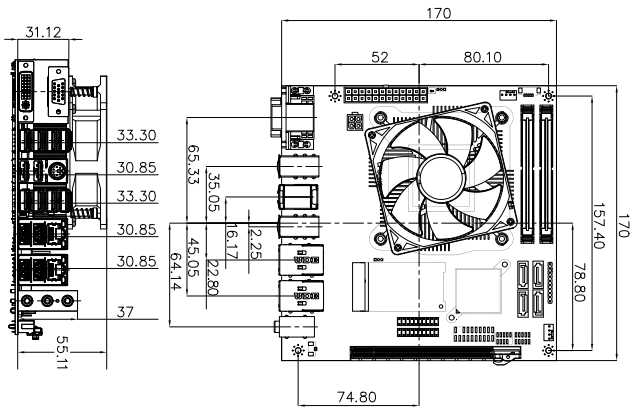

Packing List

1 x KINO-KX single board computer with CPU Cooler	1 x I/O Shielding
1 x SATA cable	1 x QIG

Ordering Information

Part No.	Description
KINO-KX-U6580-R10	Mini-ITX SBC supports Zhaoxin 16nm KX-U6580 (70W) on-board processor with PCIe Mini, VGA, DVI, USB 3.2 Gen1, SATA6Gb/s, COM, Audio and RoHS
KINO-KX-U6780A-R10**	Mini-ITX SBC supports Zhaoxin 16nm KX-U6780A (70W) on-board processor with PCIe Mini, VGA, DVI, USB 3.2 Gen1, SATA 6Gb/s, COM, Audio and RoHS
32200-025401-RS	RS-232 cable, 300mm, P=2.0, 40-pin
32205-002000-100-RS	RS-232/422/485 cable, 300mm, P=2.0, 40-pin
32205-002700-200-RS	RS-232 cable, 200mm, P=2.0
TPM-IN01-R20	20-pin Infineon TPM Module,S/W management tool, firmware V4.4

** By order production, MOQ: 100

gKINO-V1000 R1000

Mini-ITX SBC supports AMD® Ryzen™ Embedded V1000/R1000 Series on board SoC, DDR4, quadruple independent displays, dual GbE, SATA 6Gb/s, USB 3.2, M.2, COM, TPM 2.0, HD audio and RoHS

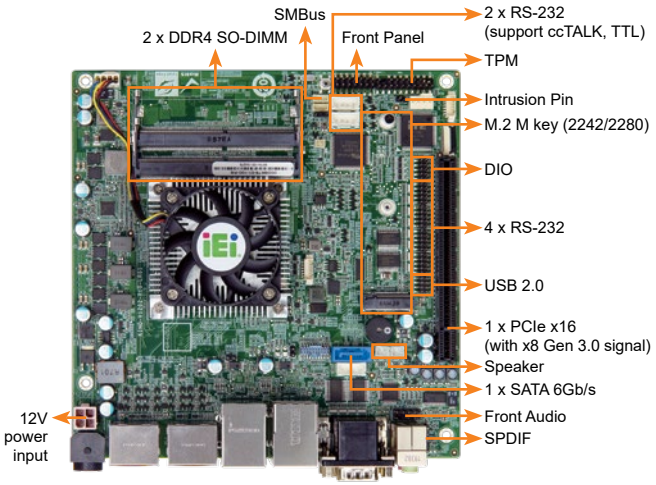

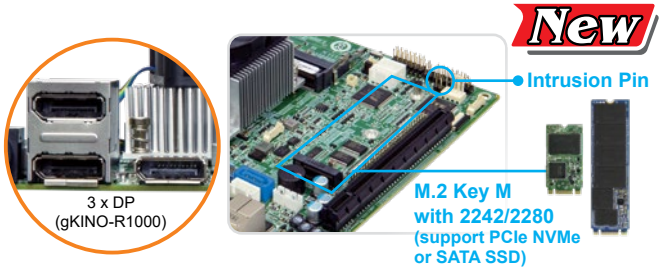

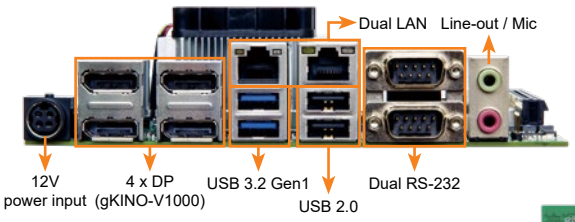



Specifications

- CPU
  AMD® Ryzen™ Embedded V1605B, Quad Core, 2MB Cache, 8 CU, 2.0GHz (3.6GHz), 12-25W
  AMD® Ryzen™ Embedded V1202B, Dual Core, 1MB Cache, 3 CU, 2.3GHz (3.2GHz), 12-25W
  AMD® Ryzen™ Embedded R1606G, Dual Core, 1MB Cache, 3 CU, 2.6GHz (3.5GHz), 12-25W
  AMD® Ryzen™ Embedded R1505G, Dual Core, 1MB Cache, 3 CU, 2.4GHz (3.3GHz), 12-25W
- BIOS: AMI BIOS
- Memory: 2 x SO-DIMM DDR4 2400MHz up to 64GB (ECC support)
- Graphic
  AMD Radeon™ VEGA GPU with up to 8 Compute Units
  H.2651 (10-bit) Decode and (8-bit) Encode support, VP9 (10-bit) Decode integrated
- Display Output
  4 x DP (gKINO-V1000): 4 x 4K UHD 3840x2160
  3 x DP (gKINO-R1000): 3 x 4K UHD 3840x2160
- Ethernet: 2 x GbE LAN (RTL 8119I)
- External I/O Interfaces
  2 x RS-232
  2 x USB 2.0
  2 x USB 3.2 Gen1 (5Gb/s)
- Internal I/O Interfaces
  1 x SATA 3.0 (6Gb/s) with 5/12V SATA power connector
  2 x RS-232 (support Cctalk, TTL)(1x4 pin, P=2.54)
  2 x USB 2.0 (2x4 pin, P=2.0)
  4 x RS-232 (2x5 pin, P=2.00)
- Audio
  Realtek ALC888S HD Audio codec
  2 x 6W audio amplifier L+R
  2 x Audio jacks (line-out, mic-in) on rear IO
  1 x Front audio (2x5 pin)
  1 x Onboard SPDIF output
- Front Panel
  1 x Front panel connector (2x7 pin, power LED, HDD LED, speaker, power button, reset button)
- LAN LED: 2 x LAN LED (1x2 pin)
- TPM: 1 x TPM 2.0 connector (2x10 pin) (LPC interface)
- SMBUS: 1 x SMBus (1x4 pin)
- I²C: 1 x I²C (1x4 pin)
- Digital I/O: 8-bit digital I/O (2x5 pin)
- Expansion
  1 x PCIe x16 slot (with x8 Gen 3.0 signal)
  1 x M.2 2242/2280 M key (PCIe x2/SATA)
- Watchdog Timer: Software programmable support 1~255 sec. system reset by super I/O
- Chassis Open: 1 x Intrusion pin (1x2 pin)
- Power Supply
  12V DC input
  1 x External DC jack (4-pin DIN)
  1 x Internal power connector (2x2 pin)
  Support AT/ATX mode
- Fan Connector
  1 x CPU smart (1x4 pin)
  1 x System fan (1x4 pin)
- Power Consumption
  12V@5.144A (AMD Ryzen V1605B 2.0GHz CPU with 2666 MHz 32GB DDR4 memory)
  12V@5.146A (AMD Ryzen R1606G 2.6GHz CPU with 2666 MHz 32GB DDR4 memory)
- Storage Temperature: -10°C ~ 70°C
- Operating temperature: 0°C ~ 60°C
- Operating Humidity: 5% ~ 95%, non-condensing
- Weight: GW:900g / NW:400g
- Dimensions: 170mm x 170mm
- CE/FCC compliant

Features

- Mini ITX form factor with AMD® Ryzen™ Embedded processor supports dual-channel ECC DDR4 SO-DIMMs
- Maximum up to quadruple DisplayPort output for multi-display support
- M.2 slot support SATA or PCIe (2242/2280) & PCIe x16 slot support
- Chassis intrusion detect pin and ECC support in gaming applications
- COM RS-232 support Cctalk, TTL
- TPM 2.0 hardware security function supported by TPM module

Dimensions *(Unit: mm)*

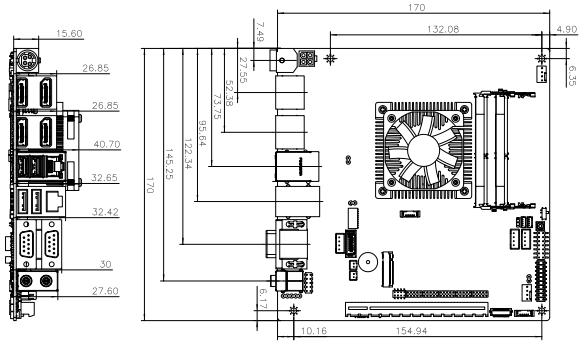

Packing List

1 x gKINO-V1000/R1000 series SBC with CPU cooler	1 x SATA cable
1 x I/O shielding	1 x QIG

Ordering Information

Part No.	Description
gKINO-V1605B-R10	Mini-ITX SBC supports AMD® Ryzen™ Embedded V1605B on board SoC (quad-core 2.0GHz, 15W) , DDR4, quadruple independent displays, quadruple DP, dual GbE, SATA 6Gb/s, USB 3.2, M.2, COM, TPM 2.0, HD audio and RoHS
gKINO-V1202B-R10	Mini-ITX SBC supports AMD® Ryzen™ Embedded V1202B on board SoC (dual-core 2.3GHz, 15W) , DDR4, quadruple independent displays, quadruple DP, dual GbE, SATA 6Gb/s, USB 3.2, M.2, COM, TPM 2.0, HD audio and RoHS
gKINO-R1606G-R10	Mini-ITX SBC supports AMD® Ryzen™ Embedded R1606G on board SoC (dual-core 2.6GHz, 15W) , DDR4, triple independent displays, triple DP, dual GbE, SATA 6Gb/s, USB 3.2, M.2, COM, TPM 2.0, HD audio and RoHS
gKINO-R1505G-R10	Mini-ITX SBC supports AMD® Ryzen™ Embedded R1505G on board SoC (dual-core 2.4GHz, 15W) , DDR4, triple independent displays, triple DP, dual GbE, SATA 6Gb/s, USB 3.2, M.2, COM, TPM 2.0, HD audio and RoHS
19800-000300-100-RS	RS-232 cable with bracket, 300mm, P=2.0
CB-USB02A-RS	Dual-port USB cable with bracket, 300mm, P=2.0
TPM-IN02-R20	20-pin Infineon TPM 2.0 module, software management tool, firmware v5.5

KINO-DH310

Mini-ITX SBC supports 14nm LGA1151 Intel® 8th/9th Generation Core™ i9/i7/ i5/i3, Celeron® and Pentium® processor, DDR4, dual independent displays, dual GbE LAN, M.2, SATA 6Gb/s, HD Audio and RoHS

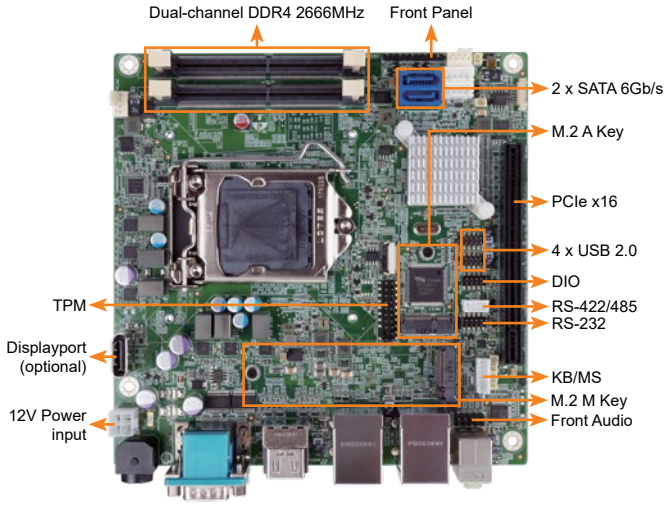

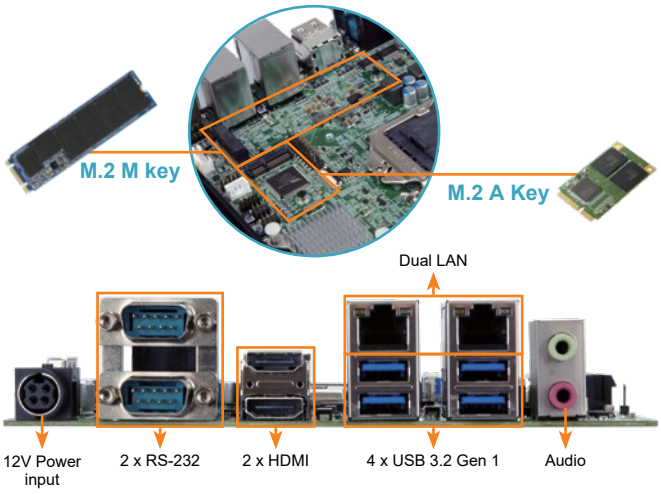

Specifications

- CPU
  LGA1151 socket supports 8th/9th generation Intel® Core™ i9/i7/i5/i3, Pentium® or Celeron® processor (35W/65W)
- Chipset
  Intel® H310
- BIOS
  AMI UEFI BIOS
- Memory
  Two 260-pin 2666/2400 MHz Dual-Channel DDR4 SDRAM Unbuffered SO-DIMM slots supported up to 64GB
- Graphics Engine
  Intel® HD Graphics Gen9 Engines with Low power 16 execution unit, supports DX11.3/12, OpenGL 4.3/4.4/4.5and OpenCL1.2/2.0/2.1
- Display Output
  Dual independent display
  2 x HDMI (up to 4096x2160@30Hz)
  1 x internal Displayport (up to 4096x2304@60Hz) (optional)
- Ethernet
  LAN1: Realtek RTL8111H PCIe GbE controller
  LAN2: Realtek RTL8111H PCIe GbE controller
- External I/O Interface
  4 x USB 3.2 Gen 1 (5Gb/s)
  2 x RS-232
- Internal I/O Interface
  1 x KB/MS (1x6 pin)
  4 x USB 2.0 (2x4 pin, P=2.0)
  1 x RS-422/485 (1x4 pin, P=2.0)
  1 x RS-232 (2x5 pin, P=2.0)
  2 x SATA 6G/s with 5/12V SATA power connector (No RAID)
- I²C: 1 x I²C (1x4 pin)
- TPM: 1 x TPM (2x10 pin)
- SMBus: 1 x SMBus (1x4 pin)
- Audio
  Realtek ALC888S HD Audio codec
  2 x Audio Jack (Lin-out, Mic-in)
  1 x Front audio (2x5 pin)
- Front Panel
  1 x Front Panel (1x10 pin, Power LED, HDD LED, Power Button, Reset Button)
- LAN LED: 2 x LAN LED (1x2 pin)
- Expansion
  1 x PCIe x16
  1 x M.2 M key (2280, Gen2 PCIe x2 only)
  1 x M.2 A Key (2230, PCIe x1 & USB 2.0)
- Digital I/O: 1 x 8-bit digital I/O (2x5 pin)
- FAN Connector: 2 x Smart fan connector (1x4 pin)
- Chassis Open
  1 x Chassis intrusion (1x2 pin)
- Power supply
  DC 12V input
  1 x External DC jack (4-pin DIN)
  1 x Internal power connector (2x2 pin)
  Support AT/ATX mode
  ErP/EuP Compliant
- Watchdog Timer: Software Programmable support 1~255 sec. System reset
- Power Consumption
  12V@11.32A (Intel® Core™ i7-8700 up to 4.60 GHz CPU with two 8GB 2666MHz DDR4 memory)
- Operating Temperature: 0°C ~ 60°C
- Storage Temperature: -10°C ~ 70°C
- Operating Humidity: 5% ~ 95%, non-condensing
- Dimension: 170mm x 170mm
- Weight: GW:900g / NW:400g
- CE/FCC compliant



Features

- LGA1151 Intel® 8th/9th generation Core™ i9/i7/i5/i3, Celeron® and Pentium® processor
- Dual-channel DDR4 2666MHz
- Support eDP & Dual HDMI
- Support M.2 A Key for WLAN expansion & M key for storage

Packing List

1 x KINO-DH310 single board computer	1 x SATA cable
1 x I/O Shielding	1 x QIG

Dimensions *(Unit: mm)*

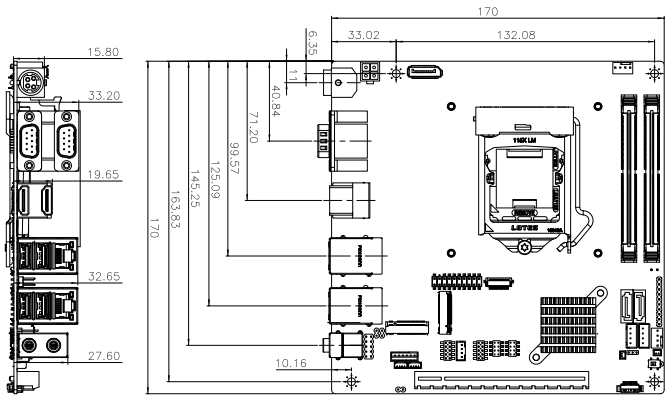

Ordering Information

Part No.	Description
KINO-DH310-R10	Mini-ITX SBC supports 14nm LGA1151 Intel® 8th/9th Generation Core™ i9/i7/i5/i3, Celeron® and Pentium® processor, DDR4, dual independent displays, dual GbE LAN, M.2, SATA 6Gb/s, HD Audio and RoHS
KINO-DH310-DP-R10**	Mini-ITX SBC supports 14nm LGA1151 Intel® 8th/9th Generation Core™ i9/i7/i5/i3, Celeron® and Pentium® processor, DDR4, dual independent displays, dual GbE LAN, M.2, SATA 6Gb/s, HD Audio, DP and RoHS
32000-070301-RS	Dual port USB cable, 210mm, P=2.0
32006-001100-201-RS	PS/2 KB/MS cable, 135mm, P=2.0
32205-002700-200-RS	RS-232 cable, 200mm, P=2.0
CF-115XA-R10	High performance LGA115X cooler kit ,1U chassis compatible, 73W
CF-115XC-R10	LGA1155/LGA1156 cooler kit, 1U chassis compatible, 45W
CF-115XD-R10	LGA1155/LGA1156 cooler kit, 1U chassis compatible, 65W
CF-115XE-R10	High-performance LGA1155/1156 cooler kit, 95W
TPM-IN02-R20	20-pin Infineon TPM 2.0 module, software management tool, firmware v5.5

** By order production, MOQ: 100

KINO-DH110

Mini-ITX SBC supports 14nm 6th/7th Generation LGA1151 Intel® Core™ i7/ i5/i3, Celeron® and Pemtium® Processor, DDR4, Dual Independent Display, Dual GbE LAN, USB 3.2 Gen 1 (5Gb/s), SATA 6Gb/s, M.2, HD Audio and RoHS

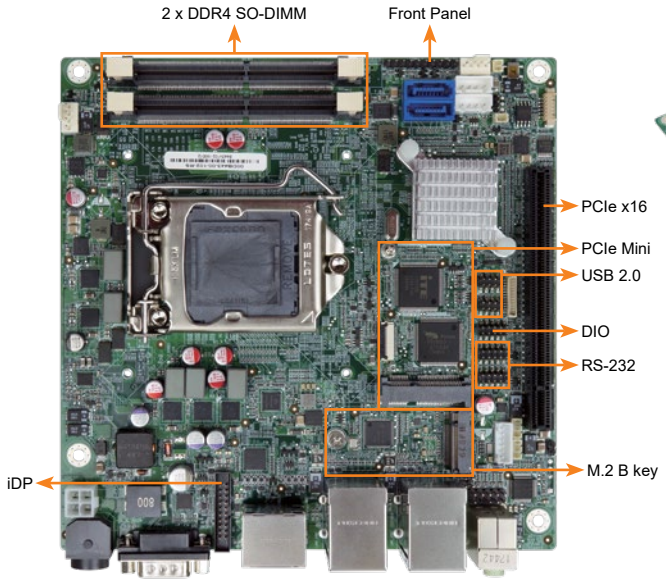

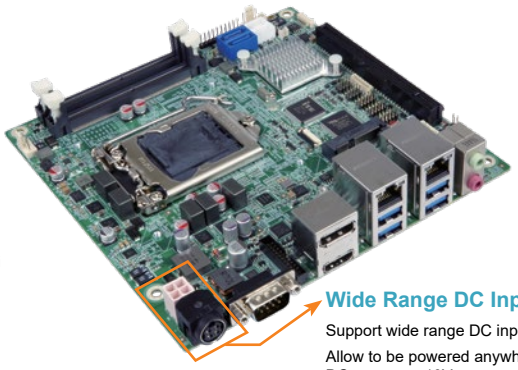

Wide Range DC Input Support

Support wide range DC input from 9V to 28V.

Allow to be powered anywhere, no matter if a 12V/24V DC source or 19V power adapter is available.



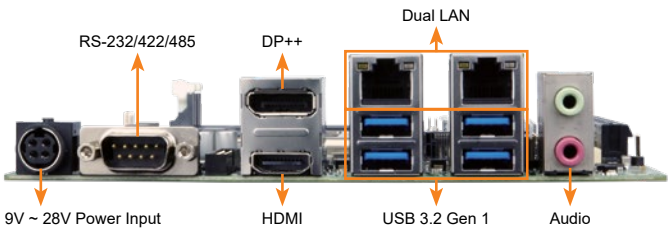



Specifications

- CPU
  LGA1151 socket supports 6th/7th generation Intel® Core™ i7/i5/i3, Celeron® and Pentium® processor
- System Chipset
  Intel® H110
- Memory
  Two 260-pin 2133MHz dual-channel DDR4 SDRAM unbuffered SO-DIMM support up to 32GB
- BIOS
  UEFI BIOS
- Graphic Engine
  Intel® HD Graphics Gen 9 engines with 16 low-power execution units, support DX2015, OpenGL 5.X, OpenCL2.x, ES 2.0
- Display Output
  Dual independent display
  1 x HDMI (up to 4096x2160@30Hz)
  1 x DP++ (up to 4096x2160@60Hz)
  1 x iDP interface for HDMI, LVDS, VGA, DVI, DP (up to 4096x2160@60Hz)
- Ethernet
  LAN1: Intel® I219LM PCIe controller
  LAN2: Intel® I211 PCIe controller
- External I/O Interface
  4 x USB USB 3.2 Gen 1 (5Gb/s)
  1 x RS-232/422/485
- Internal I/O Interface
  1 x KB/MS (1x6 pin)
  2 x RS-232 (2x5 pin, P=2.0)
  2 x SATA 6Gb/s
  4 x USB 2.0 (2x4 pin, P=2.0)
- SMBus: 1 x SMBus (1x4 pin)
- I²C: 1 x I²C (1x4 pin)
- Audio
  Realtek ALC888S HD Audio codec supports 7.1-channel
  2 x Audio jacks (line-out, mic-in) on rear IO
  1 x Front audio (2x5 pin)
- Front Panel
  1 x Front panel (1x10 pin, power LED, HDD LED, power button, reset button)
- LAN LED: 2 x LAN LED (1x2 pin)
- Expansion
  1 x Full-size PCIe Mini card slot (PCIe & USB)
  1 x M.2 B key (SATA)
  1 x PCIe x16 slot (Gen2)
- Watchdog Timer
  Software programmable, supports 1~255 sec. system reset
- Digital I/O: 8-bit digital I/O (2x5 pin)
- Fan Connector
  1 x CPU smart fan (1x4 pin)
  1 x System smart fan (1x4 pin)
- Power Supply
  9V ~ 28V DC input
  1 x External DC jack (4-pin DIN)
  Support ATX/AT mode
  1 x Internal power connector (2x2 pin)
- Power Consumption
  12V@12.16A (3.4GHz Intel® Core i7-6700 with two 2133MHz 16GB DDR4 memory)
- Operating Temperature: -20°C~60°C
- Storage Temperature: -30°C ~ 70°C
- Operating Humidity: 5% ~ 95%, non-condensing
- Dimensions: 170mm x 170mm
- Weight: GW: 900g / NW: 400g
- CE/FCC compliant

Features

- LGA1151 Intel® 6th/7th Generation Core™ i7/i5/i3, Celeron® and Pemtium® processor
- Dual-channel DDR4 2133MHz
- Support HDMI, DP++
- Support M.2 B key, PCIe Mini
- Support USB 3.2 Gen 1 (5Gb/s) and SATA 6Gb/s

Packing List

1 x KINO-DH110 single board computer	1 x SATA cable
1 x I/O shielding	1 x QIG

Ordering Information

Part No.	Description
KINO-DH110-R10	Mini-ITX Motherboard supports 14nm LGA1151 Intel® 6th/7th Generation Core™ i7/i5/i3, Celeron® and Pemtium® processor, DDR4, dual independent displays, dual GbE LAN, M.2, USB 3.2 Gen 1 (5Gb/s), SATA 6Gb/s, HD Audio and RoHS
32000-070301-RS	Dual USB Cable
32200-000049-RS	RS232 cable, 200mm
CF-115XC-R10	LGA1155/1156 kit, 1U chassis compatible, 45W
CF-115XD-R10	LGA1155/1156 kit, 1U chassis compatible, 65W
CF-115XE-R10	High performance LGA1155/LGA1156 cooler kit, 95W
DP-DP-R10	DisplayPort to DP converter board (for IEI connector)
DP-DVI-R10	DisplayPort to DVI-D converter board (for IEI connector)
DP-HDMI-R10	DisplayPort to HDMI converter board (for IEI connector)
DP-LVDS-R10	DisplayPort to 24 bit dual channel LVDS converter board (for IEI connector)
DP-VGA-R10	DisplayPort to VGA converter board (for IEI connector)

KINO-DAL

Mini-ITX SBC supports Intel® 14nm Atom™, Pentium® or Celeron® on-board SoC with HDMI/LVDS/VGA, Dual PCIe GbE, USB 3.2 Gen 1 (5Gb/s), PCIe Mini, M.2, SATA 6Gb/s, COM, Audio and RoHS

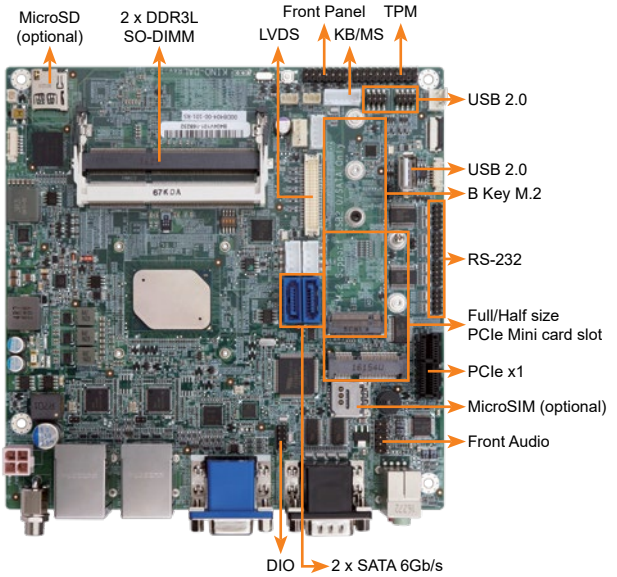

Triple Independent Displays

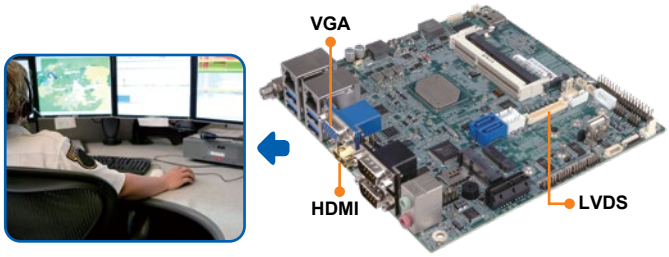

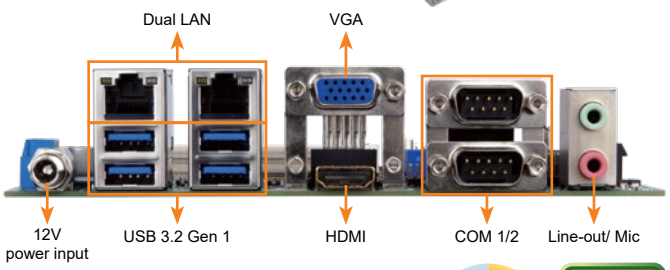



Specifications

- SoC
  Intel® Atom® x7-E3950 on-board SoC (up to 2.0GHz, quad-core, 2M Cache, TDP=12W)
  Intel® Atom® x5-E3940 on-board SoC (up to 1.8GHz, quad-core, 2M Cache, TDP=9W)
  Intel® Atom® x5-E3930 on-board SoC (up to 1.8GHz, dual-core, 2M Cache, TDP=6W)
  Intel® Pentium® N4200 on-board SoC (up to 2.5GHz, quad-core, 2M Cache, TDP=6W)
  Intel® Celeron® N3350 on-board SoC (up to 2.4GHz, dual-core, 2M Cache, TDP=6W)
- BIOS
  UEFI BIOS
- Memory
  Two 204-pin 1866/1600MHz Dual-channel DDR3L SO-DIMMs support up to 8GB
- Graphics Engine
  Intel® HD Graphics Gen9 Low Power; 18 Execution Units
  4K Codec Decode & Encode for HEVC 4 , H.264, VP8, SVC, MVC
- Display Output
  Triple independent display
  1 x 18/24-bit dual-channel LVDS (up to 1920x1200@60Hz)
  1 x VGA (up to 1920x1200@60Hz)
  1 x HDMI (up to 3840x2160@30Hz)
- Ethernet: 2 x PCIe GbE LAN Intel® i211 AT controller
- External I/O Interface
  4 x USB 3.2 Gen 1 (5Gb/s)
  2 x RS-232/422/485
- Internal I/O Interface
  1 x eMMC 5.0 (optional, up to 32G)
  1 x MicroSD card slot (optional)
  1 x USB 2.0 (180° Type-A)
  1 x KB/MS (1x6 pin)
  4 x RS-232 (2x5 pin, P=2.0)
  4 x USB 2.0 (2x4 pin, P=2.0)
  2 x SATA 6Gb/s with 12/5V SATA power connector
- SMBus: 1 x SMBus (1x4 pin)
- I²C: 1 x I²C (1x4 pin)
- TPM: 1 x TPM (2x10 pin)
- Audio
  Realtek ALC888S HD Audio codec
  2 x Audio jacks (line-out, mic-in) on rear IO
  1 x Front audio (2x5 pin)
- Front Panel
  1 x Front panel (2x7 pin, power LED, HDD LED, speaker, power button, reset button)
- LAN LED: 2 x LAN LED (1x2 pin)
- Expansion
  1 x PCIe x1 card slot
  1 x Full/Half-size PCIe Mini card slot
  1 x M.2 B key (2242/2260/2280, USB 2.0 & colay SATA2)
- Digital I/O: 8-bit digital I/O (2x5 pin)
- Fan Connector
  1 x CPU smart fan (1x4 pin)
  1 x System smart fan (1x3 pin)
- Power Supply
  12V only DC input as Default/ 9V~30V DC input (optional)
  1 x Internal power connector (2x2 pin)
  1 x External DC power Jackc (Ø5.5mm)
  Support AT/ATX mode
- Watchdog Timer
  Software programmable, supports 1~255 sec. system reset
- Power Consumption
  12V@3.64A (Intel® Pentium® N4200 CPU with two 8GB 1600MHz DDR3L memory)
- Operating Temperature: -20°C ~ 70°C / -40°C ~ 85°C (KINO-DAL-ExW2)
- Storage Temperature: -40°C ~ 85°C
- Operating Humidity: 5% ~ 95%, non-condensing
- Dimensions: 170mm x 170mm
- Weight: GW: 1100g / NW: 700g
- CE/FCC compliant

Features

- Mini-ITX SBC supports Intel® 14nm Atom®, Pentium® or Celeron® on-board SoC supports dual-channel DDR3L SO-DIMMs
- Triple independent display support
- Optional wide range 9V~30V DC input design
- Full size PCIe Mini slot for 3G/LTE expansion
- COM, USB 3.2 Gen 1 (5Gb/s), SATA 6Gb/s, M.2, eMMC 5.0 and audio support

Packing List

1 x KINO-DAL single board computer with heatsink	1 x I/O Shielding
1 x SATA with power cable kit	1 x QIG

Ordering Information

Part No.	Description
KINO-DAL-N2-R10**	Mini-ITX SBC supports Intel® 14nm quad-core Pentium® N4200 2.5GHz on-board SoC with HDMI/LVDS/VGA, Dual PCIe GbE, USB 3.2 Gen 1 (5Gb/s), PCIe Mini, M.2, SATA 6Gb/s, COM, Audio and RoHS
KINO-DAL-N1-R10	Mini-ITX SBC supports Intel® 14nm dual-core Celeron® N3350 2.3GHz on-board SoC with HDMI/LVDS/VGA, Dual PCIe GbE, USB 3.2 Gen 1 (5Gb/s), PCIe Mini, M.2, SATA 6Gb/s, COM, Audio and RoHS
KINO-DAL-J2-R10	Mini-ITX SBC supports Intel® 14nm quad-core Celeron® J3455 2.3GHz on-board SoC with HDMI/LVDS/VGA, Dual PCIe GbE, USB 3.2 Gen 1 (5Gb/s), PCIe Mini, M.2, SATA 6Gb/s, COM, Audio and RoHS
KINO-DAL-E3W2-R10**	Mini-ITX SBC supports Intel® 14nm quad-core Atom® x7-E3950 2.0GHz on-board SoC with HDMI/LVDS/VGA, Dual PCIe GbE, USB 3.2 Gen 1 (5Gb/s), PCIe Mini, M.2, SATA 6Gb/s, COM, Audio and RoHS, -40°C ~ 85°C
KINO-DAL-E2W2-R10**	Mini-ITX SBC supports Intel® 14nm quad-core Atom® x5-E3940 1.8GHz on-board SoC with HDMI/LVDS/VGA, Dual PCIe GbE, USB 3.2 Gen 1 (5Gb/s), PCIe Mini, M.2, SATA 6Gb/s, COM, Audio and RoHS, -40°C ~ 85°C
KINO-DAL-E1W2-R10**	Mini-ITX SBC supports Intel® 14nm dual-core Atom® x5-E3930 1.8GHz on-board SoC with HDMI/LVDS/VGA, Dual PCIe GbE, USB 3.2 Gen 1 (5Gb/s), PCIe Mini, M.2, SATA 6Gb/s, COM, Audio and RoHS, -40°C ~ 85°C
32000-070301-RS	Dual-port USB cable, 210mm, P=2.0
32006-001100-201-RS	PS/2 KB/MS cable, 135mm, P=2.0
32205-002700-200-RS	RS-232 cable, 200mm, P=2.0
TPM-IN02-R20	20-pin Infineon TPM 2.0 module, software management tool, firmware v5.5

**By order production, MOQ: 100

tKINO-AL

Thin Mini-ITX SBC supports Intel® 14nm Atom™, Pentium® or Celeron® on-board SoC with DP++, Dual PCIe GbE, USB 3.2 Gen 1 (5Gb/s), PCIe Mini, M.2, SATA 6Gb/s, COM, Audio and RoHS

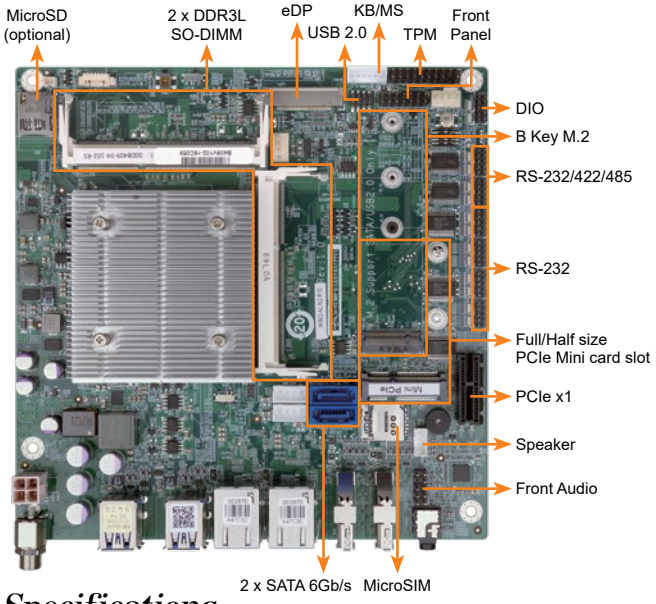

Flexible Selection of Modules with Different Functions

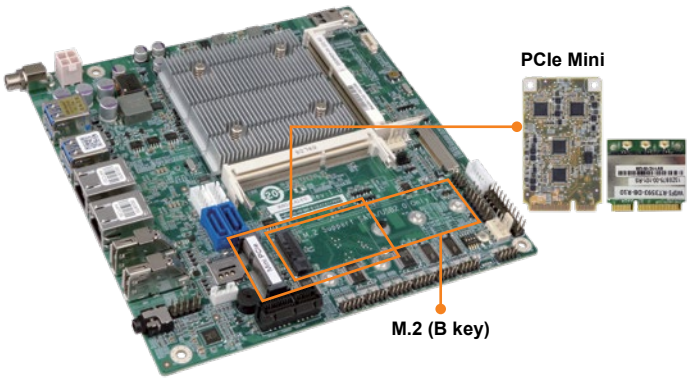

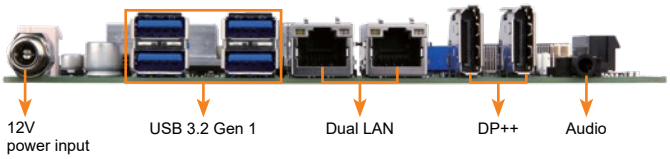



Specifications

- SoC
  Intel® Pentium® N4200 on-board SoC (up to 2.5GHz, quad-core, 2M Cache, TDP=6W)
  Intel® Celeron® N3350 on-board SoC (up to 2.4GHz, dual-core, 2M Cache, TDP=6W)
- BIOS
  UEFI BIOS
- Memory
  Two 204-pin 1867/1600MHz Dual-channel DDR3L DIMMs support up to 8GB
- Graphics Engine
  Intel® HD Graphics Gen9 Low Power; 18 Execution Units
  4K Codec Decode & Encode for HEVC , H.264, VP8, SVC, MVC
- Display Output
  Triple Independent Display
  1 x eDP (up to 3840x2160@60Hz)
  2 x DP++ (up to 4096x2160@60Hz)
- Ethernet
  2 x PCIe GbE LAN Realtek RTL8111
- External I/O Interface
  4 x USB 3.2 Gen 1 (5Gb/s)
- Internal I/O Interface
  1 x KB/MS (1x6 pin)
  1 x MicroSD card slot (optional)
  2 x USB 2.0 (2x4 pin, P=2.0)
  2 x SATA 6Gb/s with 12/5V SATA power connector (No RAID)
  2 x RS-232/422/485 (2x5 pin, P=2.0)
  4 x RS-232 (2x5 pin, P=2.0)
- SMBus
  1 x SMBus (1x4 pin)
- TPM
  1 x TPM (2x10 pin)
- Audio
  Realtek ALC269 HD Audio codec
  1 x Audio jacks (line-out, mic-in) on rear IO
  1 x Front audio (2x5 pin)
  1 x Speaker (1x4 pin)
- Front Panel
  1 x Front panel (2x7 pin, power LED, HDD LED, speaker, power button, reset button)
- LAN LED: 2 x LAN LED (1x2 pin)
- Expansion
  1 x PCIe x1 slot
  1 x Full/Half-size PCIe Mini card slot (w/ SIM holder)
  1 x M.2 B key (2242/2260/2280, USB 2.0 & colay SATA2)
- Digital I/O: 8-bit digital I/O (2x5 pin)
- FAN Connector
  1 x CPU smart fan (1x4 pin)
  1 x System smart fan (1x4 pin)
- Power supply
  12V only DC input as Default
  1 x Internal power connector (2x2 pin)
  1 x External DC power Jackc (Ø5.5mm)
  Support AT/ATX mode
- Watchdog Timer: Software programmable, supports 1~255 sec. system reset
- Power Consumption
  12V@2.58A (Intel® Pentium® N4200 CPU with two 8GB 1600MHz DDR3L memory)
- Operating Temperature: -20°C ~ 70°C
- Storage Temperature: -40°C ~ 85°C
- Operating Humidity: 5% ~ 95%, non-condensing
- Dimensions: 170mm x 170mm
- Weight: GW: 1100g / NW: 700g
- CE/FCC compliant

Features

- Thin Mini-ITX SBC supports Intel® 14nm Atom™, Pentium® or Celeron® on-board SoC supports dual-channel DDR3L SO-DIMMs
- Triple independent display support
- Full size PCIe Mini slot with SIM sockets for WWAN expansion
- COM, USB 3.2 Gen 1 (5Gb/s), SATA 6Gb/s and audio support

Packing List

1 x tKINO-AL single board computer with heatsink
1 x SATA with power cable kit
1 x I/O Shielding
1 x QIG

Ordering Information

Part No.	Description
tKINO-AL-N2-R10	Thin Mini-ITX SBC supports Intel® 14nm quad-core Pentium® N4200 2.5GHz on-board SoC with DP++, Dual PCIe GbE, M.2, USB 3.2 Gen 1 (5Gb/s), PCIe Mini, SATA 6Gb/s, COM, Audio and RoHS
tKINO-AL-N1-R10	Thin Mini-ITX SBC supports Intel® 14nm dual-core Celeron® N3350 2.4GHz on-board SoC with DP++, Dual PCIe GbE, M.2, USB 3.2 Gen 1 (5Gb/s), PCIe Mini, SATA 6Gb/s, COM, Audio and RoHS
32000-070301-RS	Dual-port USB cable, 210mm, P=2.0
32006-001100-201-RS	PS/2 KB/MS cable, 135mm, P=2.0
32205-002700-100-RS	RS-232 cable, 200mm, P=2.0
TPM-IN02-R20	20-pin Infineon TPM 2.0 module, software management tool, firmware v5.5

tKINO-ULT3

Thin Mini-ITX SBC supports Intel® Skylake-U Proccessor, 9~36V DC input, Dual HDMI, LVDS, SATA 6Gb/s, Dual Intel® GbE, USB 3.2 Gen 1 (5Gb/s), PCIe Mini, eMMC 5.0, HD audio and RoHS

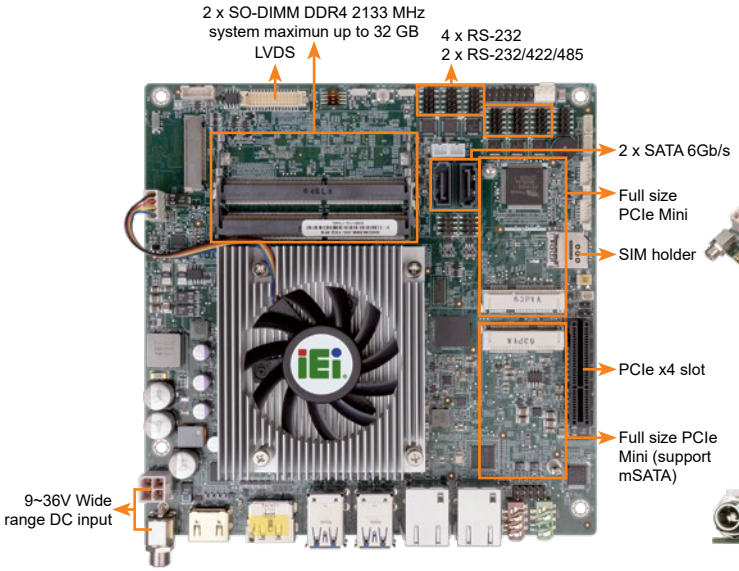

Multiple expansion with COM port, PCIe x4, and PCIe Mini.

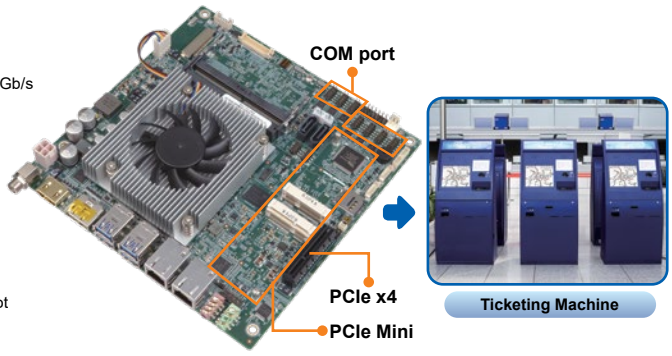

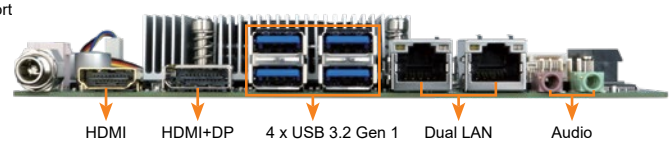



Specifications

- CPU
  6th generation Intel® mobile ULT on-board processor
  Intel® Core™ i7-6600U (up to 3.4GHz, dual-core, 4M Cache, TDP=15W)
  Intel® Core™ i5-6300U (up to 3.0GHz, dual-core, 3M Cache, TDP=15W)
  Intel® Core™ i3-6100U (up to 2.3GHz, dual-core, 3M Cache, TDP=15W)
  Intel® Celeron® 3955U (up to 2.0GHz, dual-core, 2M Cache, TDP=15W)
- BIOS
  UEFI BIOS
- Memory
  2 x SO-DIMM DDR4 2133MHz, system maximun up to 32GB
- Graphics Engine
  Intel® HD graphic
- Display Output
  1 x HDMI 1.4 (up to 4096x2160@24Hz)
  1 x HDMI/DP (up to 4096x2160@24Hz)
  1 x LVDS/eDP (select by switch)
- Ethernet
  LAN1: Intel® I219LM (with Intel® AMT11.0 support)
  LAN2: Intel® I211AT PCIe controller with NCSI support
- External I/O Interface
  4 x USB 3.2 Gen 1 (5Gb/s)
- Internal I/O Interface
  1 x eMMC 5.0 (optional, up to 32G)
  2 x RS-232/422/485 (2x5 pin, P=2.0)
  2 x SATA with 5V output (RAID 0/1 supported)
  4 x RS-232 (2x5 pin, P=2.0)
  4 x USB 2.0 (2x4 pin, P=2.0)
- Audio
  Realtek ALC888S HD Audio codec supports 7.1-channel
  2 x Audio jacks (line-out, mic-in) on rear IO
  1 x Front audio (2x5 pin)
- Front Panel
  1 x Front panel (2x7 pin, power LED, HDD LED,power button, reset button)
- LAN LED
  2 x LAN LED(1x2 pin)
- SMBUS: 1 x SMBus (1x4 pin)
- I²C: 1 x I²C (1x4 pin)
- Digital I/O: 8-bit digital I/O (2x5 pin)
- Expansion
  1 x PCIe x4 slot
  1 x Full-size PCIe Mini card slot (support mSATA, colay SATA2)
  1 x Full-size PCIe Mini card slot (with SIM holder)
- Watchdog Timer
  Software programmable, supports 1~255 sec. system reset by Super I/O
- Power Supply
  9~36V DC input
  1 x Internal power connector (2x2 pin)
  1 x External DC power Jackc (Ø5.5mm)
  Support AT/ATX mode
- Fan Connector
  1 x CPU smart fan (1x4 pin)
  1 x System fan (1x3 pin)
- Chassis Intrusion Detection: 1 x Chassis intrusion connector (1x2 pin)
- Power Consumption
  12V@4.68A (Intel® Core™ i7-6600U up to3.4GHz CPU with 16GB (8GB x 2) DDR4-2133 memory running in 3.2GHz)
- Operating Temperature: -20°C ~ 60°C
- Operating Humidity: 5% ~ 95%, non-condensing
- Dimensions: 170mm x 170 mm
- Weight: GW: 900g / NW: 375g
- CE/FCC compliant

Features

- Mini ITX form fator with Intel® Skylake-U processor support DDR4-2133 memory
- Wide range 9~36V DC Input
- Support dual HDMI (one HDMI/DP combo support), LVDS/eDP
- Intel® GbE LAN with Intel® AMT 11.0 supported
- SATA 6Gb/s, mSATA and eMMC 5.0 (option) supported
- High speed I/O for USB 3.2 Gen 1 (5Gb/s), PCIe x4, full-size PCIe Mini support

Packing List

1 x tKINO-ULT3 single board computer with CPU cooler
2 x SATA cable
1 x I/O shielding
1 x QIG

Ordering Information

Part No.	Description
tKINO-ULT3-i7-R10	Thin Mini-ITX SBC supports Intel® 6th Generation Mobile Core™ i7-6600U (15W) on-board Processor (ULT), 9~36V DC input, Dual HDMI, LVDS, eDP, SATA 6 Gb/s, Dual Intel® GbE, PCIe Mini, USB 3.2 Gen 1 (5Gb/s), eMMC 5.0, HD audio and RoHS
tKINO-ULT3-i5-R10	Thin Mini-ITX SBC supports Intel® 6th Generation Mobile Core™ i5-6300U (15W) on-board processor (ULT), 9~36V DC input, Dual HDMI, LVDS, eDP,SATA 6 Gb/s, Dual Intel® GbE, PCIe Mini, USB 3.2 Gen 1 (5Gb/s), eMMC 5.0, HD audio and RoHS
tKINO-ULT3-C-R10	Thin Mini-ITX SBC supports Intel® 6th Generation Mobile Celeron® 3955U (15W) on-board processor (ULT), 9~36V DC input, Dual HDMI, LVDS, eDP, SATA 6 Gb/s, Dual Intel® GbE, PCIe Mini, USB 3.2 Gen 1 (5Gb/s), eMMC 5.0, HD audio and RoHS
32205-002700-200-RS	RS-232/422/485, 200mm, P=2.0
34000-000645-RS	Fanless heatsink module, 93.5 x 84 x 30mm

KINO-DCM236

Mini-ITX SBC supports 6th Intel® Xeon® Processor E3 v5 series, Core™ i3, Celeron® per Intel® CM236, DDR4 with ECC support, HDMI 2.0, dual Intel® GbE, SATA 6Gb/s, USB 3.2 Gen 1 (5Gb/s), PCIe Mini, M.2, HD Audio and RoHS

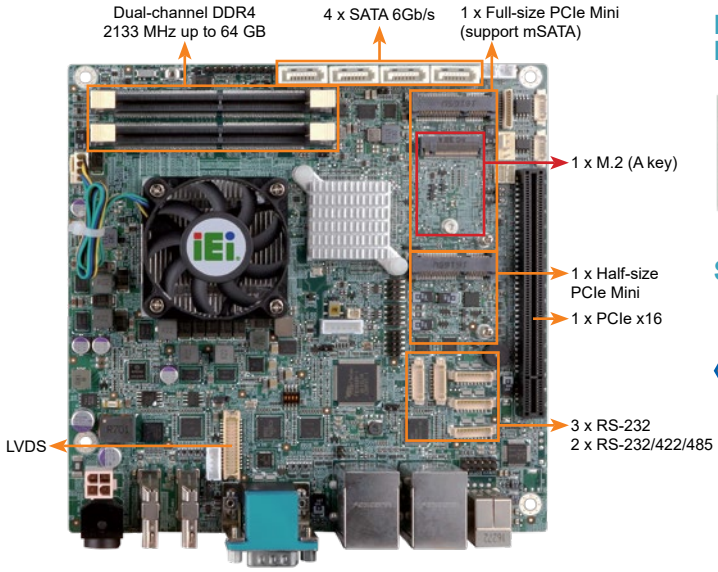

Flexible Selection of Modules with Different Functions

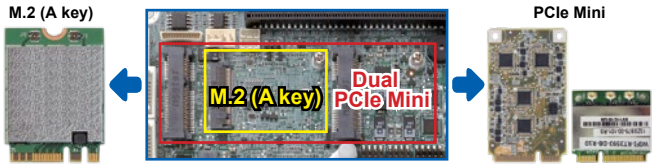

SO-DIMM DDR4 ECC support



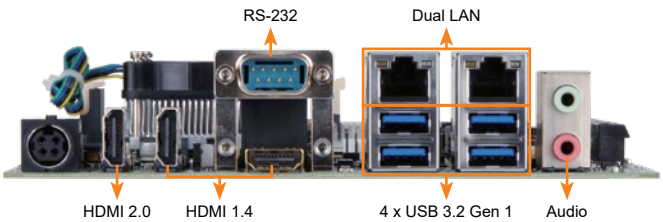



Specifications

- CPU
  6th generation Intel® processor
  Intel® Xeon® processor E3-1505M v5 (up to 3.7GHz, quad-core, 8M Cache, TDP=45W)
  Intel® Xeon® processor E3-1505L v5 (up to 2.0GHz, quad-core, 8M Cache, TDP=25W)
  Intel® Core™ i3-6102E processor (up to 1.90GHz, dual-core, 3M cache, TDP=25W)
  Intel® Celeron® processor G3902E (up to 1.60GHz, dual-core, 2M cache, TDP=25W)
- Chipset: Intel® CM236
- BIOS: UEFI BIOS
- Memory
  Two 260-pin 2133/1866 MHz dual-channel DDR4 ECC and non-ECC unbuffered SDRAM SO-DIMMs support up to 64GB
- Graphics Engine
  Intel® HD Graphics Gen 9 support for DX11/12, OCL 2.x, OGL 4.3/4.4, ES 2.0
- Display Output
  Triple independent display
  2 x HDMI 1.4 (up to 4096x2160@24Hz)
  1 x HDMI 2.0 (up to 4096x2160@60Hz)
  1 x 18/24-bit dual-channel LVDS (up to 1920x1200@60Hz)
- Ethernet
  LAN1: Intel® I219LM with (Intel® AMT 11.0 support)
  LAN2: Intel® I211 PCIe controller with NCSI support
- External I/O Interface
  4 x USB 3.2 Gen 1 (5Gb/s)
  1 x RS-232
- Internal I/O Interface
  1 x KB/MS (1x6 pin, P=2.0)
  2 x RS-232/422/485 (1x9 pin, P=1.25)
  3 x RS-232 (1x9 pin, P=1.25)
  4 x SATA 6Gb/s (RAID 0/1/5/10 support)
  4 x USB 2.0 (2x4 pin, P=2.0)
- Audio
  Realtek ALC888S HD Audio codec supports 7.1-channel
  2 x Audio jacks (line-out, mic-in) on rear IO
  1 x Front audio (2x5 pin)
- Front Panel
  1 x Front panel (2x7 pin, power LED, HDD LED, speaker, power button, reset button)
- LAN LED: 2 x LAN LED (1x2 pin)
- SMBus: 1 x SMBus (1x4 pin)
- I²C: 1 x I²C (1x4 pin)
- Digital I/O: 8-bit digital I/O (2x5 pin)
- Expansion
  1 x PCIe x16 slot
  1 x M.2 2230 (A key)
  1 x Full-size PCIe Mini card slot (support mSATA)
  1 x Half-size PCIe Mini card slot
- Cooler Module
  19100-000219-00-RS for Intel® Xeon® E3-1505M v5 (45W)
  19100-000203-00-RS for Intel® Xeon® E3-1505L v5/Core™ i3/Celeron® (25W)
- Watchdog Timer
  Software programmable supports 1~255 sec. system reset by super I/O
- Chassis Intrusion Detection: 1 x Chassis intrusion connector (1x2 pin)
- Power Supply
  12V DC input
  1 x External DC jack (4-pin DIN)
  1 x Internal power connector (2x2 pin)
  Support AT/ATX mode
- Fan Connector
  1 x CPU smart (1x4 pin)
  1 x System fan (1x4 pin)
- Power Consumption
  12V@6.93A (Intel Xeon E3-1505M V5 2.8GHz CPU with 32 GB (two 16 GB) 2133 MHz DDR4 memory)
- Operating Temperature: -20°C ~ 60°C
- Operating Humidity: 5% ~ 95%, non-condensing
- Dimensions: 170mm x 170 mm
- Weight: GW: 900g / NW: 450g
- CE/FCC compliant

Features

- Mini ITX form factor with 6th Intel® Xeon® Processor E3 v5 series, Core™ i3,Celeron® support DDR4-2133 memory with ECC support
- HDMI 2.0
- ECC support
- Triple display with independent audio
- PCIe x16, dual PCIe Mini and M.2 A key feature support for various function module
- Rich High speed I/O interface for USB 3.2 Gen 1 (5Gb/s) and SATA 6Gb/s
- Support IEI jumpless

Packing List

1 x KINO-DCM236 single board computer with CPU cooler	1 x I/O shielding
2 x SATA cable	1 x QIG

Ordering Information

Part No.	Description
KINO-DCM-236-E3-R11	Mini-ITX SBC supports 6th Intel® Xeon® processor E3-1505M dual Intel® GbE, USB 3 2 Gen 1 (5Gb/s), PCIe Mini, M 2, HD Audio and RoHS
KINO-DCM-236-E3E-R11	Mini-ITX SBC supports 6th Intel® Xeon® processor E3-1505L v5 (25W), DDR4 with ECC support, HDMI 2 0, SATA 6Gb/s, dual Intel® GbE, USB 3 2 Gen 1 (5Gb/s), PCIe Mini, M 2, HD Audio and RoHS
KINO-DCM-236-i3E-R11**	Mini-ITX SBC supports 6th Intel® Core™ i3-6102E processor (25W), DDR4 with ECC support, HDMI 2.0, SATA 6Gb/s, dual Intel® GbE, USB 3.2 Gen 1 (5Gb/s), PCIe Mini, M.2, HD Audio and RoHS
KINO-DCM-236-CE-R11**	Mini-ITX SBC supports 6th Intel® Celeron® processor G3902E (25W), DDR4 with ECC support, HDMI 2.0, SATA 6Gb/s, dual Intel® GbE, USB 3.2 Gen 1 (5Gb/s), PCIe Mini, M.2, HD Audio and RoHS
32001-008600-200-RS	Dual-port USB cable, 210mm, P=2.0
32005-003501-200-RS	RS-232/422/485 cable, 150mm, P=1.25
32006-001100-201-RS	PS/2 KB/MS cable, 135mm/110mm, P=2.0

**By order production, MOQ: 100

KINO-DQM170

Mini-ITX SBC supports 6th Intel® Core™ Mobile CPU, HDMI 2.0, M.2, SATA 6Gb/s, dual Intel® GbE, USB 3.2 Gen 1 (5Gb/s), PCIe Mini, HD Audio and RoHS

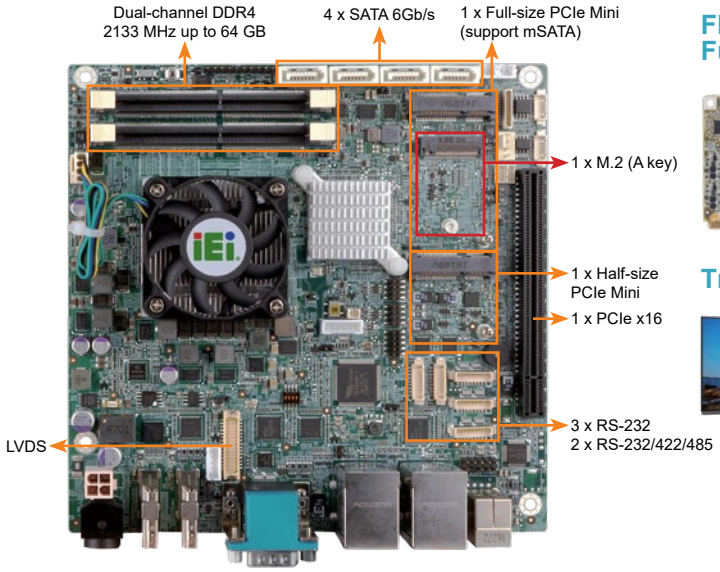

Flexible Selection of Modules with Different Functions

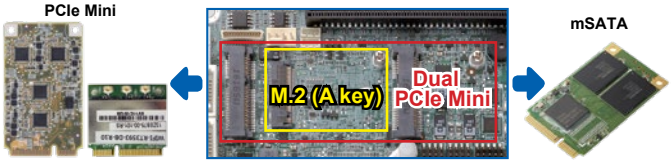

Triple Independent Displays

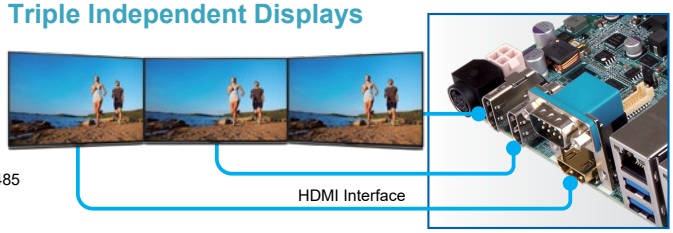

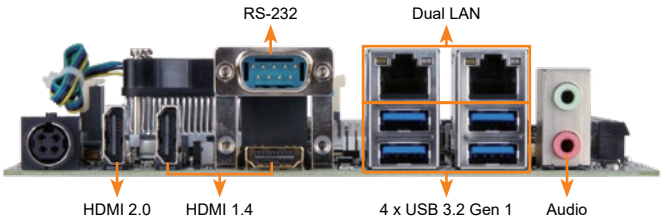



Specifications

- CPU
  6th generation Intel® Core™ mobile processor
  Intel® Core™ i7-6820EQ (up to 3.5GHz, quad-core, 8M cache, TDP=45W)
  Intel® Core™ i5-6440EQ (up to 3.4GHz, quad-core, 6M cache, TDP=45W)
  Intel® Core™ i3-6102E (up to 1.90GHz, dual-core, 3M cache, TDP=25W)
- Chipset: Intel® QM170
- BIOS: UEFI BIOS
- Memory
  Two 260-pin 2133/1866 MHz dual-channel unbuffered DDR4 SDRAM SO-DIMMs support up to 64GB
- Graphics Engine
  Intel® HD Graphics Gen 9 support for DX11/12, OCL 2.x, OGL 4.3/4.4, ES 2.0
- Display Output
  Triple independent display
  2 x HDMI 1.4 (up to 4096x2160@24Hz)
  1 x HDMI 2.0 (up to 4096x2160@60Hz)
  1 x 18/24-bit dual-channel LVDS (up to 1920x1200@60Hz)
- Ethernet
  LAN1: Intel® I219LM with (Intel® AMT 11.0 support)
  LAN2: Intel® I211 PCIe controller with NCSI support
- External I/O Interface
  4 x USB 3.2 Gen 1 (5Gb/s)
  1 x RS-232
- Internal I/O Interface
  1 x KB/MS (1x6 pin, P=2.0)
  2 x RS-232/422/485 (1x9 pin, P=1.25)
  3 x RS-232 (1x9 pin, P=1.25)
  4 x SATA 6Gb/s (RAID 0/1/5/10 support)
  4 x USB 2.0 (2x4 pin, P=2.0)
- Audio
  Realtek ALC888S HD Audio codec supports 7.1-channel
  2 x audio jacks(line out, mic in) on rear I/O (colay with 3x audio jack)
  1 x Front audio (2x5 pin)
- Front Panel
  1 x Front panel (2x7 pin, power LED, HDD LED, speaker, power button, reset button)
- LAN LED: 2 x LAN LED (1x2 pin)
- SMBus: 1 x SMBus (1x4 pin)
- I²C: 1 x I²C (1x4 pin)
- Digital I/O: 8-bit digital I/O (2x5 pin)
- Expansion
  1 x PCIe x16 slot
  1 x M.2 2230 (A key)
  1 x Full-size PCIe Mini card slot (support mSATA)
  1 x Half-size PCIe Mini card slot
- Cooler Module
  19100-000219-00-RS for Intel® Core™ i7/i5 (45W)
  19100-000203-00-RS for Intel® Core™ i3/Celeron® (25W)
- Watchdog Timer
  Software programmable supports 1~255 sec. system reset by super I/O
- Chassis Intrusion Detection: 1 x Chassis intrusion connector (1x2 pin)
- Power Supply
  12V DC input
  1 x External DC jack (4-pin DIN)
  1 x Internal power connector (2x2 pin)
  Support AT/ATX mode
- Fan Connector
  1 x CPU smart (1x4 pin)
  1 x System fan (1x4 pin)
- Power Consumption
  12V@5.08A (Intel® Core™ i7-6820EQ, 3.5GHz CPU with 16 GB (two 8 GB) 2133 MHz DDR4 memory)
- Operating Temperature: -20°C ~ 60°C
- Operating Humidity: 5% ~ 95%, non-condensing
- Dimensions: 170mm x 170 mm
- Weight: 900g / NW: 450g
- CE/FCC compliant

Features

- Mini ITX form factor with 6th Gen Intel® Core™ i7/i5/i3/Celeron® processor support DDR4 memory
- Support HDMI 2.0 (4096x2160@60Hz)
- Triple display with independent audio via HDMI
- PCIe x16, dual PCIe Mini and M.2 A key feature support for various function module
- Rich High speed I/O interface for USB 3.2 Gen 1 (5Gb/s) and SATA 6Gb/s
- Support IEI jumpless

Packing List

1 x KINO-DQM170 single board computer with CPU cooler
2 x SATA cable
1 x I/O shielding
1 x QIG

Ordering Information

Part No.	Description
KINO-DQM170-i7-R11	Mini-ITX SBC with BGA 1440 supports 6th Gen Intel® Core™ i7-6820EQ processor, HDMI 2.0, SATA 6Gb/s, dual Intel® GbE, USB 3.2 Gen 1 (5Gb/s), PCIe Mini, M.2, HD Audio and RoHS
KINO-DQM170-i3E-R11	Mini-ITX SBC with BGA 1440 supports 6th Gen Intel® Core™ i3-6102E processor, HDMI 2.0, SATA 6Gb/s, dual Intel® GbE, USB 3.2 Gen 1 (5Gb/s), PCIe Mini, M.2, HD Audio and RoHS
32001-008600-200-RS	Dual-port USB cable, 210mm, P=2.0
32001-008600-200-RS	Dual-port USB cable, 210mm, P=2.0
32005-003501-200-RS	RS-232/422/485 cable, 150mm, P=1.25
32006-001100-201-RS	PS/2 KB/MS cable, 135mm/110mm, P=2.0

KINO-AQ170

Mini-ITX SBC supports LGA 1151 Intel® Core™ i7/i5/i3, Pentium® or Celeron® CPU with Intel® Q170, HDMI 2.0/HDMI+DP/VGA, Dual Intel® GbE, SATA 6Gb/s, USB 3.2 Gen 1 (5Gb/s), PCIe Mini, HD Audio and RoHS

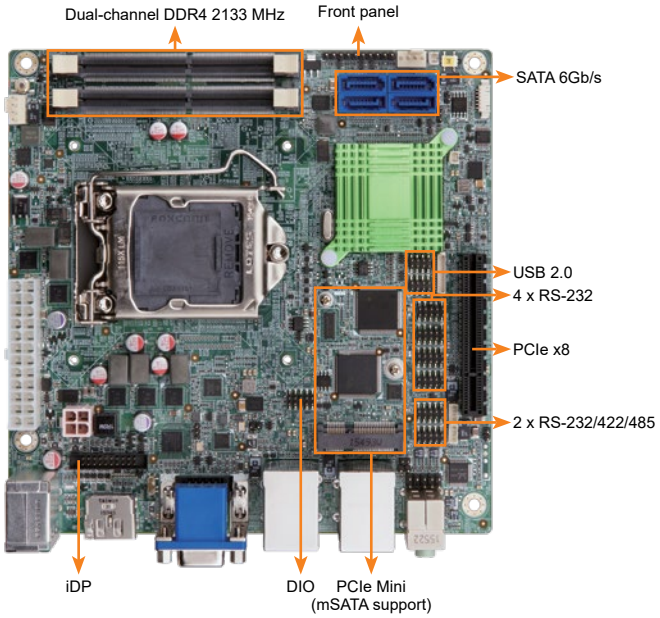

HDMI 2.0 Ultra HD (4,096x2,160@60Hz)

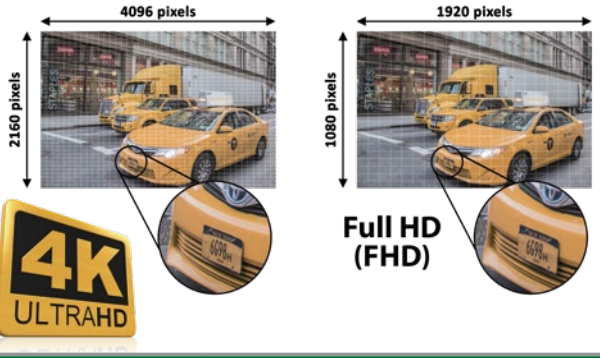

	HDMI 1.4	HDMI 2.0
Bandwidth	10.2Gbps	18Gbps
4K@30hz	Yes	Yes
4K@60hz	No	Yes
Up to 32 Audio Channels	No	Yes

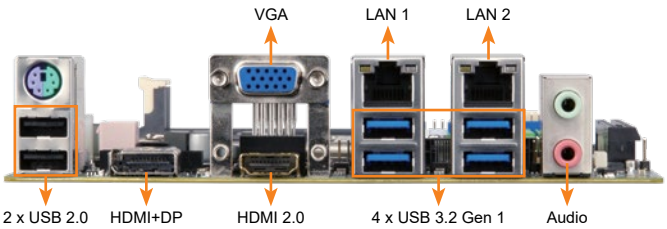



Specifications

- CPU
  LGA 1151 socket supports Intel® 6th/7th generation Core™ i7/i5/i3, Pentium® or Celeron® processor
- Chipset
  Intel® Q170
- BIOS
  UEFI BIOS
- Memory
  Two 260-pin 2133 MHz dual-channel DDR4 SDRAM SO-DIMM support up to 64GB
- Graphics Engine
  Intel® HD Graphics Gen 9 support for DX11/12, OCL 2.x, OGL 4.3/4.4, ES 2.0
  Decode/Encode for HEVC, VP8, VP9 2, VDENC
- Display Output
  Triple independent display
  1 x HDMI 2.0 (up to 4096x2160@60Hz)
  1 x HDMI/DP (up to 3840x2160@60Hz)
  1 x VGA (up to 1920x1200)
  1 x iDP interface for HDMI, LVDS, VGA, DVI, DP (up to 3840x2160@60Hz)
- Ethernet
  LAN1: Intel® I219LM with (Intel® AMT 11.0 support)
  LAN2: Intel® I211 PCIe controller with NCSI support
- External I/O Interface
  2 x USB 2.0
  4 x USB 3.2 Gen 1 (5Gb/s)
- Internal I/O Interface
  2 x RS-232/422/485 (2x5 pin, P=2.0)
  4 x RS-232 (2x5 pin, P=2.0)
  4 x SATA 6Gb/s (RAID 0/1/5/10 supported)
  4 x USB 2.0 (2x4 pin, P=2.0)
- Audio
  Realtek ALC888S HD Audio codec
  2 x Audio jacks (line-out, mic-in) on rear IO
  1 x Front audio (2x5 pin)
- Front Panel
  1 x Front panel (1x10 pin, power LED, HDD LED, power button, reset button)
- LAN LED: 2 x LAN LED (1x2 pin)
- SMBus: 1 x SMBus (1x4 pin)
- I²C: 1 x I²C (1x4 pin)
- Digital I/O: 8-bit digital I/O (2x5 pin)
- Expansion
  1 x PCIe x8 slot
  1 x Full-size PCIe Mini card slot (support mSATA)
- Chassis Intrusion Detection: 1 x Chassis intrusion connector (1x2 pin)
- Watchdog Timer
  Software programmable supports 1~255 sec. system reset by super I/O
- Power Supply
  ATX power supply
- Fan Connector
  1 x CPU smart fan (1x4 pin)
  1 x System smart fan (1x4 pin)
- Power Consumption
  3.3V@0.62A, 5V@3.3A, 12V@7.51A, 5VSB@0.23A
  (Intel® Core™ i7 6700K 4.0GHz CPU with 16 GB (two 8 GB) 2133 MHz DDR4 memory)
- Operating Temperature: -20°C ~ 60°C
- Operating Humidity: 5% ~ 95%, non-condensing
- Dimensions: 170mm x 170mm
- Weight: GW: 900g / NW: 450g
- CE/FCC compliant

Features

- LGA 1151 Intel® 6th/7th generation Core™ i7/i5/i3, Pentium® or Celeron® processor and DDR4 2133MHz memory support
- Support HDMI 2.0 (4096x2160@60Hz)
- Dual Intel® GbE support Intel® AMT 11.0
- Triple display via HDMI 2.0/HDMI/DP 1.2/VGA/iDP
- High speed I/O interface for USB 3.2 Gen 1 (5Gb/s), SATA 6Gb/s and mSATA support
- Support IEI jumpless

Packing List

1 x KINO-AQ170 single board computer	2 x SATA cable
1 x I/O shielding	1 x QIG

Ordering Information

Part No.	Description
KINO-AQ170-R10	Mini-ITX SBC supports 6th generation Intel® Core™ i7/i5/i3, Pentium® and Celeron® processor, HDMI 2.0/HDMI/DP/VGA, SATA 6Gb/s, dual Intel® GbE, USB 3.2 Gen 1 (5Gb/s), PCIe Mini, HD Audio and RoHS
32001-008600-200-RS	Dual-port USB cable, 210mm, P=2.0
32205-002700-200-RS	RS-232/422/485 cable, 230mm, P=2.0
CF-115XC-R10	LGA1155/LGA1156 cooler kit, 1U chassis compatible, 45W
CF-115XD-R10	LGA1155/LGA1156 cooler kit, 1U chassis compatible, 65W
CF-115XE-R10	High performance LGA1155/LGA1156 cooler kit, 95W
DP-DP-R10	DisplayPort to DP converter board (for IEI connector)
DP-DVI-R10	DisplayPort to DVI-D converter board (for IEI connector)
DP-HDMI-R10	DisplayPort to HDMI converter board (for IEI connector)
DP-LVDS-R10	DisplayPort to 24-bit dual-channel LVDS converter board (for IEI connector)
DP-VGA-R10	DisplayPort to VGA converter board (for IEI connector)

tKINO-BW

Thin Mini-ITX SBC supports 14nm Intel® Pentium®/Celeron® on-board SoC, 9~30V DC input, VGA/LVDS/DP+HDMI, SATA 6Gb/s, dual GbE, USB 3.2 Gen 1 (5Gb/s), HD Audio and RoHS

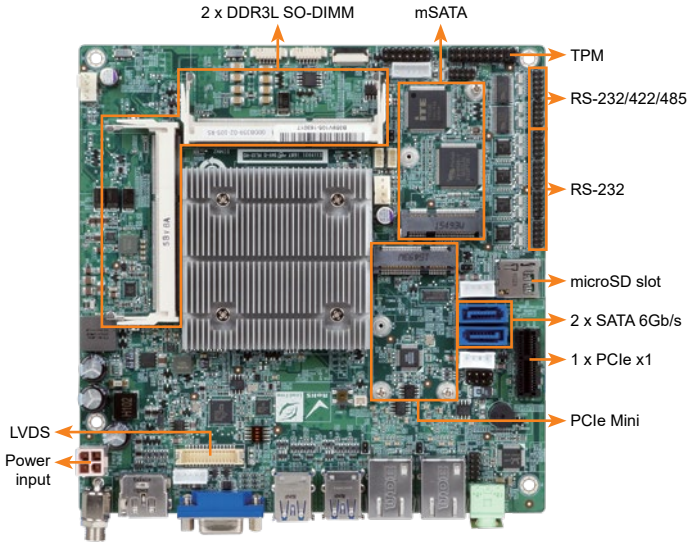

Three Digital Display Interfaces

3 independent displays under Window® 7 OS and up

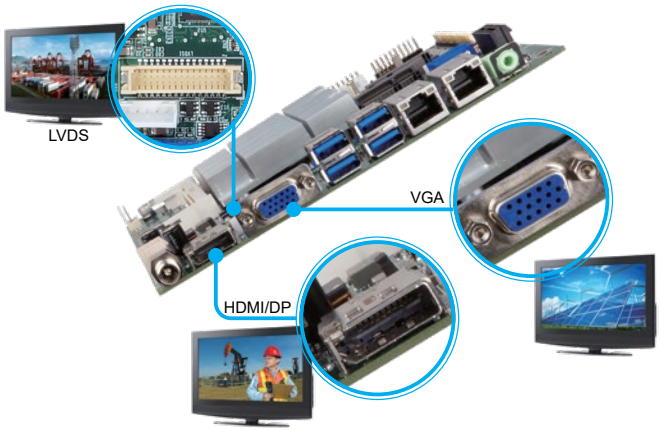

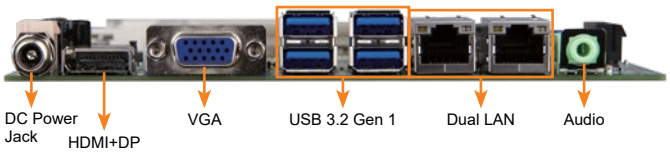



Specifications

- SoC
  Intel® Pentium® N3710 on-board SoC (up to 2.56GHz, quad-core, 2MB cache, TDP=6W)
  Intel® Celeron® N3160 on-board SoC (up to 2.24GHz, quad-core, 2MB cache, TDP=6W)
  Intel® Celeron® N3060 on-board SoC (up to 2.48GHz, dual-core, 2MB cache, TDP=6W)
  Intel® Celeron® N3010 on-board SoC (up to 2.24GHz, dual-core, 2MB cache, TDP=4W)
- BIOS
  UEFI BIOS
- Memory
  Two 204-pin 1333/1600 MHz single-channel DDR3L SDRAM unbuffered SO-DIMM slots support up to 8 GB
- Graphics Engine
  Intel® HD Graphics Gen 8 Engines with 16 low-power execution units, supporting DX11.1, OpenGL 4.2 and OpenCL1.2
- Display Output
  Triple independent display
  1 x HDMI/DP (up to 3840x2160@30Hz)
  1 x 18/24-bit dual-channel LVDS (up to 1920x1200@60Hz)
  1 x VGA (up to 1920x1200@60Hz)
- Ethernet
  Dual Realtek RTL8111E PCIe GbE controller
- External I/O Interface
  4 x USB 3.2 Gen 1 (5Gb/s)
- Internal I/O Interface
  1 x KB/MS (1x6 pin)
  1 x MicroSD card slot
  1 x mSATA (colay SATA2)
  2 x RS-232/422/485 (2x5 pin, P=2.0)
  2 x SATA 6Gb/s with 5V output
  2 x USB 2.0 (2x4 pin, P=2.54)
  4 x RS-232 (2x5 pin, P=2.0)
- Front Panel
  1 x Front panel (2x7 pin, power LED, HDD LED, speaker, power button, reset button)
- LAN LED
  2 x LAN LED (1x2 pin)
- SMBus
  1 x SMBus (1x4 pin)
- TPM
  1 x TPM (2x10 pin)
- I²C
  1 x I²C (1x4 pin)
- Digital I/O
  8-bit digital I/O (2x5 pin)
- Expansion
  1 x PCIe x1
  1 x Full-size PCIe Mini card slot
- Audio
  Realtek ALC888S HD Audio codec
  1 x Audio jacks (line-out) on rear IO
  1 x Front audio (2x5 pin)
- Watchdog Timer: Software programmable supports 1~255 sec. system reset
- Power Supply
  1 x External DC power jack (ø5.5 mm)
  1 x Internal power connector (2x2 pin)
  Input Voltage Range: 9V ~ 30V
  Support AT/ATX mode
- Fan Connector
  1 x CPU smart fan (1x4 pin)
  1 x System smart fan (1x4 pin)
- Power Consumption
  12V@1.61A (Intel® Celeron® N3710 CPU with two 4 GB 1600 MHz DDR3L memory)
- Operating Temperature: -20°C ~ 60°C
- Storage Temperature: -30°C ~ 70°C
- Operating Humidity: 5% ~ 95%, non-condensing
- Weight: GW: 900g / NW: 400g
- CE/FCC compliant

Features

- Thin Mini-ITX form factor with 14nm Intel® Pentium®/Celeron® on-board SoC processor supports DDR3L memory
- Supports USB 3.2 Gen 1 (5Gb/s), two SATA 6Gb/s
- Triple independent display, supporting 4K resolution
- Supports IEI jumperless function

Packing List

1 x tKINO-BW single board computer with heatsink
1 x I/O shielding
1 x SATA cable
1 x QIG

Ordering Information

Part No.	Description
tKINO-BW-N3-R20	Thin Mini-ITX SBC supports Intel® Celeron® quad-core processor N3160 up to 2.24GHz (6W), VGA/LVDS/DP+HDMI, SATA, dual GbE, USB 3.2 Gen 1 (5Gb/s), HD Audio and RoHS
tKINO-BW-N2-R20	Thin Mini-ITX SBC supports Intel® Celeron® dual-core processor N3060 up to 2.48GHz (6W), VGA/LVDS/DP+HDMI, SATA, dual GbE, USB 3.2 Gen 1 (5Gb/s), HD Audio and RoHS
tKINO-BW-N1-R20**	Thin Mini-ITX SBC supports Intel® Celeron® dual-core processor N3010 up to 2.24GHz (4W), VGA/LVDS/DP+HDMI, SATA, dual GbE, USB 3.2 Gen 1 (5Gb/s), HD Audio and RoHS
32205-002700-200-RS	RS-232/422/485 cable, 200mm, P=2.0
TPM-IN01-R20	20-pin Infineon TPM module, software management tool, firmware v3.17

**By order production, MOQ: 100

KINO-DBT

Mini-ITX SBC supports 22nm Intel® Atom™ or Celeron® on-board SoC, VGA/DVI/iDP, dual Realtek PCIe GbE, USB 3.2 Gen 1 (5Gb/s), SATA, HD Audio, RoHS

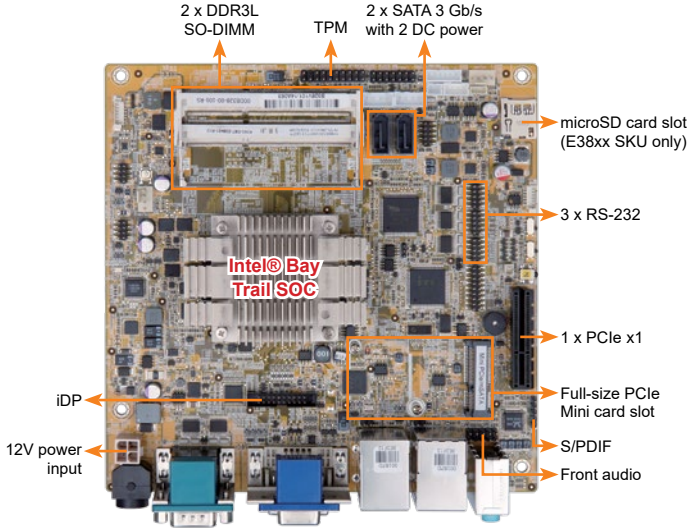

iDP (IEI Internal DisplayPort)

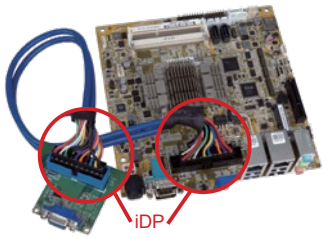

Model	Output	External Power
DP-VGA-R10	VGA	No
DP-HDMI-R10	HDMI	No
DP-DVI-R10	DVI	No
DP-LVDS-R10	LVDS	Yes
DP-DP-R10	DP	No

Easy Installation on the Chassis

iDP converter cards with brackets

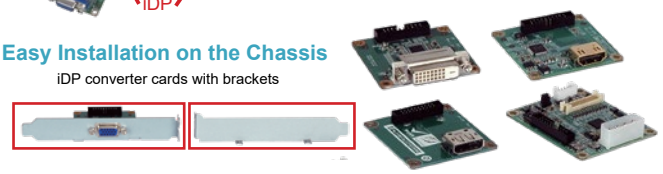

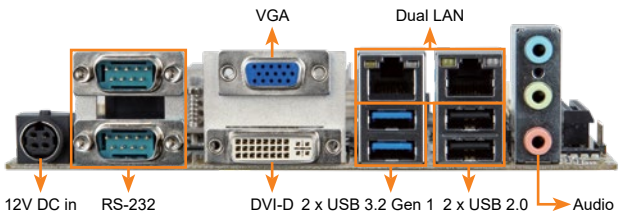



Specifications

- SoC
  Intel® Atom™ E3845 on-board SoC (1.91GHz, quad-core, 2MB cache, TDP=10W)
  Intel® Atom™ E3827 on-board SoC (1.75GHz, dual-core, 1MB cache, TDP=8W)
  Intel® Atom™ E3826 on-board SoC (1.46GHz, dual-core, 1MB cache, TDP=7W)
  Intel® Atom™ E3825 on-board SoC (1.33GHz, dual-core, 1MB cache, TDP=6W)
  Intel® Atom™ E3815 on-board SoC (1.46GHz, single-core, 512KB cache, TDP=5W)
  Intel® Celeron® J1900 on-board SoC (2GHz, quad-core, 2MB cache, TDP=10W)
  Intel® Celeron® N2930 on-board SoC (1.83GHz, quad-core, 2MB cache, TDP=7.5W)
  Intel® Celeron® N2807 on-board SoC (1.58GHz, dual-core, 2MB cache, TDP=4.5W)
- BIOS
  UEFI BIOS
- Memory
  Two 204-pin 1066/1333 MHz dual-channel unbuffered DDR3L SDRAM SO-DIMM support up to 8 GB (J1900, N2930, E3845, E3827, E3826)
  One 204-pin 1066/1333 MHz dual-channel unbuffered DDR3L SDRAM SO-DIMM supports up to 8 GB (E3825, E3815) or 4 GB (N2807)
- Graphics Engine
  Intel® HD Graphics Gen 7 engine with 4 execution units, supporting DX11.1, OpenGL 4.2 and OpenCL1.2
- Display Output
  Dual independent display
  1 x VGA (up to 2560x1600@60 Hz)
  1 x DVI-D (up to 1920x1080@60 Hz)
  1 x iDP interface for HDMI, LVDS, VGA, DVI, DP (up to 2560x1600@60 Hz)
- Ethernet
  LAN1: Realtek RTL8111HN PCIe GbE controller
  LAN2: Realtek RTL8111HN PCIe GbE controller
- External I/O Interface
  2 x RS-232
  2 x USB 2.0
  2 x USB 3.2 Gen 1 (5Gb/s)
- Internal I/O Interface
  1 x KB/MS (1x6 pin)
  1 x mSATA (colay SATA2)
  2 x SATA 3Gb/s
  4 x USB 2.0 (2x4 pin, P=2.0)
  1 x MicroSD card slot (E38xx sku only)
  1 x RS-422/485 (1x4 pin, P=2.0)
  3 x RS-232 (2x5 pin, P=2.0)
- SMBus: 1 x SMBus (1x4 pin)
- TPM: 1 x TPM (2x10 pin)
- Audio
  Realtek ALC888S HD Audio codec supports 7.1-channel
  3 x Audio jacks (line-out, line-in, mic-in) on rear IO
  1 x Front audio (2x5 pin)
  1 x S/PDIF (1x5 pin)
- Front Panel
  1 x Front panel (2x7 pin, power LED, HDD LED, speaker, power button, reset button)
- LAN LED: 2 x LAN LED (1x2 pin)
- Expansion
  1 x PCIe x4 slot (with PCIe x1 signal)
  1 x Full-size PCIe Mini card slot
- Digital I/O: 8-bit digital I/O (2x5 pin)
- Chassis Intrusion Detection: 1 x Chassis intrusion connector (1x2 pin)
- Fan Connector
  1 x CPU smart fan (1x4 pin)
  1 x System smart fan (1x4 pin)
- Power Supply
  12V DC input
  1 x External DC jack (4-pin DIN)
  1 x Internal power connector (2x2 pin)
- Power Consumption
  12V@1.64A (Intel® Celeron® J1900 CPU with 4 GB 1333 MHz DDR3L memory)
- Watchdog Timer: Software programmable supports 1~255 sec. system reset
- Operating Temperature: -20°C ~ 60°C
- Storage Temperature: -30°C ~ 70°C
- Operating Humidity: 5% ~ 95%, non-condensing
- Dimensions: 170mm x 170mm
- Weight: GW: 900g / NW: 400g
- CE/FCC compliant

Features

- Mini-ITX SBC with 22nm Intel® Atom™ on-board SoC
- 1.35V DDR3L 1066/1333 MHz SDRAM supporting up to 8 GB of memory
- Dual independent display support
- COM, USB 3.2 Gen 1 (5Gb/s), SATA 6Gb/s, PCIe Mini, mSATA and HD Audio support
- Support Intel® VT-x techology

Packing List

1 x KINO-DBT single board computer	1 x SATA cable with power output cable
1 x IO shielding	1 x QIG

Ordering Information

Part No.	Description
KINO-DBT-J19001-R10	Mini-ITX SBC supports Intel® Celeron® quad-core processor J1900 (10W), VGA/DVI/iDP, Dual PCIe GbE, USB 3.2 Gen 1 (5Gb/s), SATA, HD Audio and RoHS
KINO-DBT-N29301-R10	Mini-ITX SBC supports Intel® Celeron® quad-core processor N2930 (7.5W), VGA/DVI/iDP, Dual PCIe GbE, USB 3.2 Gen 1 (5Gb/s), SATA, HD Audio and RoHS
KINO-DBT-N28071-R10	Mini-ITX SBC supports Intel® Celeron® dual-core processor N2807 (4.5W), VGA/DVI/iDP, Dual PCIe GbE, USB 3.2 Gen 1 (5Gb/s), SATA, HD Audio and RoHS
KINO-DBT-E38XX1-R10**	Mini-ITX SBC supports Intel® Atom™ processor E38XX, VGA/DVI/iDP, Dual PCIe GbE, USB 3.2 Gen 1 (5Gb/s), SATA, HD Audio and RoHS
19800-000075-RS	PS/2 KB/MS cable with bracket, 220mm, P=2.0
32205-002700-200-RS	RS-232 cable, 200mm, P=2.0
32205-003800-300-RS	RS-422/485 cable, 200mm, P=2.0
DP-DP-R10	DisplayPort to DisplayPort converter board (for IEI iDP connector)
DP-DVI-R10	DisplayPort to DVI-D converter board (for IEI iDP connector)
DP-HDMI-R10	DisplayPort to HDMI converter board (for IEI iDP connector)
DP-LVDS-R10	DisplayPort to 24-bit dual-channel LVDS converter board (for IEI iDP connector)
DP-VGA-R10	DisplayPort to VGA converter board (for IEI iDP connector)
TPM-IN01-R20	20-pin Infineon TPM module, software management tool, firmware v3.17

**By order production, MOQ: 100

KINO-DH810

Mini-ITX SBC with LGA1150 4th generation Intel® Core™ i7/i5/i3, Pentium® or Celeron® CPU, DDR3, DVI-D, VGA, iDP, dual Intel® PCIe GbE, SATA 6Gb/s, USB 3.2 Gen 1 (5Gb/s), HD Audio and RoHS

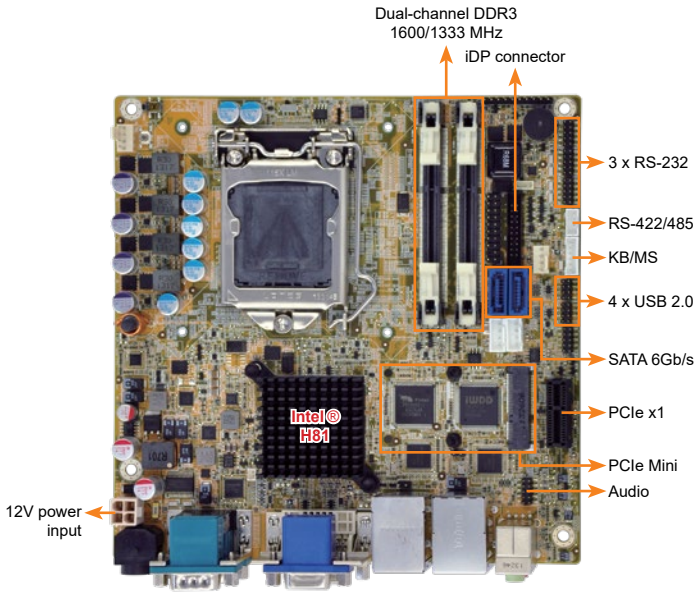

iDP (IEI Internal DisplayPort)

The iDP connector is provided on the IEI 8-series products. Through the IEI iDP converter cards, the iDP connector can support different display specifications, such as VGA, HDMI, DVI-D and LVDS.

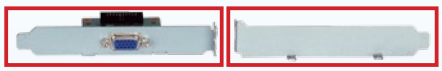



iDP converter cards with brackets

Easy Installation on the Chassis

Model	Output	External Power
DP-VGA-R10	VGA	No
DP-HDMI-R10	HDMI	No
DP-DVI-R10	DVI	No
DP-LVDS-R10	LVDS	Yes
DP-DP-R10	DP	No

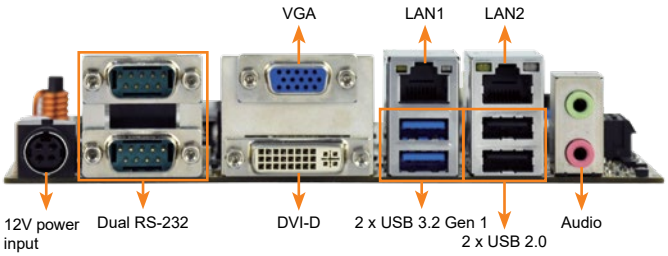



Specifications

- CPU
  4th generation LGA1150 Intel® Core™ i7/i5/i3, Pentium® or Celeron® processor supported
- Chipset
  Intel® H81
- Memory
  Two 204-pin 1600/1333 MHz dual-channel DDR3 SDRAM unbuffered SO-DIMM support up to 16 GB
- BIOS
  UEFI BIOS
- Ethernet
  Dual LAN: Intel® I211-AT PCIe controller
- Graphics Engine
  Intel® HD Graphics Gen 7.5 supports DX11.1 and OpenCL 1.2, OpenGL 3.2
  Full MPEG2, VC1, AVC Decode
- Display Output
  1 x VGA (up to 1920x1200@60Hz)
  1 x DVI-D (up to 2560x1600@60Hz)
  1 x iDP interface for HDMI, LVDS, VGA, DVI, DP (up to 3840x2160@60Hz)
- Audio
  Realtek ALC888S HD Audio codec
  2 x Audio jacks (line-out, mic-in) on rear IO
  1 x Front audio (2x5 pin)
- External I/O Interface
  2 x RS-232
  2 x USB 2.0
  2 x USB 3.2 Gen 1 (5Gb/s)
- Internal I/O Interface
  1 x KB/MS (1x6 pin)
  1 x RS-422/485 (1x4 pin, P=2.0)
  3 x RS-232 (2x5 pin, P=2.0)
  2 x SATA 6Gb/s with SATA power connector
  4 x USB 2.0 (2x4 pin, P=2.0)
- Front Panel
  1 x Front panel (1x10 pin, power LED, HDD LED, speaker, power button, reset button)
- LAN LED: 2 x LAN LED (1x2 pin)
- SMBus: 1 x SMBus (1x4 pin)
- TPM: 1 x TPM (2x10 pin)
- Expansion
  1 x PCIe x1 slot
  1 x Full-size PCIe Mini card slot (support mSATA)
- Watchdog Timer
  Software programmable, support 1~255 sec. system reset
- Digital I/O: 8-bit digital I/O (2x5 pin)
- Fan Connector
  1 x CPU smart fan (1x4 pin)
  1 x System smart fan (1x4 pin)
- Power Supply
  12V only DC input
  1 x External DC jack (4-pin DIN)
  1 x Internal power connector (2x2 pin)
  Support AT/ATX mode
- Power Consumption
  +12V@6.03A
  (Intel® Core™ i7-4770K 3.90 GHz CPU with two 1333 MHz 4 GB DDR3 memory)
- Operating Temperature: -20°C ~ 60°C
- Storage Temperature: -30°C ~ 70°C
- Operating Humidity: 5% ~ 95%, non-condensing
- Dimensions: 170mm x 170mm
- Weight: GW: 900g / NW: 450g
- CE/FCC compliant

Features

- 4th generation LGA1150 Intel® Core™ i7/i5/i3, Pentium® or Celeron® processor supported
- DDR3 1066/1333/1600 MHz dual-channel SDRAM
- 3D micro-architecture enhancement supports DX11.1, OCL 1.2 and OGL 3.2
- Rich media acceleration for hardware decode and encode acceleration
- High-speed I/O interface for USB 3.2 Gen 1 (5Gb/s), SATA 6Gb/s and mSATA
- IEI Jumper-less function

Packing List

1 x KINO-DH810 single board computer	2 x SATA with power cable kit
1 x I/O shielding	1 x QIG

Ordering Information

Part No.	Description
KINO-DH810-R10	Mini-ITX SBC with LGA1150 Intel® Core™ i7/i5/i3, Celeron® CPU, DDR3, dual Intel® PCIe GbE, DVI-D, VGA, DP, USB 3.2 Gen 1 (5Gb/s), SATA 6Gb/s, HD Audio and RoHS
KINO-DH810-ECO-R10	Mini-ITX SBC with LGA1150 Intel® Core™ i7/i5/i3, Pentium® or Celeron® CPU, DDR3, DVI-D, VGA, iDP, dual Intel® PCIe GbE, USB 3.2 Gen 1 (5Gb/s), SATA 6Gb/s, HD Audio, ECO packing and RoHS (10 pcs/pack)
32001-008600-200-RS	Dual-port USB cable, 210mm, P=2.0
32006-001100-201-RS	PS/2 KB/MS cable, 135mm, P=2.0
32205-002700-200-RS	RS-232/422/485 cable, 200mm, P=2.0
32205-003800-300-RS	RS-422/485 cable, 200mm, P=2.0
CF-115XA-R10	High-performance LGA115X cooler kit, 1U chassis compatible, 73W
CF-115XC-R10	LGA115X cooler kit, 1U chassis compatible, 45W
CF-115XD-R10	LGA115X cooler kit, 1U chassis compatible, 65W
CF-115XE-R10	High-performance LGA115X cooler kit, 95W
TPM-IN01-R20	20-pin Infineon TPM module, software management tool, firmware v3.17

eKINO-BT

Mini-ITX SBC supports AUPS sub-system, 22nm Intel® Atom™/Celeron® on-board SoC, wide-range 9V ~ 26V DC input, VGA/dual LVDS, SATA, dual GbE, USB 3.2 Gen 1 (5Gb/s), audio, CFast and RoHS

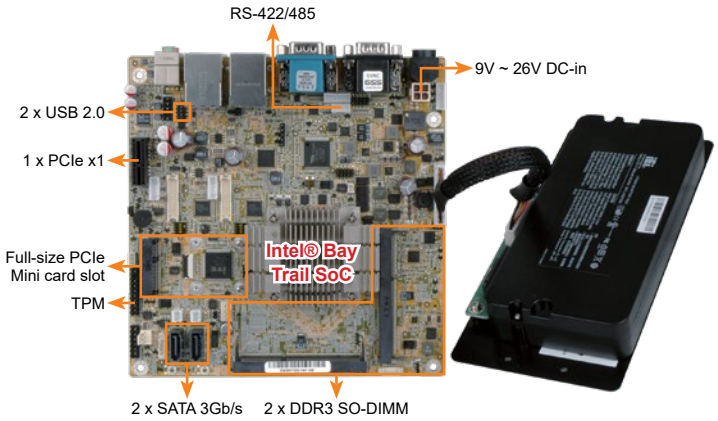

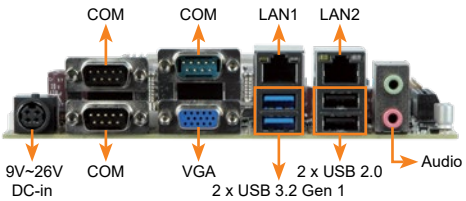

DDR3L 1333 | Fanless | Dual Display | USB 3.2 | SATA 3Gb/s | Dual GbE

Specifications

- CPU
  Intel® Atom™ E3845 on-board SoC (1.91GHz, quad-core, 2MB cache, TDP=10W)
  Intel® Atom™ E3827 on-board SoC (1.75GHz, dual-core, 1MB cache, TDP=8W)
  Intel® Atom™ E3826 on-board SoC (1.46GHz, dual-core, 1MB cache, TDP=7W)
  Intel® Atom™ E3825 on-board SoC (1.33GHz, dual-core, 1MB cache, TDP=6W)
  Intel® Atom™ E3815 on-board SoC (1.46GHz, single-core, 512KB cache, TDP=5W)
  Intel® Celeron® J1900 on-board SoC (2GHz, quad-core, 2MB cache, TDP=10W)
  Intel® Celeron® N2930 on-board SoC (1.83GHz, quad-core, 2MB cache, TDP=7.5W)
  Intel® Celeron® N2807 on-board SoC (1.58GHz, dual-core, 2MB cache, TDP=4.3W)
- BIOS
  UEFI BIOS
- Memory
  Two 204-pin 1066/1333 MHz dual-channel unbuffered DDR3L SDRAM SO-DIMM support up to 8 GB (J1900, N2930, E3845, E3827, E3826)
  One 204-pin 1066/1333 MHz dual-channel unbuffered DDR3L SDRAM SO-DIMM supports up to 8 GB (E3825, E3815) or 4 GB (N2807)
- Graphics Engine
  Intel® HD Graphics Gen 7 Engines with 4 execution units, supporting DX11.1, OpenGL 4.2 and OpenCL1.2
- Display Output
  1 x VGA (up to2560x1600@60Hz)
  2 x 18/24-bit dual-channel LVDS (up to 1920x1200@60Hz)
- External I/O Interface
  2 x USB 2.0
  2 x USB 3.2 Gen 1 (5Gb/s)
  3 x RS-232
- Internal I/O Interface
  1 x CFast slot
  1 x KB/MS (1x6 pin)
  1 x MicroSD card slot
  1 x RS-232 (2x5 pin, P=2.0)
  1 x RS-422/485 (1x4 pin, P=2.0)
  2 x SATA 3Gb/s with 5V SATA power connector
  2 x USB 2.0 (2x4 pin, P=2.0)
- Ethernet
  Dual LAN: Realtek RTL8111E PCIe controller
- TPM
  1 x TPM (2x10 pin)
- SMBus
  1 x SMBus (1x4 pin)
- Front Panel
  1 x Front panel (2x7 pin, power LED, HDD LED, speaker, power button, reset button)
- LAN LED
  2 x LAN LED (1x2 pin)
- Digital I/O
  8-bit digital I/O (2x5 pin)
- Expansion
  1 x PCIe x1 slot
  1 x Full-size PCIe Mini card slot
- Audio
  Realtek ALC888S HD Audio codec
  2 x Audio jacks (line-out, mic-in) on rear IO
  1 x Front audio (2x5 pin)
- Watchdog Timer
  Software programmable supports 1~255 sec. system reset
- Power Supply
  1 x External DC power jack (4-pin DIN)
  1 x Internal power connector (2x2 pin)
  Input voltage range: 9V ~ 26V
  Recommended operating input voltage range: 12V~24V
- Fan Connector
  1 x CPU smart fan (1x4 pin)
  1 x System fan (1x3 pin)
- Power Consumption
  +12V@1.55A
  (Intel® Celeron® J1900 CPU with two 4 GB 1333 MHz DDR3L memory)
- Operating Temperature
  0°C ~ 40°C with AUPS sub-system
  -20°C ~ 60°C without AUPS sub-system
- Storage Temperature
  -10°C ~ 50°C with AUPS sub-system
  -30°C ~ 70°C without AUPS sub-system
- Operating Humidity
  5% ~ 95%, non-condensing
- Weight
  GW: 1100g / NW: 400g
- CE/FCC compliant

AUPS Battery Kit

- BATKIT-2S2P3800-R10
- BATKIT-4S2P3800-R10



P/N: BAT-LI-2S2P3800
2S2P 7.4V 3800mAh

P/N: BAT-LI-4S2P3800
4S2P 14.8V 3800mAh

Battery Specifications

Battery Model	BAT-LI-2S2P3800	BAT-LI-4S2P3800
Battery type	Li-Ion 2S2P 7.4V	Li-Ion 4S2P 14.8V
Battery capacity	7.4V 3800mAh	14.8V, 3800mAh
Maximum charge voltage	8.4V	16.8V
The end of discharging voltage	5.6V	11.2V
Battery charge time (Power off)	2.5hrs	5hrs
Battery charge time (Power on)	6.5hrs	13hrs
Operating temp.	0°C ~ 40°C	0°C ~ 40°C
Storage temp.	-20°C ~ 60°C	-20°C ~ 60°C
Cycle life	300 charge/discharge cycles	
Backup	60W/10Min	100W/10Min
Safety class	CE	

Features

- Mini ITX supports Intel® 22nm Atom™ or Celeron® on-board SoC
- Wide-range 9V ~ 26V DC input design
- Supports dual independent display with dual LVDS and VGA
- Equipped with AUPS sub-system, acts as a simple UPS system
- Supports four USB 2.0, two USB 3.2 Gen 1 (5Gb/s), two SATA and four COM
- IEI jumper-less function

Packing List

- 1 x eKINO-BT single board computer
- 2 x SATA with 5V output cable kit
- 1 x I/O shielding
- 1 x QIG

Ordering Information

Part No.	Description
EKINO-BT-J19001-R10	Mini-ITX SBC supports AUPS sub-system, Intel® Celeron® quad-core processor J1900 (10W), wide-range 9V ~ 26V DC input, VGA/dual LVDS, SATA, USB 3.2 Gen 1 (5Gb/s), dual GbE, audio, CFAST and RoHS
EKINO-BT-N29301-R10	Mini-ITX SBC supports AUPS sub-system, Intel® Celeron® quad-core processor N2930 (7.5W), wide-range 9V ~ 26V DC input, VGA/dual LVDS, SATA, USB 3.2 Gen 1 (5Gb/s), dual GbE, audio, CFast and RoHS
EKINO-BT-N28071-R10	Mini-ITX SBC supports AUPS sub-system, Intel® Celeron® dual-core processor N2807 (4.3W), wide-range 9V ~ 26V DC input, VGA/dual LVDS, SATA, USB 3.2 Gen 1 (5Gb/s), dual GbE, audio, CFast and RoHS
EKINO-BT-E38XX1-R10**	Mini-ITX SBC supports AUPS sub-system, Intel® Atom™ E38XX on-board SoC, wide-range 9V ~ 26V DC input, VGA/dual LVDS, SATA, dual GbE, USB 3.2 Gen 1 (5Gb/s), audio, CFast and RoHS (by request MOQ: 100pcs/lot)
BATKIT-2S2P3800-R10	2S2P 7.4V 3800mAh AUPS battery kit
BAT-LI-2S2P3800	2S2P 7.4V 3800mAh smart battery
BATKIT-4S2P3800-R10	4S2P 14.8V 3800mAh AUPS battery kit
BAT-LI-4S2P3800	4S2P 14.8V 3800mAh smart battery
19800-000075-RS	PS/2 KB/MS cable with bracket, 220mm, P=2.0
32001-008600-200-RS	Dual-port USB 2.0 cable, 210mm, P=2.0
32205-003800-300-RS	RS-422/485 cable, 200mm, P=2.0
63040-010060-110-RS	60W/12V power adaptor, 90VAC~260VAC, 4-pin DIN
63040-010120-210-RS	120W/19V power adapter, 90VAC~264VAC, 4-pin DIN
CB-USB02A-RS	Dual-port USB 2.0 cable with bracket, 300mm, P=2.0

**By order production, MOQ: 100

KINO-DQM871-i1

Mini-ITX SBC supports 4th generation 22nm Intel® mobile processors, HDMI/ VGA/LVDS/DP, dual Intel® PCIe GbE, USB 3.2 Gen 1 (5Gb/s), SATA 6Gb/s, iRIS-1010, audio and RoHS

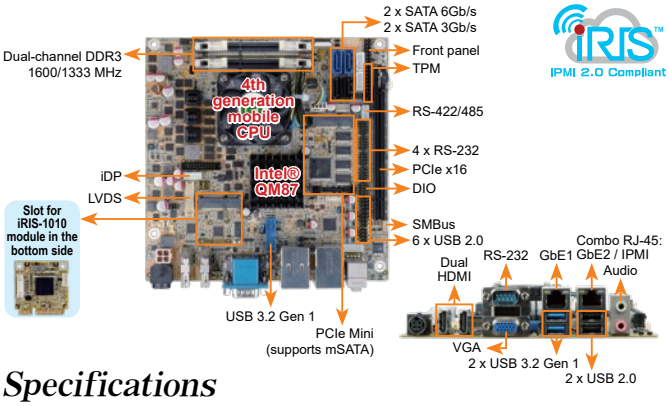

Specifications

- CPU
  Intel® mobile Core™ i7-4700EQ on-board processor with Intel® AMT 9.0 support (2.4GHz, quad-core, 6MB cache, TDP=47W)
  Intel® mobile Core™ i5-4402E on-board processor with Intel® AMT 9.0 support (1.6GHz, dual-core, 3MB cache, TDP=25W)
  Intel® mobile Core™ i5-4400E on-board processor with Intel® AMT 9.0 support (2.7GHz, dual-core, 3MB cache, TDP=37W) (by request)
- Chipset: Intel® QM87
- Memory: Two 204-pin 1600/1333 MHz dual-channel DDR3 SDRAM unbuffered DIMMs support up to 16 GB
- BIOS: UEFI BIOS
- Ethernet
  LAN1: Intel® I217LM with Intel® AMT 9.0 support
  LAN2: Intel® I210-AT PCIe controller
- Graphics Engine
  Intel® HD Graphics Gen 7.5 supports DX11.1 and OpenCL 1.2, OpenGL 3.2
  Full MPEG2, VC1, AVC Decode
- Audio
  Realtek ALC888S HD Audio codec supports 7.1-channel
  2 x Audio jacks (line-out, mic-in) on rear IO
- iRIS Remote Management Module
  1 x iRIS-1010 slot
- LAN LED: 2 x LAN LED (1x2 pin)
- Display Output
  1 x VGA (up to 1920x1200@60Hz)
  1 x 18/24-bit dual-channel LVDS (up to 1920x1200@60Hz)
  2 x HDMI (up to 2500x1600@60Hz)
  1 x iDP interface for HDMI, LVDS, VGA, DVI, DP (up to 3840x2160@60Hz)
- External I/O Interface
  1 x RS-232 2 x USB 2.0
  2 x USB 3.2 Gen 1 (5Gb/s)
- Internal I/O Interface
  1 x KB/MS (1x6 pin)
  1 x RS-422/485 (1x4 pin, P=2.0)
  2 x SATA 3Gb/s
  2 x SATA 6Gb/s (RAID 0/1/5/10 supported)
  2 x USB 3.2 Gen 1 (5Gb/s) (2x10 pin, P=2.0)
  4 x RS-232 (2x5 pin, P=2.0)
  6 x USB 2.0 (2x4 pin, P=2.54)
- Front Panel: 1 x Front panel (2x7 pin, power LED, HDD LED, speaker, power button, reset button)
- SMBus: 1 x SMBus (1x4 pin)
- TPM: 1 x TPM (2x10 pin)
- Expansion: 1 x PCIe x16 slot
  1 x Full-size PCIe Mini card slot (support mSATA)
- Watchdog Timer: Software programmable, support 1~255 sec. system reset
- Digital I/O: 8-bit digital I/O (2x5 pin)
- Fan Connector: 1 x CPU smart fan (1x4 pin)
  1 x System smart fan (1x4 pin)
- Power Supply: 12V DC input
  1 x Internal power connector (2x2 pin)
  1 x External DC jack (4-pin DIN)
  Support AT/ATX mode
- Power Consumption: 12V@6.03A (Intel® Core™ i7-4770EQ, 2.4GHz CPU with 8 GB (two 4 GB) 1333 MHz DDR3 memory)
- Operating Temperature: -20°C ~ 60°C
- Operating Humidity: 5% ~ 95%, non-condensing
- Dimensions: 170mm x 170mm
- Weight: GW: 900g / NW: 450g
- CE/FCC compliant

Packing List

1 x KINO-DQM871-i1 motherboard	2 x SATA with power output cable
1 x CPU cooler	1 x Mini jumper pack
1 x I/O shielding	1 x QIG

Ordering Information

Part No.	Description
KINO-DQM871-i1-i5E-R10	Mini-ITX SBC supports Intel® 22nm mobile Core™ i5-4402E on-board processor, HDMI / VGA / LVDS / DP, dual Intel® PCIe GbE, AMT 9.0, USB 3.2 Gen 1 (5Gb/s), SATA 6Gb/s, iRIS-1010, audio and RoHS
iRIS-1010-R10	IPMI 2.0 adapter card with AST1010 BMC chip (W/O KVM over IP function) for PCIe Mini socket interface
19800-000300-100-RS	RS-232 cable with bracket, 300mm, P=2.0
19800-003100-100-RS	Dual port USB 2.0 cable with bracket, 300mm, P=2.54
19800-010500-200-RS	USB 3.2 Gen 1 (5Gb/s) cable with bracket, 450mm
32006-001100-201-RS	PS/2 KB/MS cable, 135mm/110mm, P=2.0
32205-003800-200-RS	RS-422/485 cable, 200mm, P=2.0
DP-DP-R10	DisplayPort converter board (for IEI iDP connector)
DP-DVI-R10	DisplayPort to DVI-D converter board (for IEI iDP connector)
DP-HDMI-R10	DisplayPort to HDMI converter board (for IEI iDP connector)
DP-LVDS-R10	DisplayPort to 24-bit dual-channel LVDS converter board (for IEI iDP connector)
DP-VGA-R10	DisplayPort to VGA converter board (for IEI iDP connector)
TPM-IN01-R20	20-pin Infineon TPM module, software management tool, firmware v3.17

KINO-QM770

Mini-ITX SBC with Socket G2 for Intel® 22nm mobile CPU, DVI-I, dual HDMI, LVDS, dual PCIe GbE, USB 3.2 Gen 1 (5Gb/s), PCIe Mini, SATA 6Gb/s and audio

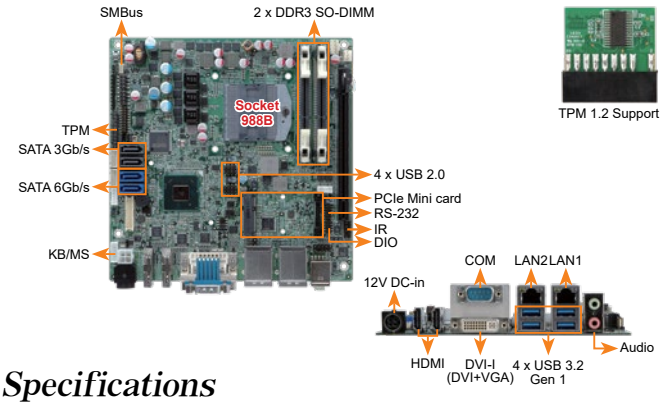

Specifications

- CPU: Socket G2 for 3rd generation Intel® 22nm mobile processor
- Chipset: Intel® QM77
- Memory: Two 240-pin 1600/1333 MHz dual-channel DDR3 SDRAM unbuffered DIMMs support up to 16 GB
- BIOS: UEFI BIOS
- Ethernet
  LAN1:Intel® 82579 PHY with Intel® AMT 8.0 support
  LAN2:Intel® 82583V PCIe controller
- Graphics Engine
  Supports DX11 and OpenGL 3.1
  Full MPEG2, VC1, AVC Decode
- Display Output
  1 x DVI-I (up to 1920x1200@60Hz)
  1 x 18/24-bit dual-channel LVDS (up to 1920x1200@60Hz)
  2 x HDMI (up to 1920x1200@60Hz)
- Audio
  Realtek ALC888S HD Audio codec
  2 x Audio jacks (line-out, mic-in) on rear IO
  1 x Front Audio (2x5 pin)
- SMBus: 1 x SMBus (1x4 pin)
- TPM: 1 x TPM (2x10 pin)
- Expansion
  1 x PCIe x16 slot 1 x PCIe Mini card slot
- Digital I/O: 8-bit digital I/O (2x5 pin)
- External I/O Interface
  1 x RS-232 4 x USB 3.2 Gen 1 (5Gb/s)
- Internal I/O Interface
  1 x KB/MS (1x6 pin)
  2 x SATA 3Gb/s
  1 x RS-232 (2x5 pin, P=2.0)
  2 x SATA 6Gb/s (RAID 0/1/5/10 supported)
  1 x RS-422/485 (1x4 pin, P=2.0)
  4 x USB 2.0 (2x4 pin, P=2.54)
- Watchdog Timer: Software programmable supports 1~255 sec. system reset
- Infrared Interface: 1 x Infrared interface (1x5 pin)
- Fan Connector
  1 x CPU smart fan (1x4 pin)
  1 x System fan (1x3 pin)
- Power Supply
  12V DC input
  1 x Internal power connector (2x2 pin)
  1 x External DC jack (4-pin DIN)
  Support AT/ATX mode
- Power Consumption
  12V@6.08A (2.3GHz Intel® Core™ i7-3610QE with two 1333 MHz 4 GB DDR3 memory running 3DMark06 burn in)
- Operating Temperature: -10°C ~ 60°C
- Storage Temperature: -20°C ~ 70°C
- Operating Humidity: 5% ~ 95%, non-condensing
- Dimensions: 170 mm x 170 mm
- Weight: GW: 900g / NW: 450g
- CE/FCC compliant

Dimensions *(Unit: mm)*

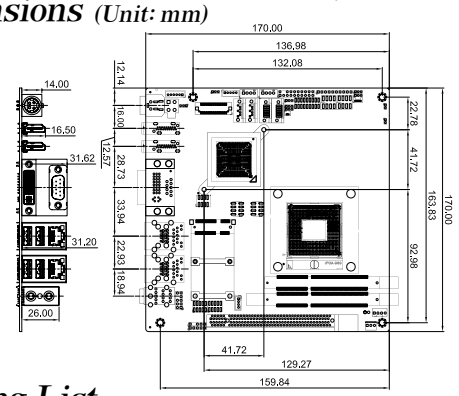

Packing List

1 x KINO-QM770 single board computer	2 x SATA with power output cable
1 x I/O shielding	1 x Mini jumper pack
1 x RS-232 cable with bracket	1 x QIG

Ordering Information

Part No.	Description
KINO-QM770-R10	Mini-ITX SBC with Socket G2 for Intel® 22nm mobile CPU, DVI-I/dual HDMI/LVDS, dual PCIe GbE, USB 3.2 Gen 1 (5Gb/s), PCIe Mini, SATA 6Gb/s and Audio
19800-003100-100-RS	Dual port USB 2.0 cable with bracket, 300mm, P=2.54
32006-001100-201-RS	PS/2 KB/MS cable, 135mm/110mm, P=2.0
32205-003800-300-RS	RS-422/485 cable, 200mm, P=2.0
33Z00-000031-RS	DVI-I to VGA adapter connector
CF-989A-RS-R12	CPU cooler for mobile socket-G (PGA988) up to 55W processor, copper, 60 x 60 x 27.6mm, RoHS
SACF-KIT01-R10	SATA to CF converter board
TPM-IN01-R20	20-pin Infineon TPM module, software management tool, firmware v3.17

Mini-ITX Dimensions (Unit: mm)

KINO-DH110

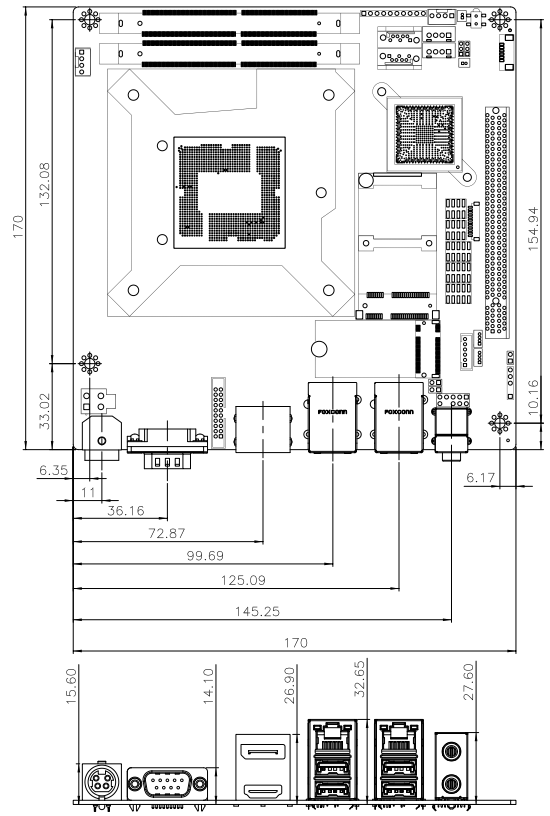

tKINO-AL

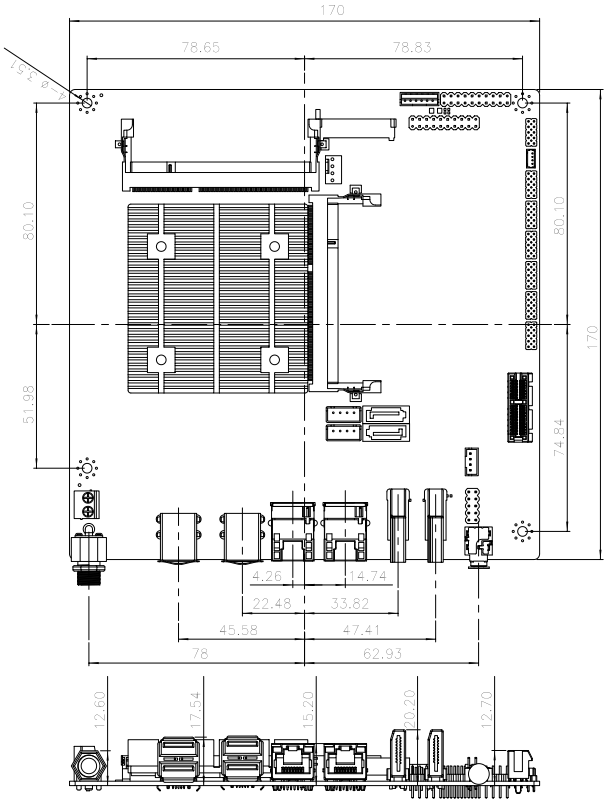

KINO-DAL

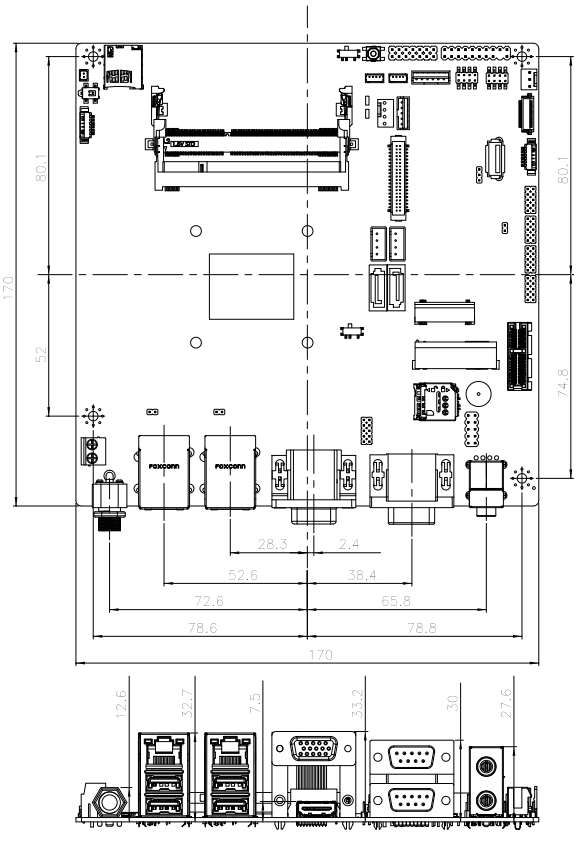

tKINO-ULT3

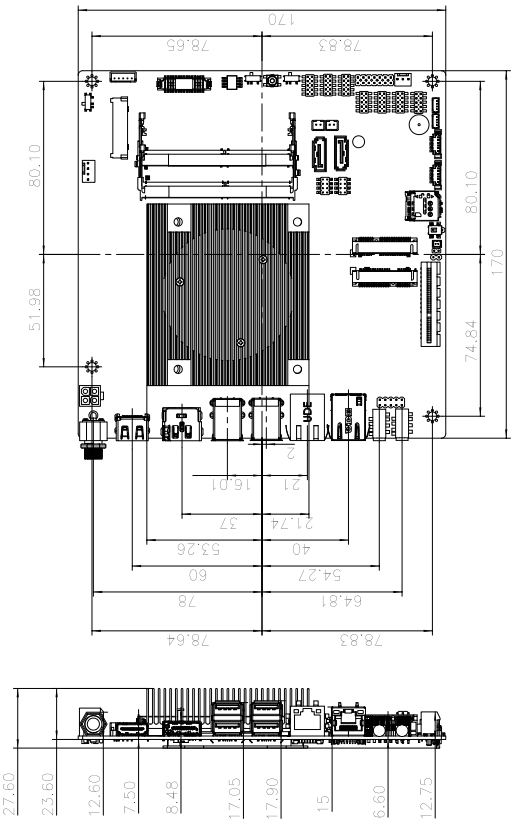

Mini-ITX Dimensions (Unit: mm)

KINO-DCM236

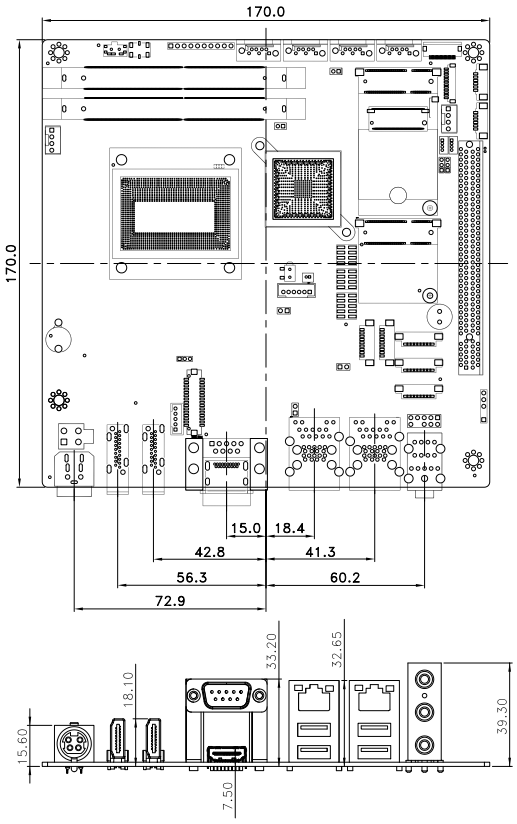

KINO-AQ170

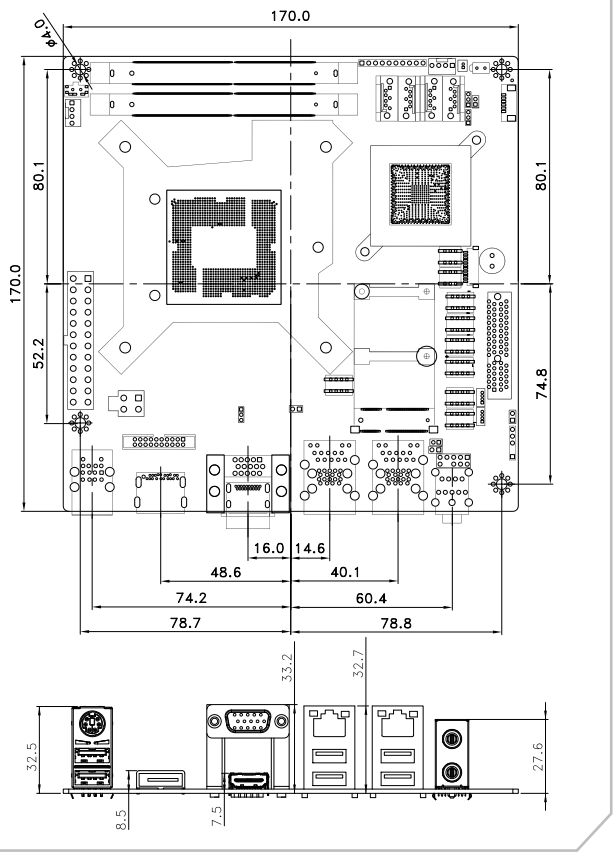

KINO-DQM170

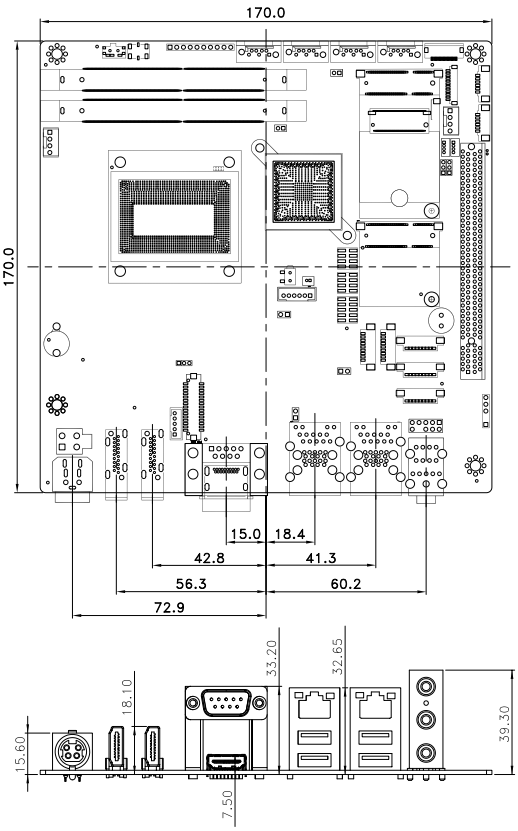

tKINO-BW

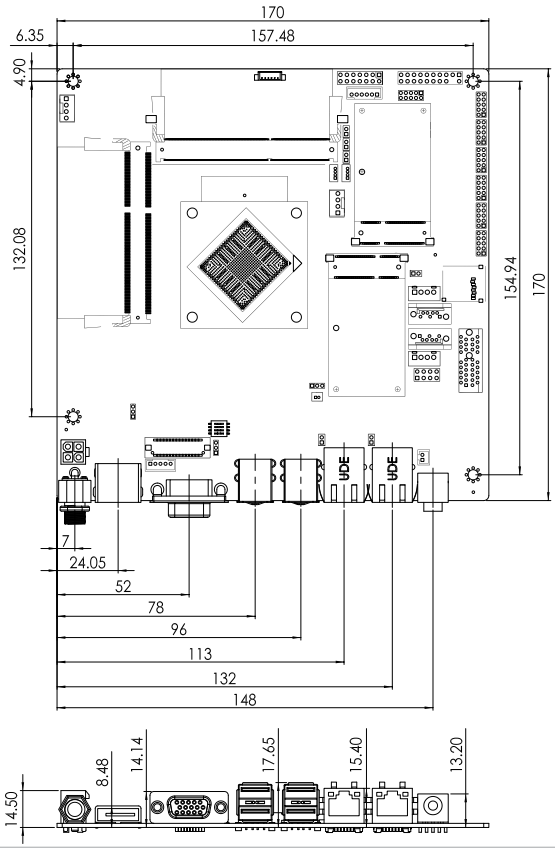

Mini-ITX Dimensions (Unit: mm)

KINO-DBT

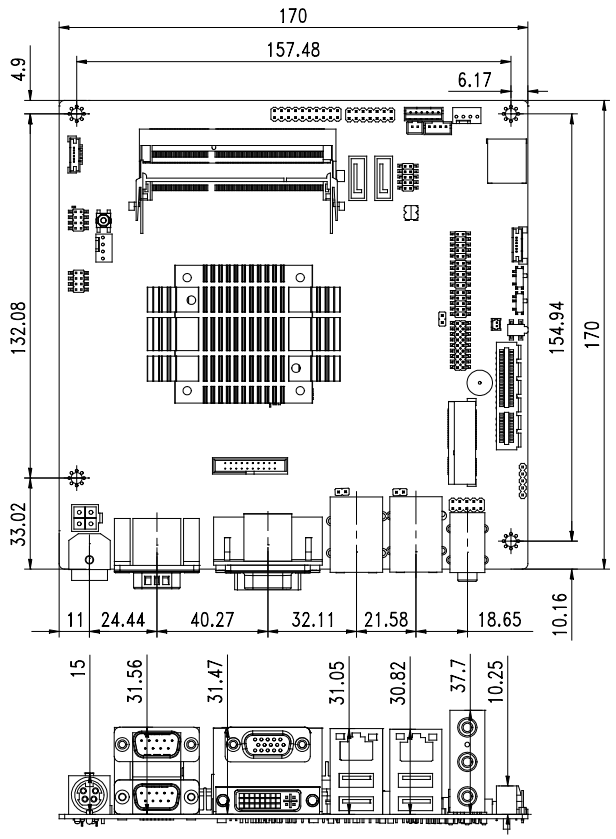

eKINO-BT

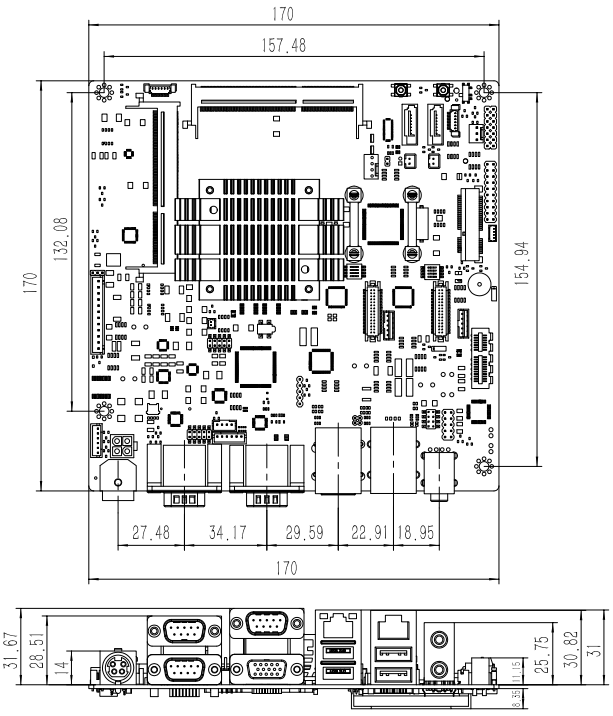

KINO-DH810

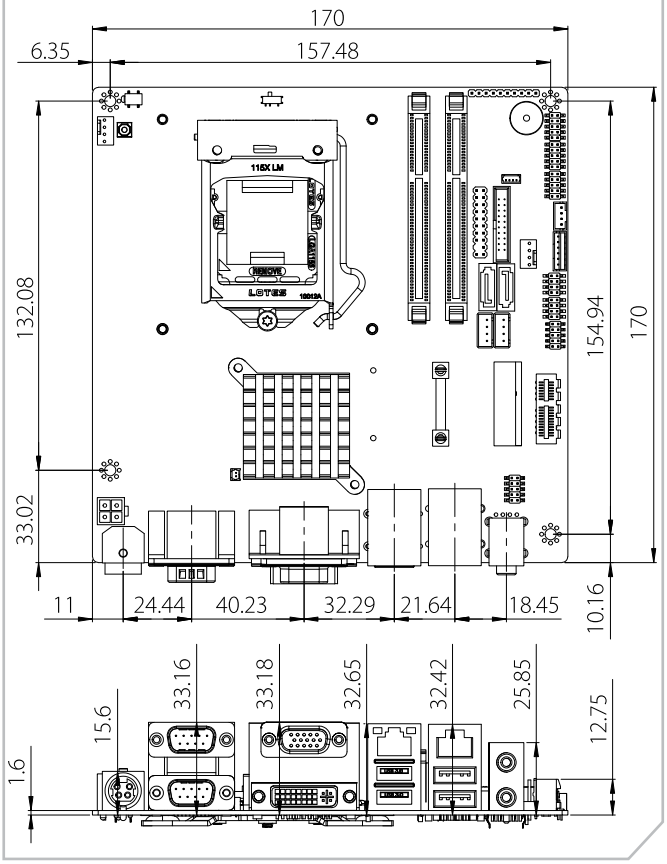

KINO-DQM871-i1

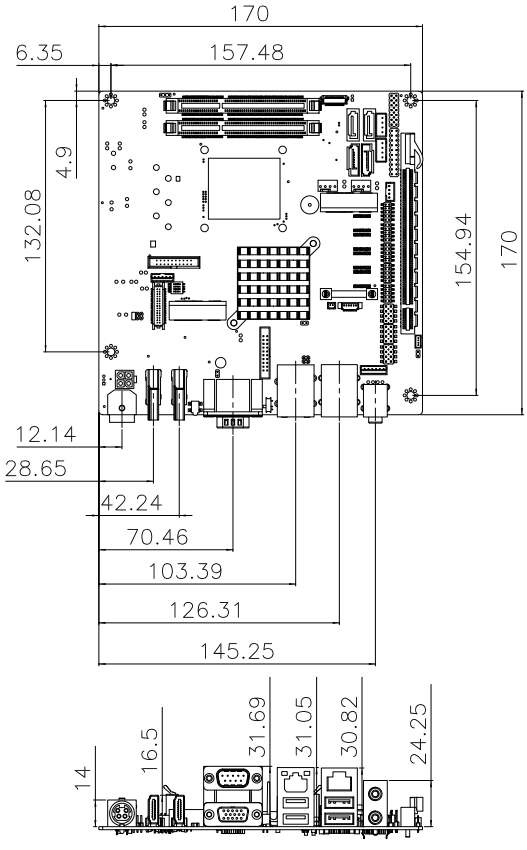

EPIC NANO Selection Guide

New








Model Name	NANO-ULT5	NANO-AL	NANO-ULT3	NANO-BT-i1/BTW2	NANO-QM871-i1	NANO-LX-R12
CPU Socket	On Board	On board	On board	On board	On board	On board
CPU Type	Intel® Core™ i7/i5/i3, Celeron® ULT processor	Intel® Atom™/Celeron®/ Pentium® on-board SoC	Intel® Core™ i7/i5/i3, Celeron® ULT processor	Intel® Atom™, Celeron® SoC	Intel® Core™ i7/i5/ i3, Celeron® Mobile processor	AMD Geode™ LX800
Chipset	Intel® Core™ i7/i5/i3, Celeron® ULT processor	Intel® Atom™/Celeron®/ Pentium® on-board SoC	Intel® Core™ i7/i5/i3, Celeron® ULT processor	Intel® Atom™/Celeron® on-board SoC	Intel® QM87	AMD Geode™ LX800 + AMD CS5536
Memory	2 x 260-pin 2400/2133 MHz Dual-channel DDR3L/DDR4, SO-DIMM (system max. 32 GB)	1 x 204-pin 1866/1600 MHz single-channel DDR3L SO-DIMM (system max. 8 GB)	2 x 260-pin 2133/1867 MHz dual-channel DDR4 SO-DIMMs (system max. 32 GB)	1 x 204-pin 1333/1066 MHz single-channel DDR3L SO-DIMM (system max. 8 GB)	1 x 204-pin 1600/1333 MHz dual-channel DDR3/ DDR3L SO-DIMM (system max. 8 GB)	1 x 200-pin 400/333 MHz DDR SO-DIMM (system max. 1GB)
Display Interface	Triple independent displays 1 x HDMI 1 x DP 1 x Internal LVDS	Triple independent display 2 x HDMI 1 x 18/24-bit dual-channel LVDS 1 x iDP	Triple independent display 2 x HDMI 1 x 18/24-bit dual-channel LVDS 1 x iDP interface	Dual display supported 1 x VGA 1 x HDMI 1 x 18/24-bit dual-channel LVDS	Dual display supported 1 x VGA 2 x HDMI 1 x 18/24-bit dual-channel LVDS	Dual display supported 1 x VGA 1 x 18-bit single-channel LVDS 1 x 24-bit TTL (LVDS to TTL)
Ethernet	1 x PCIe GbE LAN Intel® i211 controller 1 x PCIe GbE LAN Intel® i219 controller	Dual LAN: Intel® I210-IT/ I211-AT PCIe controller	LAN1: Intel® I219-LM PHY with Intel® AMT 11.0 supported LAN2: Intel® I211-AT PCIe GbE Controller	LAN1: Intel® I210-AT PCIe controller with NCSI support LAN2: Intel® I211-AT PCIe controller	LAN1: Intel® I217-LM PHY with Intel® AMT 9.0 supported LAN2: Intel® I211-AT PCIe GbE controller	10/100Mbps Realtek RTL8100C
iRIS Remote Management Module	N/A			1 x iRIS-1010 slot	1 x iRIS-1010 slot	N/A
I/O Interface	1 x TPM (2x10 pin SPI interface) 1 x RS-422/485 (Support Auto Flow Control over RS-485) 2 x RS-232 2 x SATA 6G/s with 5V SATA power connector 2 x USB 2.0 4 x USB 3.2 Gen 2	1 x PS/2 KB/MS 2 x RS-232/422/485 2 x USB 2.0 4 x RS-232 4 x USB 3.2 Gen 1	1 x PS/2 KB/MS 1 x RS-232/422/485 2 x RS-232 2 x USB 2.0 4 x USB 3.2 Gen 1	1 x PS/2 KB/MS 1 x RS-422/485 1 x USB 3.2 Gen 1 3 x RS-232 3 x USB 2.0	1 x PS/2 KB/MS 1 x RS-422/485 2 x RS-232 2 x USB 3.2 Gen 1 4 x USB 2.0	1 x Infrared interface 1 x LPT 1 x PS/2 for KB/MS 1 x RS-422/485 4 x USB 2.0 6 x RS-232
Storage Interface	2 x SATA 6Gb/s with 5V SATA power connector 1 x M.2 (M Key with SATA/PCIe interface) (Celeron with M.2 M Key PCIe only)	2 x SATA 6Gb/s with 5V SATA power connector 1 x M.2 (B Key) (SATA only)	2 x SATA 6Gb/s with 5V SATA power connector 1 x 8 GB eMMC (optional)	2 x SATA 3Gb/s with 5V SATA power connector	2 x SATA 6Gb/s with 5V SATA power connector (RAID 0, 1)	2 x SATA 1.5Gb/s (RAID 0,1) 1 x IDE 1 x CF Type II
Audio	Realtek ALC888S HD Audio codec 1 x Analog audio	Realtek ALC888S HD Audio codec				Realtek ALC203 with AC'97 codec
Digital I/O	8-bit programmable digital I/O					
Power Consumption	TBD	12V@2.13 A (Intel® Pentium® N4200 CPU with one 8GB 1600MHz DDR3L memory)	12V@2.48A (Intel® Core™ i3-6100U CPU)	12V@1.52A (Intel® Atom™ Processor J1900 CPU with one 8 GB 1333 MHz DDR3L memory)	12V@3.78A (Intel® 4th Gen. 2.0GHz CPU with one 1333HMz DDR3 4 GB memory)	12V@0.92A (AMD LX800, 256 MB 400 MHz DDR)
Watchdog Timer	Software programmable and supports 1~255 sec. system reset					
Operating Environment	Temperature Range: -20°C ~ 60°C (-4°F ~ 140°F) Relative Humidity: 5% ~ 95%, non-condensing	Temperature Range: NANO-AL: -20°C ~ 70°C (-4°F~158°F) NANO-ALW2: -40°C ~ 85°C (-40°F~185°F) Relative Humidity: 5% ~ 95% non-condensing	Temperature Range: -20°C ~ 60°C (-4°F ~ 140°F) Relative Humidity: 5% ~ 95%, non-condensing	Temperature Range: NANO-BT-i1: -20°C ~ 60°C (-4°F ~ 140°F) NANO-BTW2: -40°C ~ 85°C (-40°F ~ 185°F) Relative Humidity: 5% ~ 95% non-condensing	Temperature Range: -10°C ~ 60°C (14°F ~ 140°F) Relative Humidity: 5% ~ 95% non-condensing	Temperature Range: 0°C ~ 60°C (32°F ~ 140°F) Relative Humidity: 5% ~ 95% non-condensing
Expansion Slots	1 x Full-size PCIe Mini slot 1 x M.2 slot with 2230 A key 1 x M.2 slot with 2280 M key 1 x SIM card	1 x Full/Half-size PCIe Mini slot (w/ Micro SIM holder)	1 x Full-size PCIe Mini card slot (with SIM holder & mSATA support) 1 x Half-size PCIe Mini card slot	1 x Full-size PCIe Mini card slot with mSATA support 1 x PCI-104 slot	1 x Full-size PCIe Mini card slot	1 x PC/104-Plus
CPU Cooler	Heat Spreader	Heatsink	Heat Spreader	Heatsink	XCF-479B-RS / CF-989B-RS-R11	Heatsink

NANO-ULT5

EPIC SBC supports Intel® 14nm 8th Generation Mobile Core™ i3/i5/i7 and Celeron® on-board processor (ULT) with HDMI, DP LVDS, mPCIE, M.2 A key M key, USB 3.2 Gen 2, SATA 6Gb/s, COM, Audio and RoHS, -20°C ~ 60°C

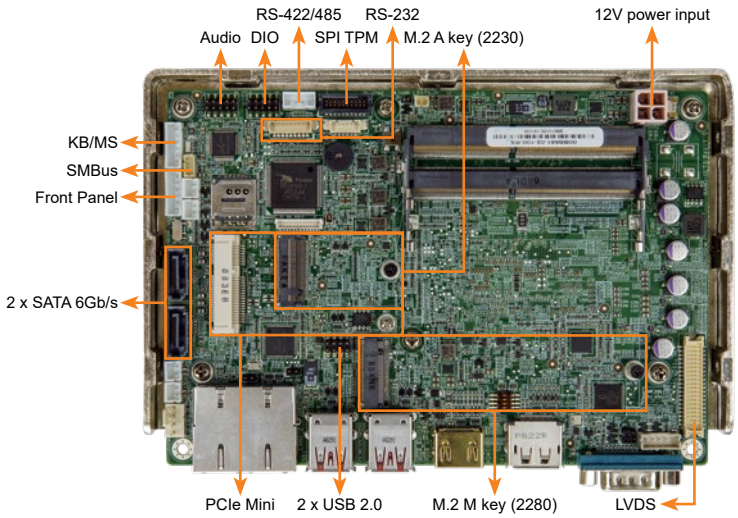

Multiple Expansion for Diverse Applications

New





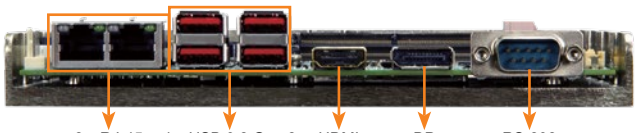



Specifications

- SoC
  Intel® Celeron® processor 4305UE (2.0 GHz Dual Core, 2MB cache, TDP=15W)
  Intel® Core™ i3-8145UE (2.2 GHz Dual Core, 4MB cache, TDP=15W)
  Intel® Core™ i5-8365UE (1.6 GHz, Quad Core, 6MB cache, TDP=15W)
  Intel® Core™ i7-8665UE (1.7 GHz Quad Core, 8MB cache, TDP=15W)
- BIOS:
  AMI UEFI BIOS
- Memory
  Dual 260-pin 2400MHz Dual-channel DDR4 SO-DIMMs support up to 32GB
- Graphics Engine
  Intel® HD Graphics Gen9 Low Power; 16 Execution Units
  4K Codec Decode
- Display Output
  Triple Independent Displays
  1 x HDMI up to 3840x2160@60Hz
  1 x DP up to 3840x2160@60Hz
  1 x Internal LVDS up to 1920x1200@60Hz
- Ethernet
  1 x PCIe GbE LAN Intel® i211 controller
  1 x PCIe GbE LAN Intel® i219 controller
- Embedded Controller
  iWDD IT8587VG
- External I/O Interface
  4 x USB 3.2 Gen 2
  1 x RS-232
- Internal I/O Interface
  1 x 32 GB eMMC 5.1 (optional) 2 x SATA 6G/s with 5V SATA power connector
  1 x TPM (2x10 pin, p=0.5) 2 x USB 2.0 (2x4 pin, P=2.0)
  1 x RS-422/485 (1x4 pin, P=2.0) (Support Auto Flow Control over RS-485)
  1 x RS-232 (1x9 pin, P=1.25)
- SMBus/I²C
  1 x 4-pin connector (1x4)
- Audio
  Realtek ALC888S HD Audio codec
  1 x Analog audio (2x5 pin)
- Front Panel
  1 x Power LED & HDD LED (1x6 pin)
  1 x Power button (1x2 pin)
  1 x Reset button (1x2 pin)
- LAN LED
  2 x LAN LED (1x2 pin)
- Expansion
  1 x M.2 slot with 2230 A key 1 x Full-size PCIe Mini slot
  1 x M.2 slot with 2280 M key 1 x SIM card
- Digital I/O
  1 x 8-bit digital I/O (2x5 pin)
- Fan Connector
  1 x Smart fan connector (1x4 pin)
- Power Supply
  12V DC input
  1 x Internal power connector (2x2 pin)
  Support AT/ATX mode
- Watchdog Timer: Software programmable support 1~255 sec. system reset
- Power Consumption: TBD
- Operating Temperature: -20°C ~ 60°C
- Storage Temperature: -30°C ~ 70°C
- Operating Humidity: 5% ~ 95%, non-condensing
- Dimensions: 115mm x 165mm
- Weight: GW:850g / NW:350g

Features

- EPIC SBC supports Intel® 8th Generation ULT processor or Celeron® on-board SoC supports dual-channel DDR4 SO-DIMMs
- Triple independent display support
- 12V DC input design
- M.2 slot with A key, M.2 M Key PCIe Mini slot with SIM holder
- COM, USB 3.2 Gen 2, SATA 6Gb/s, eMMC 5.1 and audio support
- Support temperature operation: -20°C ~ 60°C
- Support Auto Flow Control over RS-485

Dimensions (Unit: mm)

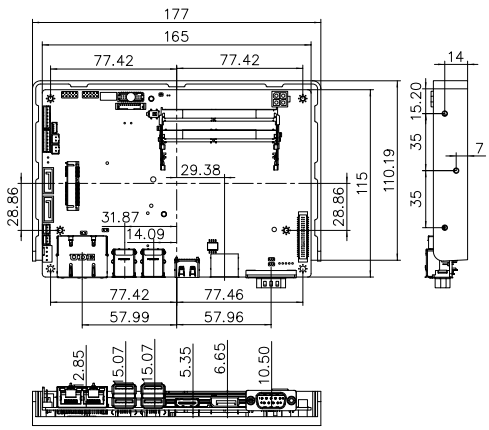

Packing List

1 x NANO-ULT5 single board computer with heatspreader	1 x Power cable
1 x Audio cable	2 x RS-232 cable
1 x SATA with power cable kit	1 x QIG

Ordering Information

Part No.	Description
NANO-ULT5-C-R10**	EPIC SBC supports Intel® 14nm 8th Generation Mobile Celeron™4305UE (15W) on-board Processor (ULT) with HDMI/ LVDS/DP, Dual PCIe GbE, USB 3.2 Gen 2, PCIe Mini, M.2 A & M Key, SATA 6Gb/s, SPI TPM, COM, Audio and RoHS
NANO-ULT5-i3-R10	EPIC SBC supports Intel® 14nm 8th Generation Mobile Core™ i3-8145UE (15W) on-board Processor (ULT) with HDMI/LVDS/ DP, Dual PCIe GbE, USB 3.2 Gen 2, PCIe Mini, M.2 A & M Key, SATA 6Gb/s, SPI TPM, COM, Audio and RoHS
NANO-ULT5-i5-R10	EPIC SBC supports Intel® 14nm 8th Generation Mobile Core™ i5-8365UE (15W) on-board Processor (ULT) with HDMI/LVDS/ DP, Dual PCIe GbE, USB 3.2 Gen 2, PCIe Mini, M.2 A & M Key, SATA 6Gb/s, COM, SPI TPM, Audio and RoHS
NANO-ULT5-i7-R10	EPIC SBC supports Intel® 14nm 8th Generation Mobile Core™ i7-8665UE (15W) on-board Processor (ULT) with HDMI/LVDS/ DP, Dual PCIe GbE, USB 3.2 Gen 2, PCIe Mini, M.2 A & M Key, SATA 6Gb/s, COM, SPI TPM, Audio and RoHS

** Without full functions support, please refer to user manual

NANO-AL

EPIC SBC supports 14nm Intel® Pentium®/Celeron®/Atom™ on-board SoC with Dual HDMI/LVDS/iDP, Dual PCIe GbE, USB 3.2 Gen 1 (5Gb/s), PCIe Mini, M.2, SATA 6Gb/s, COM, Audio and RoHS, -40°C ~ 85°C

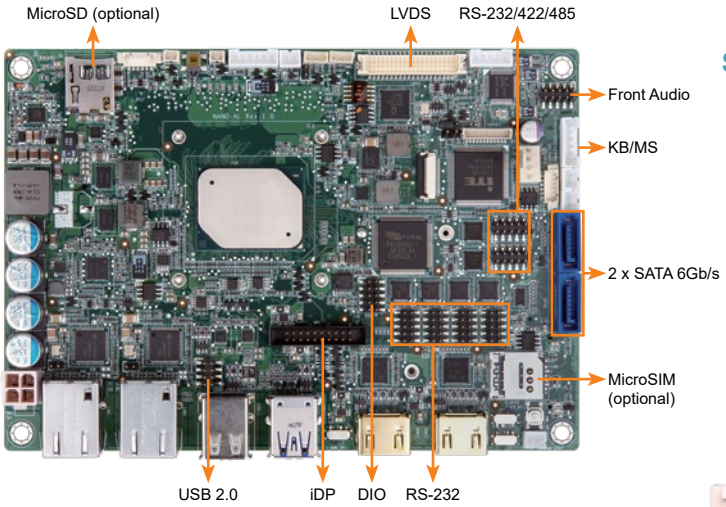

Support Triple Display Configuration

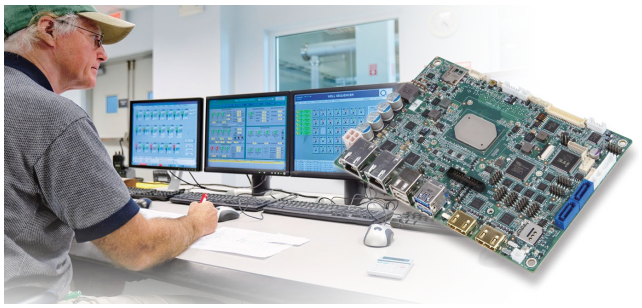

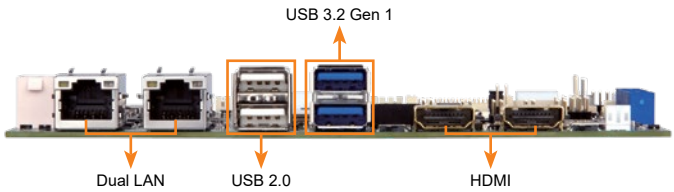



Specifications

- SoC
  Intel® Pentium® N4200 on-board SoC (up to 2.5GHz, quad-core, 2M Cache, TDP=6W)
  Intel® Celeron® N3350 on-board SoC (up to 2.4GHz, dual-core, 2M Cache, TDP=6W)
  Intel® Atom® x7-E3950 on-board SoC (up to 2.0GHz, quad-core, 2M Cache, TDP=12W)
  Intel® Atom® x5-E3940 on-board SoC (up to 1.8GHz, quad-core, 2M Cache, TDP=9W)
  Intel® Atom® x5-E3930 on-board SoC (up to 1.8GHz, dual-core, 2M Cache, TDP=6W)
- BIOS
  AMI UEFI BIOS
- Memory
  One 204-pin 1866/1600MHz Single-channel DDR3L SO-DIMM supports up to 8GB
- Graphics Engine
  Intel® HD Graphics Gen9 Low Power, 18 Execution Units
  4K Codec Decode & Encode for HEVC 4, H.264, VP8, SVC, MVC
- Display Output
  Triple independent display
  1 x 18/24-bit dual-channel LVDS (up to 1920x1200@60Hz)
  2 x HDMI (up to 3840x2160 @ 30Hz)
  1 x iDP interface for HDMI. LVDS, VGA, DVI, DP (up to 4096x2304@60Hz) (colay with HDMI1)
- Ethernet
  Intel® I211-AT PCIe controller
- External I/O Interface
  2 x USB 3.2 Gen 1 (5Gb/s)
  2 x USB 2.0
- Internal I/O Interface
  1 x KB/MS (1x6 pin)
  2 x USB 2.0 (2x4 pin, P=2.0)
  2 x RS-232/422/485 (2x5 pin, P=2.0)
  4 x RS-232 (2x5 pin, P=2.0)
  2 x SATA 6Gb/s with 5V SATA power connector (no RAID)
- SMBus
  1 x SMBus (1x4 pin)
- I²C
  1 x I²C (1x4 pin)
- Audio
  Realtek ALC888S HD Audio codec
  1 x Front audio (2x5 pin)
- Front Panel
  1 x Power LED & HDD LED (1x6 pin)
  1 x Power button (1x2 pin)
  1 x Reset button (1x2 pin)
- LAN LED
  2 x LAN LED (1x2 pin)
- Expansion
  1 x Full/Half-size PCIe Mini slot with SIM holder (optional)
  1 x M.2 2242 (B key, SATA, USB 2.0, USB 3.2 Gen 1 (5Gb/s) signal only)
  1 x Micro SD (Optional)
- Digital I/O
  8-bit digital I/O (2x5 pin)
- Fan Connector
  1 x Smart fan connector (1x4 pin)
- Power Supply
  9V~30V DC input
  1 x Internal power connector (2x2 pin)
  Support AT/ATX mode
- Watchdog Timer
  Software programmable, supports 1~255 sec. system reset
- Power Consumption
  12V@2.13A (Intel® Pentium® N4200 CPU with one 8GB 1600MHz DDR3L memory)
  12V@2.81A (Intel® Atom™ x7-E3950 CPU with one 8GB 1600MHz DDR3L memory)
- Operating Temperature: -20°C ~ 70°C / -40°C ~ 85°C (NANO-AL-ExW2)
- Storage Temperature: -40°C ~ 85°C
- Operating Humidity: 5% ~ 95%, non-condensing
- Dimensions: 115mm x 165mm
- Weight: GW: 850g / NW: 350g
- CE/FCC compliant

Features

- EPIC SBC supports Intel® 14nm Generation Atom®, Celeron® or Pentium® on-board SoC supports single-channel DDR3L SO-DIMMs
- Triple independent display support
- Wide range 9V~30V DC input design
- COM, USB 3.2 Gen 1 (5Gb/s), SATA 6Gb/s, M.2 and audio support
- Support temperature operation: -20°C ~ 70°C / -40°C ~ 85°C (NANO-AL-ExW2)

Packing List

1 x NANO-AL single board computer with Heatsink	1 x RS-232 cable
1 x SATA with power cable kit	1 x Power cable
1 x Screw set (for half-size PCIe Mini card)	1 x QIG

Ordering Information

Part No.	Description
NANO-AL-N2-R10**	EPIC SBC supports Intel® 14nm quad-core Pentium® N4200 2.5GHz on-board SoC with Dual HDMI/LVDS/iDP, Dual PCIe GbE, USB 3.2 Gen 1 (5Gb/s), PCIe Mini, M.2, SATA 6Gb/s, COM, Audio and RoHS
NANO-AL-N1-R10	EPIC SBC supports Intel® 14nm dual-core Celeron® N3350 2.4GHz on-board SoC with Dual HDMI/LVDS/iDP, Dual PCIe GbE, USB 3.2 Gen 1 (5Gb/s), PCIe Mini, M.2, SATA 6Gb/s, COM, Audio and RoHS
NANO-AL-E3W2-R10**	EPIC SBC supports Intel® 14nm quad-core Atom® x7-E3950 2.0GHz on-board SoC with Dual HDMI/LVDS/iDP, Dual PCIe GbE, USB 3.2 Gen 1 (5Gb/s), PCIe Mini, M.2, SATA 6Gb/s, COM, Audio and RoHS, -40°C ~ 85°C
NANO-AL-E2W2-R10**	EPIC SBC supports Intel® 14nm quad-core Atom® x5-E3940 1.8GHz on-board SoC with Dual HDMI/LVDS/iDP, Dual PCIe GbE, USB 3.2 Gen 1 (5Gb/s), PCIe Mini, M.2, SATA 6Gb/s, COM, Audio and RoHS, -40°C ~ 85°C
NANO-AL-E1W2-R10**	EPIC SBC supports Intel® 14nm dual-core Atom® x5-E3930 1.8GHz on-board SoC with Dual HDMI/LVDS/iDP, Dual PCIe GbE, USB 3.2 Gen 1 (5Gb/s), PCIe Mini, M.2, SATA 6Gb/s, COM, Audio and RoHS, -40°C ~ 85°C
32000-070301-RS	Dual-port USB cable, 210mm, P=2.0
32006-001100-201-RS	PS/2 KB/MS cable, 135mm, P=2.0
DP-DP-R10	DisplayPort to DisplayPort converter board (for IEI iDP connector)
DP-DVI-R10	DisplayPort to DVI-D converter board (for IEI iDP connector)
DP-HDMI-R10	DisplayPort to HDMI converter board (for IEI iDP connector)
DP-LVDS-R10	DisplayPort to 24-bit dual-channel LVDS converter board (for IEI iDP connector)
DP-VGA-R10	DisplayPort to VGA converter board (for IEI iDP connector)

**By order production, MOQ: 100

NANO-ULT3

EPIC SBC supports Intel® 14nm 6th Generarion Mobile Core™ i7/i5/i3 and Celeron® on-board Processor (ULT) with HDMI/LVDS/iDP, Dual PCIe GbE, USB 3.2 Gen 1 (5Gb/s), PCIe Mini, SATA 6Gb/s, mSATA, COM, Audio and RoHS

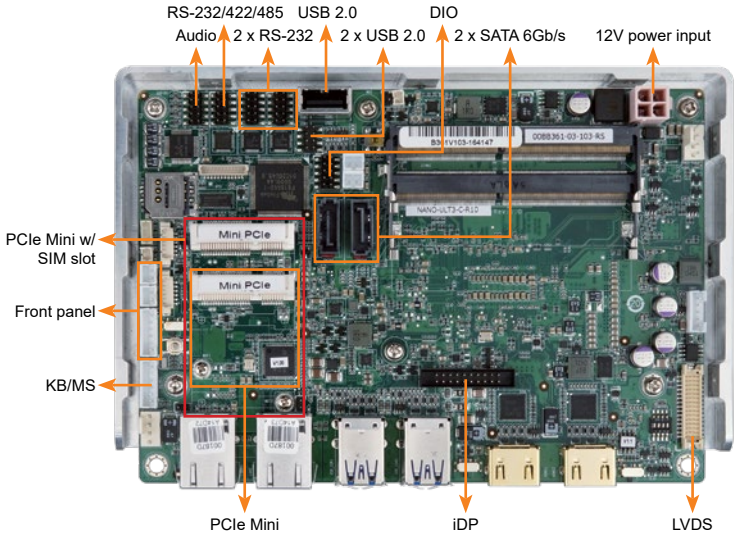

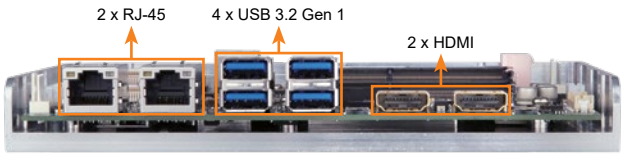



Features

- EPIC SBC with 6th generation Intel® ULT proccessor supports dual-channel DDR4 SO-DIMMs
- Triple independent display support
- Easy assembly heat spreader for thermal management
- Full-size PCIe Mini slot with SIM sockets for 3G/LTE expansion
- COM, USB 3.2 Gen 1 (5Gb/s), SATA 6Gb/s, mSATA, eMMC 5.0 and audio support

Specifications

◆ SoC
6th generation Intel® mobile ULT on-board SoC
Intel® Core™ i7-6600U (up to 3.4GHz, dual-core, 4MB cache, TDP=15W)
Intel® Core™ i5-6300U (up to 3.0GHz, dual-core, 3MB cache, TDP=15W)
Intel® Core™ i3-6100U (up to 2.3GHz, dual-core, 3MB cache, TDP=15W)
Intel® Celeron® processor 3955U (up to 2.0GHz, dual-core, 2MB cache, TDP=15W)

◆ BIOS
AMI UEFI BIOS

◆ Memory
Two 260-pin 2133/1866 MHz dual-channel DDR4 non-ECC unbuffered SO-DIMMs support up to 32GB

◆ Graphics Engine
Intel® HD Graphics Gen 9 Engine with 16 low-power execution units, supporting DX11/12, OpenGL 4.3/4.4 and OpenCL2.x, ES 2.0

◆ Display Output
Triple independent display
2 x HDMI (up to 4096x2160@24Hz)
1 x 18/24-bit dual-channel LVDS (up to 1920x1200@60Hz)
1 x iDP interface for HDMI, LVDS, VGA, DVI, DP (up to 3840x2160@60Hz) (colay with HDMI1)

◆ Ethernet
LAN1: Intel® I219-LM PHY with Intel® AMT 11.0 supported
LAN2: Intel® I211-AT PCIe GbE controller

◆ External I/O Interface
4 x USB 3.2 Gen 1 (5Gb/s)

◆ Internal I/O Interface
1 x 8 GB eMMC (optional)
1 x KB/MS (1x6 pin)
1 x RS-232/422/485 (2x5 pin, P=2.0)
2 x SATA 6Gb/s with 5V SATA power connector (no RAID)
1 x USB 2.0 (180° Type-A)
2 x USB 2.0 (2x4 pin, P=2.0)
2 x RS-232 (2x5 pin, P=2.0)

◆ SMBus
1 x SMBus (1x4 pin)

◆ Audio
Realtek ALC888S HD Audio codec
1 x Front audio (2x5 pin)

◆ Front panel
1 x Power LED & HDD LED (1x6 pin)
1 x Power button (1x2 pin)
1 x Reset button (1x2 pin)

◆ LAN LED
2 x LAN LED (1x2 pin)

◆ Expansion
1 x Full-size PCIe Mini card slot (with SIM holder & mSATA support)
1 x Half-size PCIe Mini card slot

◆ Digital I/O
8-bit digital I/O (2x5 pin)

◆ Fan Connector
1 x CPU fan connector (1x4 pin)
1 x System fan connector (1x4 pin)

◆ Power Supply
12V only DC input
1 x Internal power connector (2x2 pin)
Support AT/ATX mode

◆ Watchdog Timer
Software programmable supports 1~255 sec. system reset

◆ Power Consumption
12V@2.48A (Intel® Core™ i3-6100U CPU with two 8 GB memory)

◆ Operating Temperature: -20°C ~ 60°C

◆ Storage Temperature: -30°C ~ 70°C

◆ Operating Humidity: 5% ~ 95%, non-condensing

◆ Dimensions: 115mm x 165mm

◆ Weight: GW: 850g / NW: 350g

◆ CE/FCC compliant

Dimensions *(Unit: mm)*

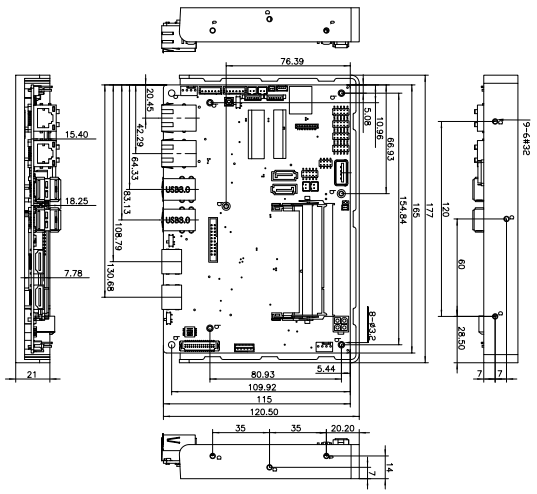

Packing List

1 x NANO-ULT3 single board computer with heatspreader	1 x Audio cable
1 x RS-232 cable	1 x Power cable
1 x SATA with power cable kit	1 x QIG

Ordering Information

Part No.	Description
NANO-ULT3-i7-R10	EPIC SBC supports Intel® 14nm 6th Generation Mobile Core™ i7-6600U (15W) on-board Processor (ULT) with HDMI/LVDS/iDP, Dual PCIe GbE, USB 3.2 Gen 1 (5Gb/s), SATA 6Gb/s, Dual PCIe Mini, mSATA, COM, Audio and RoHS
NANO-ULT3-i5-R10	EPIC SBC supports Intel® 14nm 6th Generation Mobile Core™ i5-6300U (15W) on-board Processor (ULT) with HDMI/LVDS/iDP, Dual PCIe GbE, USB 3.2 Gen 1 (5Gb/s), SATA 6Gb/s, Dual PCIe Mini, mSATA, COM, Audio and RoHS
NANO-ULT3-i3-R10	EPIC SBC supports Intel® 14nm 6th Generation Mobile Core™ i3-6100U (15W) on-board Processor (ULT) with HDMI/LVDS/iDP, Dual PCIe GbE, USB 3.2 Gen 1 (5Gb/s), SATA 6Gb/s, Dual PCIe Mini, mSATA, COM, Audio and RoHS
NANO-ULT3-C-R10	EPIC SBC supports Intel® 14nm 6th Generation Mobile Celeron® 3955U (15W) on-board Processor (ULT) with HDMI/LVDS/iDP, Dual PCIe GbE, USB 3.2 Gen 1 (5Gb/s), SATA 6Gb/s, Dual PCIe Mini, mSATA, COM, Audio and RoHS
32001-008600-200-RS	Dual-port USB cable, 210mm, P=2.0
32006-001100-201-RS	PS/2 KB/MS cable, 135mm/110mm, P=2.0

NANO-BTW2 BT-i1

EPIC SBC supports 22nm Intel® Atom™/Celeron® on-board SoC with VGA, HDMI, LVDS, Dual Intel® PCIe GbE, USB 3.2 Gen 1 (5Gb/s), Dual PCIe Mini, SATA 3Gb/s, mSATA, COM, Audio and RoHS

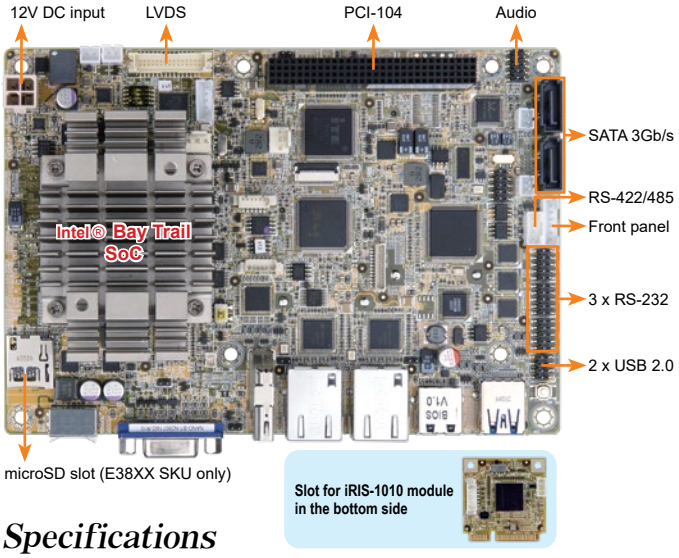

Highly efficient and power optimized multi-format codec engine

- **Full HW Acceleration for Video Decoding**
  H.264, VC1 MPEG2, MVC, VP8, MPEG-4/H.263 MJPEG formats

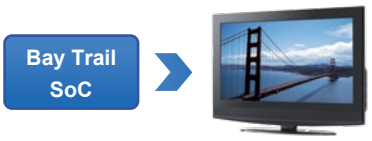

- **Video Encoding**
  » Full HW acceleration for H.264
  » Hybird HW acceleration of MPEG2



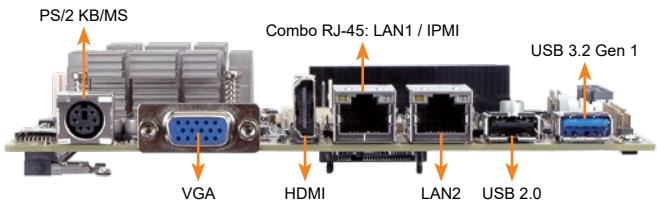



Specifications

- ◆ SoC
  Intel® Atom™ E3827 on-board SoC (1.75GHz, dual-core, 1MB cache, TDP=8W)
  Intel® Atom™ E3826 on-board SoC (1.46GHz, dual-core, 1MB cache, TDP=7W)
  Intel® Atom™ E3815 on-board SoC (1.46GHz, single-core, 512KB cache, TDP=5W)
  Intel® Celeron® J1900 on-board SoC (2GHz, quad-core, 2MB cache, TDP=10W)
  Intel® Celeron® N2807 on-board SoC (1.58GHz, dual-core, 2MB cache, TDP=4.3W)
- ◆ BIOS
  AMI UEFI BIOS
- ◆ Memory
  One 204-pin 1333/1066 MHz single-channel unbuffered DDR3L SDRAM SO-DIMM supports up to 8 GB (J1900, N2930, E3827, E3826, E3815) or 4 GB (N2807)
- ◆ Graphics Engine
  Intel® HD Graphics Gen 7 Engine with four execution units, supporting DX11.1, OpenGL 4.2 and OpenCL1.2
- ◆ Display Output
  Dual independent display
  1 x VGA (up to 2560x1600@60 Hz)
  1 x HDMI (up to 1920x1080@60 Hz)
  1 x 18/24-bit dual-channel LVDS (up to 1920x1200@60Hz)
- ◆ Ethernet
  » NANO-BT-i1
  LAN1: Intel® I210-AT PCIe controller with NCSI support
  LAN2: Intel® I211-AT PCIe controller
  » NANO-BT-E38XX1W2
  LAN1: Intel® I210-IT PCIe controller with NCSI support
  LAN2: Intel® I210-IT PCIe controller
- ◆ External I/O Interface
  1 x PS/2 KB/MS
  1 x USB 2.0
  1 x USB 3.2 Gen 1 (5Gb/s)
- ◆ Internal I/O Interface
  1 x RS-422/485 (1x4 pin, P=2.0)
  2 x SATA 3Gb/s with 5V SATA power connector (no RAID)
  2 x USB 2.0 (2x4 pin, P=2.0)
  3 x RS-232 (2x5 pin, P=2.0)
- ◆ iRIS Remote Management Module: 1 x iRIS-1010 slot
- ◆ SMBus: 1 x SMBus (1x4 pin)
- ◆ Audio
  Realtek ALC888S HD Audio codec
  1 x Front audio (2x5 pin)
- ◆ Front Panel
  1 x Power LED & HDD LED (1x6 pin)
  1 x Power button (1x2 pin)
  1 x Reset button (1x2 pin)
- ◆ LAN LED: 2 x LAN LED (1x2 pin)
- ◆ Expansion
  1 x Full-size PCIe Mini card slot (support mSATA co-lay SATA port 2)
  1 x PCI-104 slot (PCI signal)
  1 x microSD slot (E38XX SKU only)
- ◆ Digital I/O: 8-bit digital I/O (2x5 pin)
- ◆ Fan Connector
  1 x CPU smart fan (1x3 pin)
  1 x System smart fan (1x3 pin)
- ◆ Power Supply
  12V only DC input
  1 x Internal power connector (2x2 pin)
  Support AT/ATX mode
- ◆ Power Consumption
  12V@1.52A (Intel® Atom™ processor J1900 with one 8 GB 1333 MHz DDR3 memory)
- ◆ Watchdog Timer: Software programmable, support 1~255 sec. system reset
- ◆ Operating Temperature: -20°C ~ 60°C, -40°C ~ 85°C (NANO-BT-E38XX1W2)
- ◆ Storage Temperature: -30°C ~ 70°C, -40°C ~ 85°C (NANO-BT-E38XX1W2)
- ◆ Operating Humidity: 5% ~ 95%, non-condensing
- ◆ Dimensions: 115mm x 165mm
- ◆ Weight: GW: 850g / NW: 350g
- ◆ CE/FCC compliant

Features

- EPIC SBC supports 22nm Intel® Atom™ or Celeron® on-board SoC
- Supports dual independent display with LVDS, VGA and HDMI
- 1.35V DDR3L 1333/1066 MHz SDRAM support up to 8 GB
- Support IPMI 2.0 with iRIS-1010 module

Packing List

1 x NANO-BT single board computer with heatsink	
1 x Power cable	2 x SATA with power cable kit
2 x RS-232 cable	1 x QIG

Ordering Information

Part No.	Description
NANO-BT-E38XX1W2-R11**	EPIC SBC supports Intel® 22nm single-Core Atom™ E381XX on-board SoC with VGA/HDMI/LVDS, Dual PCIe GbE, Dual PCIe Mini, USB 3.2 Gen 1 (5Gb/s), SATA 3Gb/s, mSATA , COM, audio and RoHS, -40~85°C
NANO-BT-i1-J19001-R11	EPIC SBC supports Intel® 22nm quad-core J1900 2.0GHz (10W) on-board SoC with VGA/HDMI/LVDS, Dual PCIe GbE, PCIe Mini, USB 3.2 Gen 1 (5Gb/s), SATA 3Gb/s, mSATA, COM, iRIS-1010, Audio and RoHS
NANO-BT-i1-N28071-R11	EPIC SBC supports Intel® 22nm dual-core N2807 1.58GHz (4.3W) on-board SoC with VGA/HDMI/LVDS, Dual PCIe GbE, PCIe Mini, USB 3.2 Gen 1 (5Gb/s), SATA 3Gb/s, mSATA, COM, iRIS-1010, Audio and RoHS
NANO-BT-i1-E38XX1-R11**	EPIC SBC supports Intel® Atom™ E38XX on-board SoC with VGA/HDMI/LVDS, Dual PCIe GbE, USB 3.2 Gen 1 (5Gb/s), PCIe Mini, SATA 3Gb/s, mSATA, COM, iRIS-1010, Audio and RoHS
NANO-BT-J19001-ECO-R10	Intel® 22nm Quad-Core J1900 2.0GHz (10W) on-board SoC with VGA/HDMI/LVDS, Dual PCIe GbE, PCIe Mini, USB 3.2 Gen 1 (5Gb/s), SATA, mSATA , COM, Audio, ECO packing and RoHS (10 pcs/pack)
iRIS-1010-R10	IPMI 2.0 adapter card with AST1010 BMC chip (w/o KVM over IP function) for PCIe Mini socket interface
32001-008600-200-RS	Dual-port USB 2.0 cable, 210mm, P=2.0
32006-000300-100-RS	PS/2 KB/MS Y-cable without bracket, 140mm/120mm
32205-003800-300-RS	RS-422/485 cable, 200mm, P=2.0

**By order production, MOQ: 100

NANO-QM871-i1

EPIC SBC supports 4th Generation Intel® Mobile Processor with VGA/Dual HDMI/LVDS, Dual PCIe GbE, USB 3.2 Gen 1 (5Gb/s), PCIe Mini, iRIS-1010

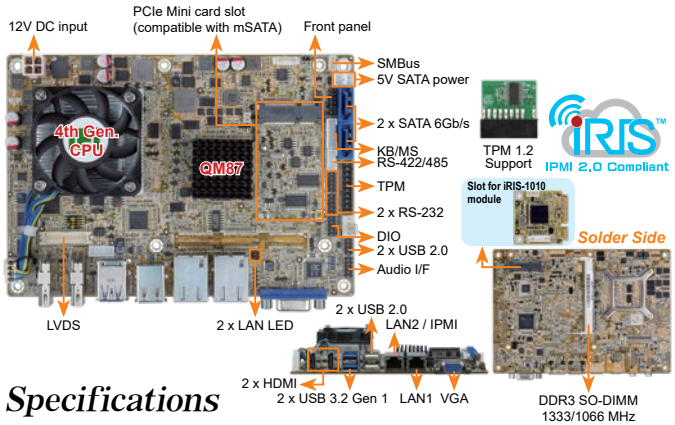

Specifications

- CPU
  Intel® mobile Core™ i7-4700EQ on-board processor with Intel® AMT 9.0 support (2.4GHz, quad-core, 6MB cache, TDP=47W)
  Intel® mobile Core™ i5-4400E on-board processor with Intel® AMT 9.0 support (2.7GHz, dual-core, 3MB cache, TDP=37W)
  Intel® mobile Core™ i3-4100E on-board processor (2.4GHz, dual-core, 3MB cache, TDP=37W)
  Intel® mobile Celeron® 2000E on-board processor (2.2GHz, dual-core, 2MB cache, TDP=37W)
  Intel® mobile Core™ i5-4402E on-board processor with Intel® AMT 9.0 support (1.6GHz, dual-core, 3MB cache, TDP=25W)
  Intel® mobile Core™ i3-4102E on-board processor
  (1.6GHz, dual-core, 3MB cache, TDP=25W)
  Intel® mobile Celeron® 2002E on-board processor
  (1.5GHz, dual-core, 2MB cache, TDP=25W)
- Chipset: Intel® QM87
- BIOS: UEFI BIOS
- Memory: One 204-pin 1600/1333 MHz dual-channel DDR3 & DDR3L SDRAM unbuffered DIMM supports up to 8 GB
- Graphics Engine
  Intel® HD Graphics Gen 7.5 supports DX11.1 and OpenCL 1.2, OpenGL 3.2
  Full MPEG2, VC1, AVC Decode
- Display Output
  1 x VGA (up to 1920x1200@60Hz)
  1 x 18/24-bit dual-channel LVDS (up to 1920x1200@60Hz)
  2 x HDMI (up to 2500x1600@60Hz)
- TPM: 1 x TPM connector (2x10 pin)
- SMBus: 1 x SMBus (1x4 pin)
- Ethernet
  LAN1: Intel® I217-LM PHY with Intel® AMT 9.0 support
  LAN2: Intel® I210-AT PCIe controller
- External I/O Interface
  2 x USB 2.0 2 x USB 3.2 Gen 1 (5Gb/s)
- Internal I/O Interface
  1 x KB/MS (1x6 pin)
  1 x RS-422/485(1x4 pin, P=2.0)
  2 x RS-232 (2x5 pin, P=2.0)
  2 x SATA 6Gb/s with 5V SATA power connector (RAID 0,1 supported)
  2 x USB 2.0 (2x4 pin, P=2.0)
- iRIS Remote Management Module: 1 x iRIS-1010 slot
- Audio
  Realtek ALC888S HD Audio codec
  1 x Front audio (2x5 pin)
- Front Panel: 1 x Front Panel (2x5 pin)
- LAN LED: 2 x LAN LED (1x2 pin)
- Expansion
  1 x Full-size PCIe Mini card slot (supports mSATA)
  1 x PCIe/104 Type 2 slot (optional)
- Watchdog Timer: Software programmable, support 1~255 sec. system reset
- Digital I/O: 8-bit digital I/O (2x5 pin)
- Fan Connector
  1 x CPU smart fan (1x4 pin)
  1 x System smart fan (1x4 pin)
- Power Supply
  12V only DC input
  1 x Internal power connector (2x2 pin)
  Support AT/ATX mode
- Power Consumption
  12V@4.78A (Intel® Core™ i7-4770EQ 2.4GHz CPU with 4 GB 1333 MHz DDR3 memory)
- Operating Temperature: -10°C ~ 60°C
- Storage Temperature: -20°C ~ 60°C
- Operating Humidity: 5% ~ 95%, non-condensing
- Dimensions: 115 mm x 165 mm
- Weight: GW: 850g / NW: 350g
- CE/FCC compliant

Packing List

1 x NANO-QM871-i1 single board computer	
1 x Audio cable	2 x RS-232 cable
1 x CPU cooler	2 x SATA with power cable kit
1 x Power cable	1 x QIG

Ordering Information

Part No.	Description
NANO-QM871-i1-i7-R11	EPIC SBC supports Intel® 22nm Mobile Core™ i7-4700EQ on-board Processor with VGA/Dual HDMI/LVDS, Dual PCIe GbE, AMT 9.0, PCIe Mini, USB 3.2 Gen 1 (5Gb/s), SATA 6Gb/s, iRIS-1010, Audio and RoHS
NANO-QM871-i1-i5-R11	EPIC SBC supports Intel® 22nm Mobile Core™ i5-4400E on-board Processor with VGA/Dual HDMI/LVDS, Dual PCIe GbE, AMT 9.0, PCIe Mini, USB 3.2 Gen 1 (5Gb/s), SATA 6Gb/s, iRIS-1010, Audio and RoHS
NANO-QM871-i1-i3-R11	EPIC SBC supports Intel® 22nm Mobile Core™ i3-4100E on-board Processor with VGA/Dual HDMI/LVDS, Dual PCIe GbE, PCIe Mini, USB 3.2 Gen 1 (5Gb/s), SATA 6Gb/s, iRIS-1010, Audio and RoHS
NANO-QM871-i1-C-R11	EPIC SBC supports Intel® 22nm Celeron 2000E on-board Processor (37W) with VGA/Dual HDMI/LVDS, Dual PCIe GbE, PCIe Mini, USB 3.2 Gen 1 (5Gb/s), SATA 6Gb/s, iRIS-1010, Audio and RoHS
iRIS-1010-R10	IPMI 2.0 adapter card with AST1010 BMC chip (W/O KVM over IP function) for PCIe Mini socket interface
32001-008600-200-RS	Dual-port USB 2.0 cable, 210mm. P=2.0
32006-001100-201-RS	PS/2 KB/MS cable, 135mm/110mm, P=2.0
32205-003800-300-RS	RS-422/485 cable, 200mm, P=2.0
TPM-IN01-R20	20-pin Infineon TPM module, software management tool, firmware v3.17

Note: Models with other CPUs not listed in the table are requested by MOQ - 100 pcs/lot.

NANO-LX

EPIC SBC with AMD LX800 CPU, Audio, VGA/LVDS, SATA and RAID 0, 1, JBOD Function Support

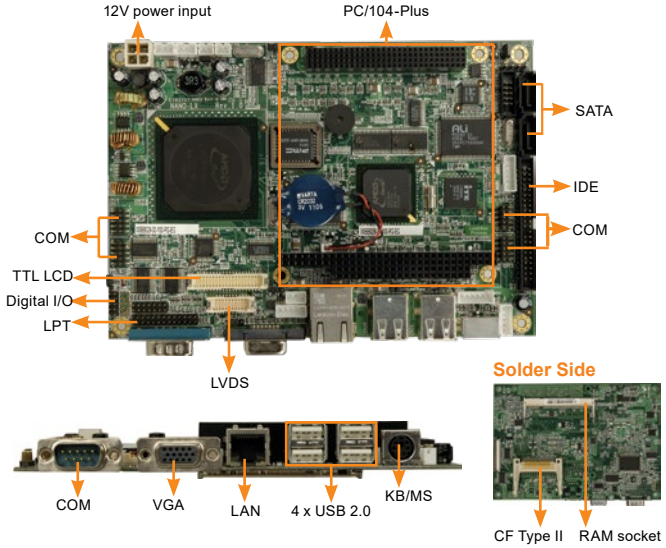

Features

- EPIC form factor AMD LX800 processor embedded board with RoHS compliant
- DDR 400 MHz SO-DIMM SDRAM up to 1 GB
- VGA, 24-bit TTL, and 18-bit single-channel LVDS
- SATA RAID 0, 1, JBOD function support
- Complete I/O support with two SATA, IDE, PC/104-Plus and four USB 2.0

Specifications

- CPU
  AMD Geode™ LX800 (500 MHz) processor
- Chipset: AMD Geode LX800 + AMD CS5536
- BIOS: AWARD
- System Memory
  One 200-pin 400/333 MHz DDR SDRAM SO-DIMM supports up to 1GB
- Ethernet
  LAN: 10/100Mbps Realtek RTL8100C
- External I/O Interface
  1 x PS/2 KB/MS
  1 x RS-232
  4 x USB 2.0
- Internal I/O Interface
  1 x CF Type II 1 x IDE
  1 x LPT 1 x RS-232/422/485
  4 x USB 2.0 5 x RS-232
  2 x SATA (VIA VT6421A RAID 0, 1 function support)
- Expansion
  1 x PC/104 slot (ISA)
  1 x PCI-104 slot (PCI)
- Audio: Realtek ALC203 with AC'97 codec
- Digital I/O: 8-bit digital I/O (2x5 pin)
- Infrared Interface: 1 x Infared interface (1x5 pin)
- Display Output
  1 x VGA (up to 1920x1440@60Hz)
  1 x 24-bit single-channel TTL (up to 1600x1200@60Hz)
  1 x 18-bit single-channel LVDS (up to 1280x1024@60Hz)
- Watchdog Timer: Software programmable supports 1~255 sec. system reset
- Power Supply: 12V only DC input
  1 x Internal power connector (2x2 pin)
  support AT/ATX mode
- Power Consumption: 12V@0.92A (AMD LX800 with 400 MHz 256MB DDR RAM)
- Operating Temperature : 0°C ~ 60°C
- Storage Temperature: -10°C ~ 70°C
- Operating Humidity: 5% ~ 95%, non-condensing
- Dimensions: 115 mm x 165 mm
- Weight: GW: 950g / NW: 350g
- CE/FCC compliant

Packing List

1 x NANO-LX single board computer	1 x SATA power cable
1 x Audio cable	2 x RS-232 port cable
1 x IDE flat cable 44p/44p	2 x SATA cable
1 x KB/MS Y cable	1 x Mini iumper pack
1 x Power cable	1 x QIG

Ordering Information

Part No.	Description
NANO-LX-800-R12	EPIC SBC, AMD LX800 500 MHz processor, VGA/LVDS/TTL, LAN, SATA and Audio
32102-022100-100-RS	ATX power cable, 300mm
32200-015100-RS	LPT cable, 280mm, P=2.0
19800-004300-100-RS	RS-232 & RS-422/485 cable with bracket, 14-pin to two DB-9, 250mm, P=2.0

EPIC NANO Dimensions (Unit: mm)

NANO-AL

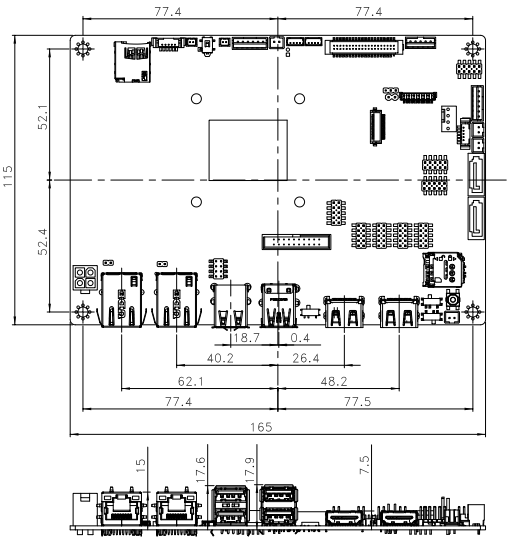

NANO-QM871-i1

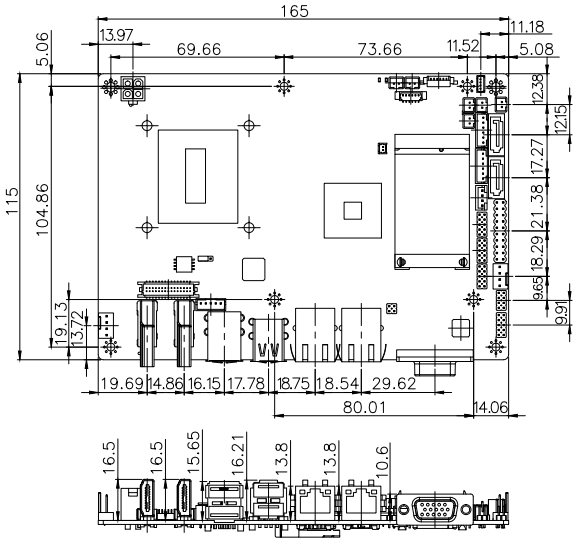

NANO-LX

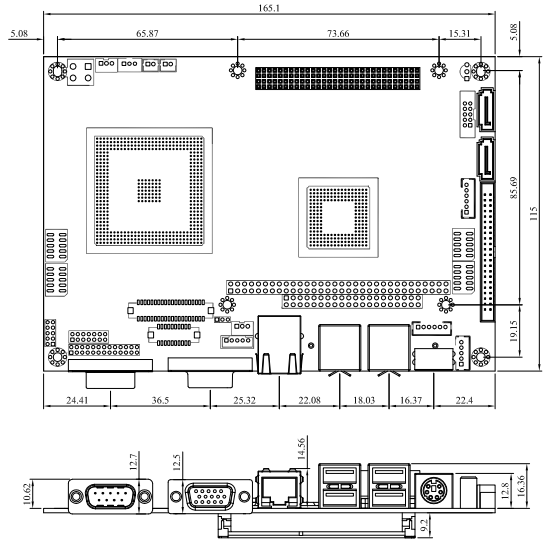

NANO-BTW2/NANO-BT-i1

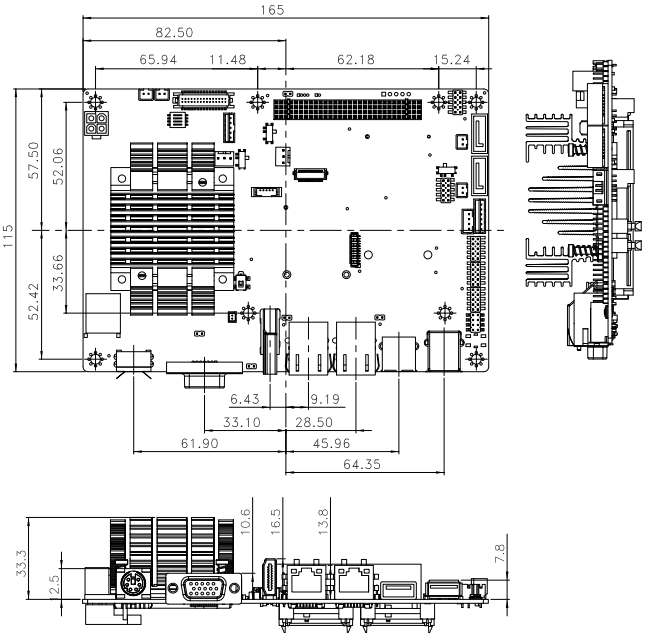

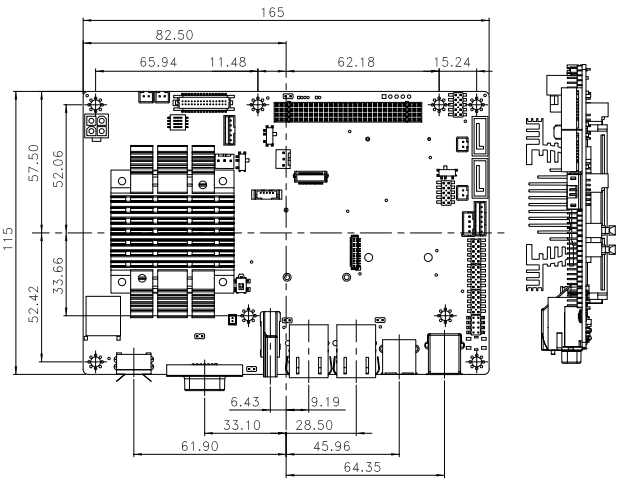

3.5″ WAFER Selection Guide











Model Name	WAFER-JL	WAFER-ULT6	WAFER-ULT5	WAFER-AL	WAFER-ULT4/ULT3	WAFER-BW
CPU Socket	On Board	On Board	On Board	On board	On board	On board
CPU Type	Intel® Atom®, Intel® Pentium® and Celeron® N Series processors (Code name: Jasper Lake)	Intel® Mobile ULT processors (Code name: Tiger Lake)	Intel® Mobile ULT processor	Intel® Celeron®/ Pentium® on-board SoC	Intel® Mobile ULT processor	Intel® Pentium®/ Celeron® SoC
Chipset	Intel® Atom®, Intel® Pentium® and Celeron® N Series processors (Code name: Jasper Lake)	Intel® Mobile ULT processors (Code name: Tiger Lake)	Intel® Mobile ULT processor	Intel® Celeron®/ Pentium® on-board SoC	Intel® Mobile ULT processor	Intel® Pentium®/ Celeron® SoC
Memory	One 204-pin 2933 MHz Dual-channel DDR4 SO-DIMMs support up to 16 GB	One 204-pin 3200 MHz Dual-channel DDR4 SO-DIMMs support up to 64 GB	1 x 260-pin 2400MHz DDR4 SDRAM SO-DIMM (channel 1)	1 x 204-pin 1866/1600 MHz single-channel DDR3L SO-DIMM (system max. 8 GB)	1 x 260-pin 2133MHz DDR4 SDRAM SO-DIMM (channel 1) On-board DDR4 memory (optional 4/8GB support)	1 x 204-pin 1600/1333 MHz single-channel DDR3L SDRAM unbuffered SO-DIMM slot (system max. 8 GB)
Display Interface	Triple independent display 2 x HDMI 1 x DP up to 3840x2160 @ 60Hz	Four independent displays 2 x HDMI 1 x LVDS 1 x DP++	Triple independent display 2 x HDMI 1 x 18/24-bit dual-channel LVDS	Triple independent display 1 x VGA 1 x DP++ 1 x 18/24-bit dual-channel LVDS 1 x iDP	Triple independent displays 1 x VGA 1 x HDMI 1 x 18/24-bit dual-channel LVDS 1 x iDP interface for HDMI, LVDS, VGA, DVI, DP	Triple independent display 2 x HDMI 1 x 18/24-bit dual-channel LVDS
Ethernet	3 x PCIe 2.5 GbE with Intal i225-V/LM	3 x PCIe 2.5 GbE with Intal i225-V/LM	LAN1: Intel® I211AT LAN2: Intel® I211AT LAN3: Intel® I219LM	LAN1: Realtek RTL8111 Controller LAN2: Realtek RTL8111 Controller	1 x Intel® I219LM 1 x Intel® I211AT	LAN1: Realtek RTL8111GN controller LAN2: Realtek RTL8111GN controller
iRIS Remote Management Module	N/A					
I/O Interface	1 x RS-232/422/485 1 x USB 3.2 Gen 1 2 x RS-232 3 x USB 3.2 Gen 2	1 x RS-232/422/485 2 x USB 3.2 Gen 2 2 x USB 2.0	1 x RS-232 1 x RS-232/422/485 (Support Auto Flow Control over RS-485) 4 x USB 3.2 Gen 2 2 x USB 2.0	2 x RS-232 2 x RS-232/422/485 2 x USB 3.2 Gen 1 4 x USB 2.0	2 x RS-232/422/485 4 x USB 3.2 Gen 1 2 x USB 2.0	1 x PS/2 KB/MS 2 x RS-232/422/485 2 x USB 3.2 Gen 1 4 x RS-232 4 x USB 2.0
Storage Interface	1 x SATA	2 x SATA	1 x SATA 6G/s with 5V SATA power connector	2 x SATA 6Gb/s with 5V SATA power connector	1 x SATA 6Gb/s with 5V SATA power connector	2 x SATA 6Gb/s with 5V SATA power connector (no RAID) 1 x eMMC4.51 (optional)
Audio	Realtek ALC888S HD Audio codec		N/A	Realtek ALC888S HD Audio codec	N/A	Realtek ALC888S HD Audio codec
Digital I/O	1 x 8-bit digital I/O (2x5 pin)		8-bit programmable digital I/O			
Power Consumption	TBD	TBD	12V@3.38A (Intel® Core™ i7-8665UE up to 1.7GHz CPU with 16GB 2666MHz DDR4 memory)	12V@2.57A (Intel® Pentium® N4200 up to 2.5GHz with 8GB DDR3L memory)	12V@4.27A (Intel® Core™ i7-6600U up to 3.4GHz CPU with 16GB (16GB x1) DDR4-2133 memory running in 3.0GHz)	12V@1.52A (Intel® Pentium® processor N3710 with 8 GB 1600MHz DDR3L memory)
Watchdog Timer	Software programmable and supports 1~255 sec. system reset					
Operating Environment	Temperature Range: -20°C ~ 60°C (-4°F ~ 140°F) Relative Humidity: 5% ~ 95%, non-condensing			Temperature Range: -20°C ~ 70°C (-4°F~158°F) Relative Humidity: 5% ~ 95%, non-condensing	Temperature Range: -20°C ~ 60°C (-4°F~140°F) Relative Humidity: 5% ~ 95%, non-condensing	
Expansion Slot	1 x M.2 (A Key) 1 x M.2 (B Key)	1 x M.2 (A Key) 1 x M.2 (B Key) 1 x M.2(B key)	1 x Full-size PCIe Mini slot (w/ SATA signal, support mSATA) 1 x M.2 slot with A Key 2230	2 x Full/Half-size PCIe Mini card slot (one supports mSATA, another one with SIM holder)	1 x Full-size PCIe Mini slot (w/ SATA signal, support mSATA) 1 x Full-size PCIe Mini slot (w/ SIM card slot support)	2 x Full/Half-size PCIe Mini card slot (one with SIM holder)
Recommended CPU Cooler	Heat Spreader	Heat Spreader	Heat Spreader	Heatsink	Heat Spreader	Heat Spreader

3.5″ WAFER Selection Guide



Model Name	WAFER-BTW2	WAFER-ULT2/ULT-i1	WAFER-BT-E38001W2	WAFER-BT	WAFER-KBN-i1	WAFER-LX-R12	WAFER-LX2-R12
CPU Socket	On board	On board	On Board	On board	On board	On board	On board
CPU Type	Intel® Atom™/ Celeron® SoC	Intel® Mobile ULT processor	Intel® Atom™ SoC	Intel® Atom™/ Celeron® SoC	AMD® Embedded G-Series SoC	AMD Geode™ LX800	AMD Geode™ LX800
Chipset	Intel® Atom™/ Celeron® SoC	Intel® Lynx Point SoC	Intel® Atom™ SoC	Intel® Atom™/ Celeron® on-board SoC	AMD® Embedded G-Series SoC	AMD Geode™ LX800 + AMD CS5536	AMD Geode™ LX800 + AMD CS5536
Memory	4 GB solder-down 1066/1333 MHz DDR3L memory (for E3845) 2 GB solder-down 1066/1333 MHz DDR3L memory (for E3825)	2 x 204-pin 1600/1333 MHz dual-channel DDR3L SO-DIMMs (system max. 16 GB)	On-board DDR3L memory 2GB for E3825 4GB for E3845	1 x 204-pin 1066/1333 MHz dual-channel DDR3L SO-DIMMs (system max. 8 GB)	1 x 204-pin 1600/1333 MHz dual-channel DDR3 & DDR3L SO-DIMM (system max. 8 GB)	1 x 200-pin 333/400 MHz. 1 GB (max.) DDR SO-DIMM	1 x 200-pin 400 MHz. 1 GB (max.) DDR SO-DIMM
Display Interface	Dual independent dispaly 1 x VGA 1 x 18/24-bit dual-channel LVDS 1 x iDP interface	Dual display supported 1 x VGA 1 x 18/24-bit dual-channel LVDS 1 x iDP interface	Dual display supported 1 x VGA 1 x 18/24-bit dual-channel LVDS 1 x iDP interface	Dual display supported 1 x VGA 1 x 18/24-bit dual-channel LVDS 1 x iDP interface	Dual display supported 1 x VGA 1 x 18/24-bit dual-channel LVDS 1 x iDP interface	Dual display supported 1 x VGA 1 x 18-bit single-channel LVDS 1 x 24-bit TTL	Dual display supported 1 x VGA 1 x 18-bit single-channel LVDS 1 x 24-bit TTL
Ethernet	LAN1: Intel® I210-IT PCIe controller LAN2: Intel® I210-IT PCIe controller	LAN1: Intel® I218LM PHY with Intel® AMT 9.0 support LAN2: Intel® I210-AT PCIe GbE controller	LAN1: Intel® I210-IT PCIe controller LAN2: Intel® I211-IT PCIe controller	LAN1: Intel® I210-AT PCIe controller with NCSI support LAN2: Intel® I211-AT PCIe controller	LAN1: Intel® I210-AT PCIe controller with NCSI support LAN2: Intel® I211-AT PCIe controller	Dual LAN: 10/100Mbps RTL8100C Ethernet Controller	LAN1: 10/100Mbps RTL8100C Ethernet Controller
iRIS Remote Management Module	N/A	1 x iRIS-1010 slot	N/A	N/A	1 x iRIS-1010 slot	N/A	N/A
I/O Interface	1 x PS/2 KB/MS 1 x RS-422/485 1 x USB 3.2 Gen 1 3 x RS-232 5 x USB 2.0	1 x PS/2 KB/MS 1 x RS-422/485 2 x USB 2.0 2 x USB 3.2 Gen 1 3 x RS-232	1 x PS/2 KB/MS 1 x RS-422/485 1 x RS-232 4 x USB 2.0	1 x PS/2 KB/MS 1 x RS-422/485 1 x USB 3.2 Gen 1 3 x RS-232 5 x USB 2.0	1 x PS/2 KB/MS 1 x RS-422/485 2 x USB 3.2 Gen 1 3 x RS-232 4 x USB 2.0	1 x LPT 1 x PS/2 for KB/MS 1 x RS-422/485 2 x RS-232 4 x USB 2.0	1 x RS-232/422/485 4 x USB 2.0 7 x RS-232
Storage Interface	2 x SATA 3Gb/s with 5V SATA power connector (no RAID) 1 x 4 GB on-borad SSD (optional) 1 x microSD 1 x mSATA	2 x SATA 6Gb/s with 5V power connector	2 x SATA 3Gb/s with 5V SATA power connector (no RAID)	2 x SATA 3Gb/s with 5V SATA power connector (no RAID)	2 x SATA 6Gb/s with 5V SATA power connector	2 x SATA 1.5Gb/s RAID 1 x IDE 1 x CF Type II	1 x IDE 1 x CF Type II
Audio	Realtek ALC888S HD Audio codec					Realtek ALC203 with AC'97 codec	
Digital I/O	8-bit programmable digital I/O						
Power Consumption	12V@1.32A (Intel® Atom™ processor E3845 with on-board 2 GB 1333 MHz DDR3L memory)	12V@2.72A (Intel® Core™ i5-4300U CPU with two 8 GB 1600 MHz DDR3 memory)	12V@1.332A (Intel® Atom E3840 Processor 1.91GHz with one 2 GB 1333 MHz DDR3 memory)	12V@1.45A (Intel® Celeron® Processor J1900 CPU with one 8 GB 1333 MHz DDR3L memory)	12V@2.12A (AMD GX-415GA 1.5GHz CPU with 1333 MHz 4 GB DDR3 memory)	5V@1.53A (AMD Geode™ LX 800 1 GB 400 MHz DDR)	5V@1.33A (AMD Geode™ LX800 512MB 333 MHz DDR)
Watchdog Timer	Software programmable and supports 1~255 sec. system reset						
Operating Environment	Temperature Range: -20°C ~ 60°C (-4°F~140°F) Relative Humidity: 5% ~ 95%, non-condensing	Temperature Range: -10°C ~ 60°C (14°F~140°F) Relative Humidity: 5% ~ 95% non-condensing	Temperature Range: -40°C ~ 85°C Relative Humidity: 5% ~ 95%, non-condensing	Temperature Range: -20°C ~ 60°C (-4°F~140°F) Relative Humidity: 5% ~ 95%, non-condensing	Temperature Range: 0°C ~ 60°C (32°F~140°F) Relative Humidity: 5% ~ 95% non-condensing	Temperature Range: 0°C ~ 60°C (32°F~140°F) Relative Humidity: 5% ~ 95% non- condensing	
Expansion Slot	2 x Full-size PCIe Mini card slot (one with SIM holder)	1 x Full-size PCIe Mini card slot (supports mSATA)	2 x Full-size PCIe Mini card slot (one supports mSATA)	1 x Full-size PCIe Mini card slot (supports mSATA)	1 x Full-size PCIe Mini card slot (supports mSATA)	1 x PC/104	1 x PC/104
Recommended CPU Cooler	Heatsink	Heat Spreader	Heatsink	N/A	GX-415GA (with hearsink) GX-210HA (with cooler)	Heatsink	Heatsink

WAFER-JL

3.5 SBC supports Intel® 10nm Gen 11 Pentium® Silver™ or Celeron® on-board SoC with Dual HDMI, DP, triple 2.5 GbE LAN port, USB 3.2 Gen 2, M.2, SATA 6Gb/s, COM, Audio and RoHS, -20°C ~ 60°C

Preliminary

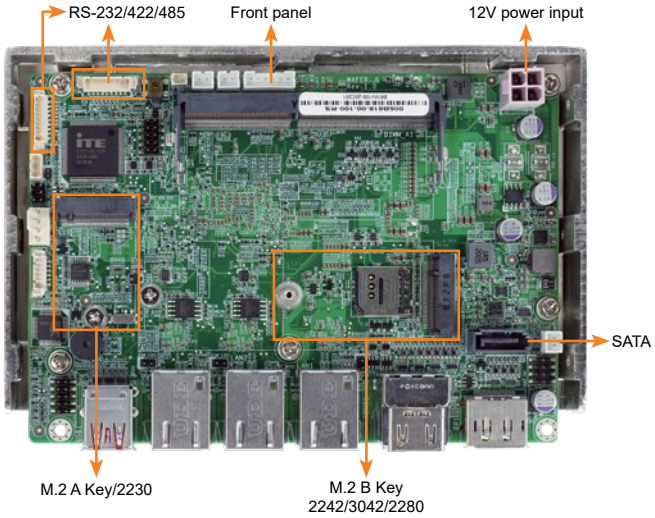

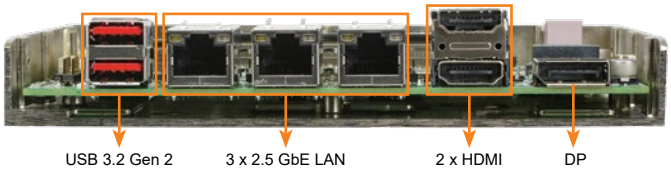



Specifications

- SoC
  Intel® Pentium® Silver N6005 on-board SoC (up to 3.30GHz, Quad-core, 4M Cache, TDP=10W)
  Intel® Celeron® N5105 on-board SoC (up to 2.90GHz, Quad-core, 4M Cache, TDP=10W)
  Intel® Celeron® N4505 on-board SoC (up to 2.90GHz, Dual-core, 2M Cache, TDP=10W)
  Intel® Pentium® Silver N6000 on-board SoC (up to 3.30GHz, Quad-core, 4M Cache, TDP=6W)
  Intel® Celeron® N5100 on-board SoC (up to 2.80GHz, Quad-core, 4M Cache, TDP=6W)
  Intel® Celeron® N4500 on-board SoC (up to 2.80GHz, Dual-core, 2M Cache, TDP=6W)
- BIOS
  AMI UEFI BIOS
- Memory
  One 204-pin 2933 MHz Dual-channel DDR4 SO-DIMMs support up to 16 GB
- Graphics Engine
  Intel® Gen11 UHD Graphics
- Display Output
  Dual Independent Displays
  2 x HDMI (up to 3840x2160 @ 30Hz)
  1 x DP up to 3840x2160 @ 60Hz
- Ethernet
  3 x PCIe 2.5 GbE with Intel® i225V/LM
- External I/O Interface
  2 x USB 3.2 Gen 2 (10Gb/s)
- Internal I/O Interface
  1 x SATA 6G/s with 5V SATA power connector (No RAID)
  2 x USB 2.0 (2x4 pin, P=2.0)
  2 x RS-232/422/485 (1x9 pin, P=1.25) from IT5571
- SMBus/ I²C
  1 x SMBus (1x4 pin, P=2.0)
- TPM
  On Board SPI TPM 2.0 (optional)
- Audio
  Realtek ALC888s
  1 x Analog HD audio (2x5 pin)
- Front Panel
  1 x Power LED & HDD LED (1x6 pin)
  1 x Power button (1x2 pin)
  1 x Reset button (1x2 pin)
- LAN LED
  3 x LAN LED (1x2 pin)
- Expansion
  1 x M.2 A Key for WIFI & BT
  1 x M.2 B Key for 5G
- Digital I/O
  1 x 8-bit digital I/O (2x5 pin)
- Fan Connector: 1 x System fan connector (1x4 pin)
- Power Supply: +12V DC input power (AT/ATX mode)
- Watchdog Timer: Software programmable support 1~255 sec. system reset
- Power Consumption: TBD
- Operating Temperature: -20°C ~ 60°C
- Storage Temperature: -20°C ~ 70°C
- Operating Humidity: 5% ~ 95%, non-condensing
- Dimensions: 115mm x 165mm
- Weight: GW:850g / NW:350g
- CE/FCC compliant

Features

- 3.5" SBC with Intel® Jasper Lake platform on-board SoC
- SO-DIMM DDR4 3200 MHz support up to system maximum 32GB
- Triple displays with 2 x HDMI 1.4 1 x DP
- High speed I/O interface for USB 3.2 Gen 2, SATA 6Gb/s
- 3 x 2.5GbE with i225V/LM
- M.2 A Key 2230
- M.2 B key 2242/3042/2280

Dimensions *(Unit: mm)*

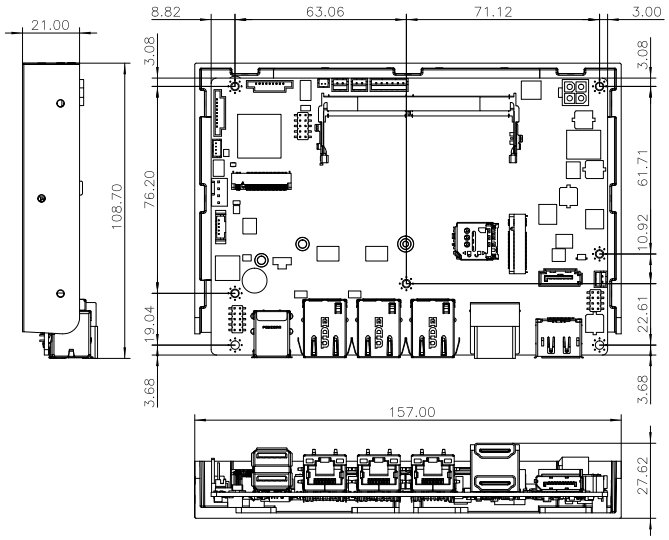

Packing List

1 x WAFER-JL single board computer with Heatspreader	
1 x SATA with power cable kit	1 x QIG (Quick Installation Guide)

Ordering Information

Part No.	Description
WAFER-JL-N1-R10	3.5 SBC supports Intel® 10nm Gen 11 Quad-core Pentium® Silver N6000 3.30GHz TPD 6W on-board SoC with Dual HDMI, DP, triple 2.5 GbE Lan port, USB 3.2 Gen 2, M.2, SATA 6Gb/s, COM, Audio and RoHS, -20°C ~ 60°C
WAFER-JL-N2-R10	3.5 SBC supports Intel® 10nm Gen 11 Quad-core Celeron® N5100 2.80GHz TDP 6W on-board SoC with Dual HDMI, DP, triple 2.5 GbE Lan port, USB 3.2 Gen 2, M.2, SATA 6Gb/s, COM, Audio and RoHS, -20°C ~ 60°C
32000-070301-RS	Dual-port USB 2.0 cable, 210mm, P=2.0
32007-005200-200-RS	Audio cable, 300mm, P=2.0

WAFER-ULT6

3.5 SBC supports Intel® 10nm 11 Generation Core i® ULT on-board SoC with four HDMI, triple 2.5 GbE Lan port , USB 3.1 gen 2, M.2, SATA 6Gb/s, COM, Audio and RoHS, -20°C ~60°C

Preliminary

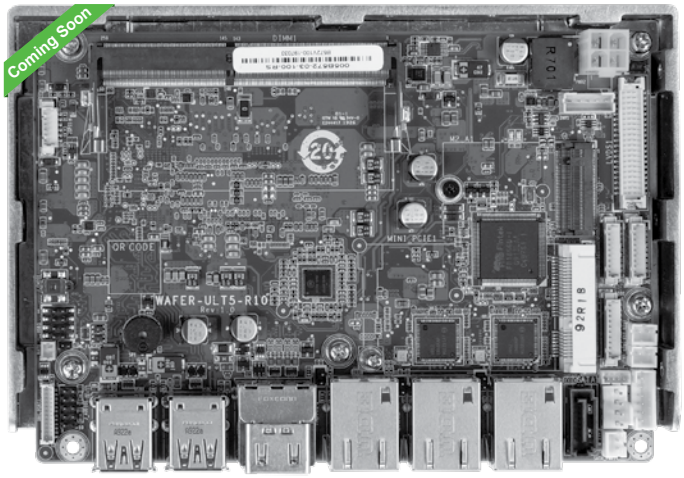

Specifications

- SoC
  Intel® Tirger Lake platform
- BIOS
  AMI UEFI BIOS
- Memory
  One 204-pin 3200 MHz Dual-channel DDR4 SO-DIMMs support up to 64 GB
- Graphics Engine
  Intel® Gen11 UHD Graphics
- Display Output
  Four Independent Displays
  4 x HDMI 1.4 or 3 x HDMI, 1 x LVDS
- Ethernet
  3 x PCIe 2.5 GbE with Intal i225-V
- External I/O Interface
  3 x USB 3.2 Gen 2
- Internal I/O Interface
  1 x SATA 6G/s with 5V SATA power connector (No RAID)
  4 x USB 2.0 front IO
  2 x RS-232/422/485 (1x9 pin, P=1.25) from Super IO
  2 x RS-232 (1x9 pin, P=1.25) from Super IO
- I²C
  1 x I²C (1x4 pin, P=2.0)
- TPM
  1 x On board TPM (2x10 pin) (optinal)
- Audio
  Realtek ALC888S HD Audio codec
- Front Panel
  1 x Power LED & HDD LED (1x6 pin)
  1 x Power button (1x2 pin)
  1 x Reset button (1x2 pin)
- LAN LED
  3 x LAN LED (1x2 pin)
- Expansion
  1 x M.2 A Key for WIFI & BT
  1 x M.2 B Key for 5G
  1 x M.2 M Key for Storage
- Digital I/O
  1 x 8-bit digital I/O (2x5 pin)
- Fan Connector
  1 x System fan connector (1x4 pin)
- Power Supply
  +12V DC input power (AT/ATX mode)
- Watchdog Timer
  Software programmable support 1~255 sec. system reset
- Power Consumption
  TBD
- Operating Temperature
  -20°C ~ 60°C
- Storage Temperature
  -20°C ~ 70°C
- Operating Humidity
  5% ~ 95%, non-condensing
- Dimensions
  115mm x 165mm
- Weight
  GW:850g / NW:350g
- CE/FCC compliant

DDR4 2400 | Fanless | Jumper-less | PCIe GbE | USB 3.0 | SATA 6Gb/s

Features

- 1.3.5" SBC with Intel® Tirger Lake platform on-board SoC
- SO-DIMM DDR4 3200 MHz support up to system maximum 64GB
- Four displays with 4 x HDMI 1.4 or 3 x HDMI 1.4, 1 x LVDS
- High speed I/O interface for USB 3.2 Gen 2, SATA 6Gb/s
- 3 x 2.5GbE with i225-V
- M.2 A Key, B key, M key

Dimensions *(Unit: mm)*



Packing List

1 x WAFER-ULT6 single board computer	1 x Power cable
1 x SATA with power cable kit	1 x QIG

Ordering Information

Part No.	Description
WAFER-ULT6-xx-R10	3.5 SBC supports Intel® 10nm 11 Generation Core i® ULT on-board SoC with four HDMI, triple 2.5 GbE Lan port, USB 3.1 Gen 2, M.2, SATA 6Gb/s, COM, Audio and RoHS, -20°C ~ 60°C
32007-005200-200-RS	Audio cable, 300mm, P=2.0
32000-070301-RS	Dual-port USB 2.0 cable, 210mm, P=2.0

WAFER-ULT5

3.5" SBC supports Intel® 8th Generation Whiskey Lake processor with DDR4 SO-DIMM, Triple display with dual HDMI 1.4, LVDS, Triple GbE, USB 3.1 Gen2, M.2 A key, mPCIe with mSATA support, SATA 6Gb/s, COM and RoHS

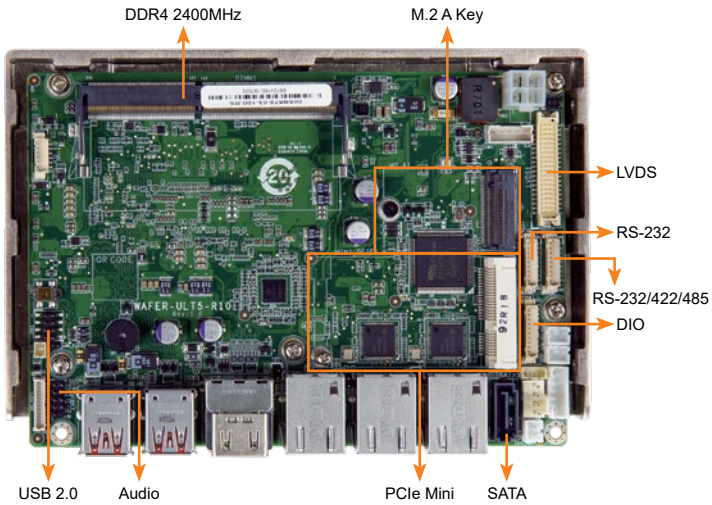



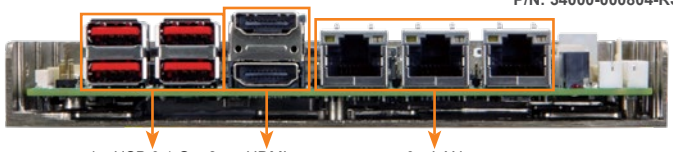

DDR4 2400 | Jumper-less | PCIe GbE | USB 3.1 | SATA 6Gb/s

Specifications

- SoC
  8th generation Intel® mobile ULT Processor
  Intel® Core™ i7-8665UE 1.7 GHz (up to 4.4GHz, Quad-core, 8MB cache, TDP=15W)
  Intel® Core™ i5-8365UE 1.6 GHz (up to 4.1GHz, Quad-core, 6MB cache, TDP=15W)
  Intel® Core™ i3-8145UE 2.2 GHz (up to 3.9GHz, Dual-core, 4MB cache, TDP=15W)
  Intel® Celeron® processor 4305UE (up to 2.0GHz, Dual-core, 2MB cache, TDP=15W)
  Intel® Celeron® processor 4205U (up to 1.8GHz, Dual-core, 2MB cache, TDP=15W)
- BIOS
  AMI UEFI BIOS
- Memory
  1 x DDR4 2400MHz SO-DIMM support up to 32GB
- Graphics Engine
  Intel® UHD Graphics 620
- Display Output
  Triple Independent Displays
  2 x HDMI 1.4 (up to 4096x2160@30Hz)
  1 x LVDS: 18/24-bit dual-channel LVDS by CH7511B DP to LVDS converter (up to 1920x1200@60Hz)
- Ethernet
  2 x Intel® I211AT (colay with I210)
  1 x PCIe GbE LAN Intel i219 Controller
- Embedded Controller
  ITE IT8587VG-FX
- External I/O Interface
  4 x USB 3.1 Gen2
- Internal I/O Interface
  1 x RS-232 (1x9 pin, P=1.25)
  1 x RS-232/422/485 (1x9 pin, P=1.25) (Support Auto Flow Control over RS-485)
  1 x SATA 6G/s with 5V SATA power connector
  2 x USB 2.0 (2x4 pin, P=2.0)
- I²C
  1 x I²C (1x4 pin)
- Audio
  1 x HD audio (2x5 pin, support 7.1 channel HD audio by IEI AC-KIT-888S-R10 kit)
- Front Panel
  1 x Power LED & HDD LED (1x6 pin)
  1 x Power button (1x2 pin)
  1 x Reset button (1x2 pin)
- LAN LED
  3 x LAN LED (1x2 pin)
- Expansion
  1 x Full-size PCIe Mini slot (w/ SATA signal, support mSATA)
  1 x M.2 slot with A Key 2230
- Digital I/O
  1 x 8-bit digital I/O (1x10 pin)
- Fan Connector
  1 x Smart fan connector (1x4 pin)
- Power Supply
  12V DC input
  1 x Internal power connector (2x2 pin)
  Support AT/ATX mode
- Watchdog Timer
  Software programmable support 1~255 sec. system reset
- Power Consumption
  12V@3.38A (Intel® Core™ i7-8665UE up to 1.7GHz CPU with 16GB 2666MHz DDR4 memory)
- Operating Temperature
  -20°C ~ 60°C
- Storage Temperature
  -30°C ~ 70°C
- Operating Humidity: 5% ~ 95%, non-condensing
- Dimensions: 146mm x 102mm
- Weight: GW: 700g / NW: 350g

Features

- 3.5'' SBC supports Intel® 8th generation Whiskey Lake processor with DDR4 SO-DIMMs
- Triple display with dual HDMI, LVDS selection
- M.2 A Key, PCIe Mini slot with mSATA spport
- COM, USB 3.1 Gen2, SATA 6Gb/s support
- Support temperature operation: -20°C ~ 60°C
- Support Auto Flow Control over RS-485

Dimensions *(Unit: mm)*

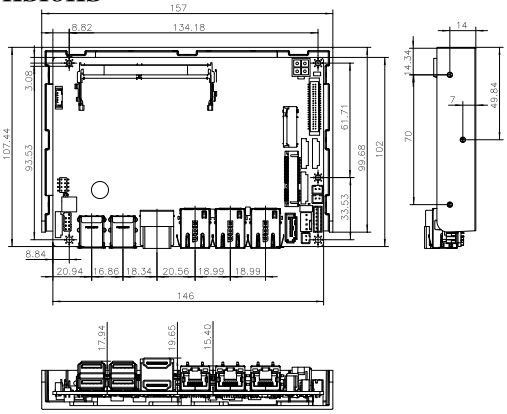

Packing List

1 x WAFER-ULT5 single board computer with Heatspreader	
1 x Power cable	1 x SATA with power cable kit
2 x RS-232/422/485 cable	1 x QIG (Quick Installation Guide)

Ordering Information

Part No.	Description
WAFER-ULT5-i7-R10	3.5" SBC supports Intel® 8th Generation Core™ i7-8665UE with DDR4 SO-DIMM, triple display with dual HDMI 1.4, LVDS, Triple GbE, USB 3.1, M.2 A key, mPCIe with mSATA support, SATA 6Gb/s, COM and RoHS
WAFER-ULT5-i5-R10	3.5" SBC supports Intel® 8th Generation Core™ i5-8365UE with DDR4 SO-DIMM, triple display with dual HDMI 1.4, LVDS, Triple GbE, USB 3.1, M.2 A key, mPCIe with mSATA support, SATA 6Gb/s, COM and RoHS
WAFER-ULT5-i3-R10	3.5" SBC supports Intel® 8th Generation Core™ i3-8145UE with DDR4 SO-DIMM, triple display with dual HDMI 1.4, LVDS, Triple GbE, USB 3.1, M.2 A key, mPCIe with mSATA support, SATA 6Gb/s, COM and RoHS
WAFER-ULT5-C-R10**	3.5" SBC supports Intel® 8th Generation Celeron® 4305UE with DDR4 SO-DIMM, triple display with dual HDMI 1.4, LVDS, Triple GbE, USB 3.1, M.2 A key, mPCIe support, SATA 6Gb/s, COM and RoHS
WAFER-ULT5-CE-R10	3.5" SBC supports Intel® 8th Generation Celeron® 4205U with DDR4 SO-DIMM, triple display with dual HDMI 1.4, LVDS, Triple GbE, USB 3.1, M.2 A key, mPCIe support, SATA 6Gb/s, COM and RoHS
32005-003500-200-RS	Round cable, RS-232/422/485, RS-232 cable, 2, 250mm, 26AWG, (A) D-SUB 9P MALE+HEXAGONAL screw, (B) MOLEX 51021-0900 P=1.25, Wins Precision, RoHS
32801-000201-300-RS	SATA cable, 3, 150mm, 26AWG, SATA 7+15P female 180°, SATA 7P female 180°+LOCK, JST PHR-2 P=2.0, one pcs PKG w/ label, Wins Precision, RoHS

**By order production, MOQ: 100

WAFER-AL

3.5" SBC supports Intel® 14nm Generation Pentium® or Celeron® on-board SoC with DP++/VGA/LVDS/iDP support, Dual PCIe GbE, USB 3.2 Gen 1 (5Gb/s), PCIe Mini with mSATA support, SATA 6Gb/s, COM, Audio and RoHS

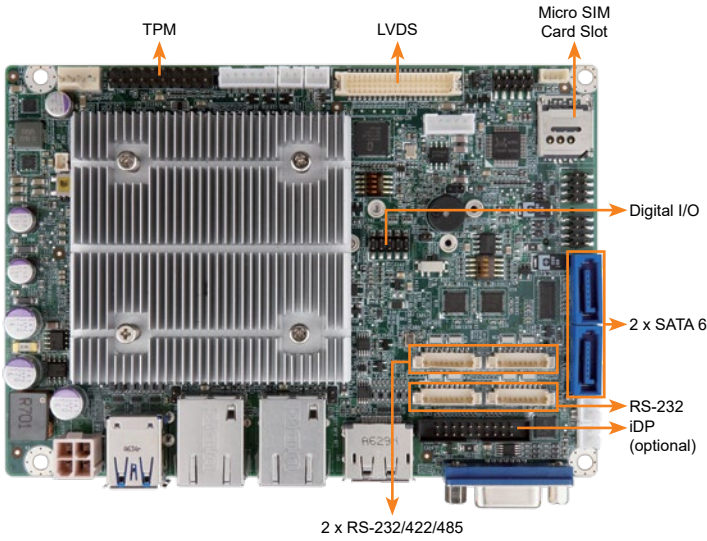

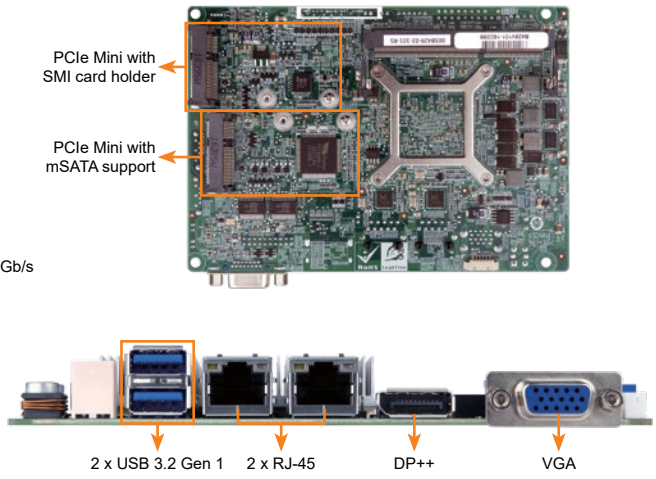

Specifications

- SoC
  Intel® Pentium® N4200 on-board SoC (up to 2.5GHz, quad-core, 2M Cache, TDP=6W)
  Intel® Celeron® N3350 on-board SoC (up to 2.4GHz, dual-core, 2M Cache, TDP=6W)
- BIOS
  AMI UEFI BIOS
- Memory
  One 204-pin 1866/1600MHz Single-channel DDR3L DIMMs support up to 8GB
- Graphics Engine
  Intel® HD Graphics Gen9 Low Power; 18 Execution Units
  4K Codec Decode & Encode for HEVC 4, H.264, VP8, SVC, MVC
- Display Output
  Triple independent display
  1 x DP++ (up to 4096x2160@60Hz)
  1 x VGA (up to 1920x1200@60Hz)
  1 x LVDS: 18/24-bit dual-channel LVDS (up to 1920x1200@60Hz)
  1 x iDP (colay with VGA, support by request)
- Ethernet
  2 x PCIe GbE LAN Realtek RTL8111 Controller
- External I/O Interface
  2 x USB 3.2 Gen 1 (5Gb/s)
- Internal I/O Interface
  2 x RS-232 (1x9 pin, P=1.25)
  2 x RS-232/422/485 (1x9 pin, P=1.25)
  2 x SATA 6Gb/s with 5V SATA power connector (no RAID)
  4 x USB 2.0 (2x4 pin, P=2.0)
- SMBus/I²C
  1 x SMBus (1x4 pin, P=2.0)
- TPM
  1 x TPM (2x10 pin)
- Audio
  Realtek ALC888S HD Audio codec
  1 x Front audio (2x5 pin)
- Front Panel
  1 x Power LED & HDD LED (1x6 pin)
  1 x Power button (1x2 pin)
  1 x Reset button (1x2 pin)
- LAN LED
  2 x LAN LED (1x2 pin)
- Expansion
  1 x Full/Half-size PCIe Mini slot (supports mSATA, colay with SATA port 2)
  1 x Full/Half-size PCIe Mini slot (supports SIM card holder)
- Digital I/O
  1 x 8-bit digital I/O (2x5 pin)
- Fan Connector
  1 x System fan connector (1x4 pin)
- Power supply
  +12V DC input power (AT/ATX mode)
- Watchdog Timer
  Software programmable, supports 1~255 sec. system reset
- Power Consumption
  12V@2.57A (Intel® Pentium® N4200 up to 2.5GHz with 8GB DDR3L memory)
- Operating Temperature: -20°C ~ 70°C
- Storage Temperature: -20°C ~ 70°C
- Operating Humidity: 5% ~ 95%, non-condensing
- Dimensions: 146mm x 102mm
- Weight: 600g / NW: 250g
- CE/FCC compliant

New Intel® Apollo Lake platform solution for entry level system







TPM 2.0 Support



Features

- 3.5" SBC with Intel® Apollo Lake platform on-board SoC
- One SO-DIMM DDR3L 1867/1600MHz support up to system maximum 8GB
- Triple displays with 1 x DP++, 1 x VGA / 1 x iDP, 1 x LVDS selection
- High speed I/O interface for USB 3.2 Gen 1 (5Gb/s), SATA 6Gb/s
- PCIe Mini with mSATA support

Packing List

1 x WAFER-AL single board computer	
1 x Power cable	1 x SATA with power cable kit
1 x RS-232/422/485 cable	1 x QIG

Ordering Information

Part No.	Description
WAFER-AL-N2-R10	3.5" SBC supports Intel® 14nm quad-core Pentium® N4200 2.5GHz on-board SoC with tripple display, Dual PCIe GbE, PCIe Mini with mSATA support, USB 3.2 Gen 1 (5Gb/s), SATA 6Gb/s, COM, Audio and RoHS
WAFER-AL-N1-R10	3.5" SBC supports Intel® 14nm dual-core Celeron® N3350 2.4GHz on-board SoC with tripple display, Dual PCIe GbE, PCIe Mini with mSATA support, USB 3.2 Gen 1 (5Gb/s), SATA 6Gb/s, COM, Audio and RoHS
WAFER-AL-Nx-iDP-R10**	3.5" SBC supports Intel® 14nm quad-core Pentium® N4200/ Celeron® N3350 on-board SoC with iDP, DP++, LVDS tripple display, Dual PCIe GbE, USB 3.2 Gen 1 (5Gb/s), PCIe Mini with mSATA support, SATA 6Gb/s, COM, Audio and RoHS
32001-008600-200-RS	Dual-port USB 2.0 cable, 210mm, P=2.0
32005-003500-200-RS	RS-232/422/485 cable, 250mm, P=1.25
32007-005200-200-RS	Audio cable, 300mm, P=2.0
TPM-IN02-R20	20-pin Infineon TPM 2.0 module, software management tool, firmware v5.5

**By order production, MOQ: 100

WAFER-ULT3/ULT4

3.5" SBC supports Intel® 6th/7th Generation ULT Processor with DDR4 SO-DIMM/On-board Memory Support, Triple Display, PCIe Mini with SIM Card Slot/mSATA Support, SATA 6Gb/s, COM, Audio, and RoHS

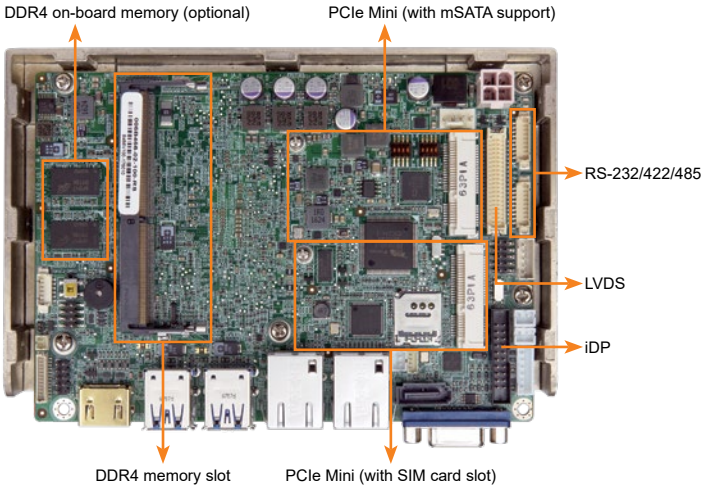

Passenger information system for transportation



34000-000673-RS
Fanless heatsink module (optional)

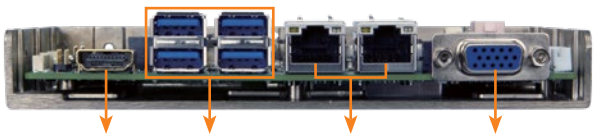



Specifications

- CPU
  7th generation Intel® mobile ULT processor
  Intel® Core™ i7-7600U (up to 3.9GHz, dual-core, 4MB cache, TDP=15W)
  Intel® Core™ i5-7300U (up to 3.5GHz, dual-core, 3MB cache, TDP=15W)
  Intel® Core™ i3-7100U (up to 2.4GHz, dual-core, 3MB cache, TDP=15W)
  6th generation Intel® mobile ULT processor
  Intel® Core™ i7-6600U (up to 3.4GHz, dual-core, 4MB cache, TDP=15W)
  Intel® Core™ i5-6300U (up to 3.0GHz, dual-core, 3MB cache, TDP=15W)
  Intel® Core™ i3-6100U (up to 2.3GHz, dual-core, 3MB cache, TDP=15W)
  Intel® Celeron® processor 3955U (up to 2.0GHz, dual-core, 2MB cache, TDP=15W)
- BIOS
  AMI UEFI BIOS
- Memory
  1 x 260-pin 2133MHz DDR4 SDRAM SO-DIMM (channel 1, supports up to 16GB)
  On-board 4GB DDR4 memory (channel 2, optional support by request)
- Graphics Engine
  Intel® HD Graphics
- Display Output
  Triple independent display
  1 x VGA (up to 1920x1200@60Hz)
  1 x HDMI (up to 4096x2160@30Hz)
  1 x 18/24-bit dual-channel LVDS (up to 1920x1200@60Hz)
  1 x iDP interface for HDMI, LVDS, VGA, DVI, DP (co-layout with VGA)
- Ethernet
  1 x Intel® I219LM
  1 x Intel® I211AT
- External I/O Interface
  4 x USB 3.2 Gen 1 (5Gb/s)
- Internal I/O Interface
  1 x SATA 6Gb/s with 5V SATA power connector
  2 x USB 2.0 (2x4 pin, P=2.0)
  2 x RS-232/422/485 (1x9 pin, P=1.25)
- SMBus
  1 x SMBus (1x4 pin, P=2.0)
- Audio
  1 x HD audio (2x5 pin, support 7.1 channel HD audio by IEI AC-KIT-888S-R10 kit)
- Front Panel
  1 x Power LED & HDD LED (1x6 pin)
  1 x Power button (1x2 pin)
  1 x Reset button (1x2 pin)
- Expansion
  1 x Full-size PCIe Mini slot (w/ SATA signal, supports mSATA)
  1 x Full-size PCIe Mini slot (w/ SIM card slot support)
- Digital I/O
  1 x 8-bit digital I/O (2x5 pin)
- Fan Connector
  1 x System fan connector (1x4 pin)
- Watchdog Timer
  Software programmable, supports 1~255 sec. system reset
- Power Supply
  12V only DC input
  1 x Internal power connector (2x2 pin, or optional terminal block)
- Power Consumption
  12V@4.27A (Intel® Core™ i7-6600U up to 3.4GHz CPU with 16GB 2133MHz DDR4 memory running in 3.0GHz)
- Operating Temperature: -20°C ~ 60°C
- Storage Temperature: -30°C ~ 70°C
- Operating Humidity: 5% ~ 95%, non-condensing
- Dimensions: 146mm x 102mm
- Weight: GW: 600g / NW: 250g
- CE/FCC compliant

Features

- 3.5" SBC with Intel® 6th/7th Generation ULT processor supports DDR4 SO-DIMM (on-board memory support by request)
- Triple display with VGA/iDP, HDMI and LVDS selection
- Two PCIe Mini with mSATA/SIM card slot support
- Intel® GbE LAN with Intel® AMT 11.0 supported

Packing List

1 x WAFER-ULT3/ULT4 single board computer (heat spreader by default)	
1 x Power cable	1 x SATA with power cable kit
1 x RS-232/422/485 cable	1 x QIG

Ordering Information

Part No.	Description
WAFER-ULT3-i7-R10	3.5" SBC supports Intel® 6th Generation ULT Core™ i7-6600U processor with DDR4 SO-DIMM, triple display with VGA/iDP, HDMI, LVDS, Dual GbE, PCIe Mini with SIM card slot/mSATA support, SATA 6Gb/s, COM and RoHS
WAFER-ULT3-i5-R10	3.5" SBC supports Intel® 6th Generation ULT Core™ i5-6300U processor with DDR4 SO-DIMM, triple display with VGA/iDP, HDMI, LVDS, Dual GbE, PCIe Mini with SIM card slot/mSATA support, SATA 6Gb/s, COM and RoHS
WAFER-ULT3-i3-R10	3.5" SBC supports Intel® 6th Generation ULT Core™ i3-6100U processor with DDR4 SO-DIMM, triple display with VGA/iDP, HDMI, LVDS, Dual GbE, PCIe Mini with SIM card slot/mSATA support, SATA 6Gb/s, COM and RoHS
WAFER-ULT3-C-R10	3.5" SBC supports Intel® 6th Generation ULT Celeron® 3955U processor with DDR4 SO-DIMM, triple display with VGA/iDP, HDMI, LVDS, Dual GbE, PCIe Mini with SIM card slot/mSATA support, SATA 6Gb/s, COM and RoHS
WAFER-ULT4-i7-R10**	3.5" SBC supports Intel® 7th Generation ULT Core™ i7-7600U processor with DDR4 SO-DIMM, triple display with VGA/iDP, HDMI, LVDS, Dual GbE, PCIe Mini with SIM card slot/mSATA support, SATA 6Gb/s, COM and RoHS
WAFER-ULT4-i5-R10	3.5" SBC supports Intel® 7th Generation ULT Core™ i5-7300U processor with DDR4 SO-DIMM, triple display with VGA/iDP, HDMI, LVDS, Dual GbE, PCIe Mini with SIM card slot/mSATA support, SATA 6Gb/s, COM and RoHS
WAFER-ULT4-i3-R10**	3.5" SBC supports Intel® 7th Generation ULT Core™ i3-7100U processor with DDR4 SO-DIMM, triple display with VGA/iDP, HDMI, LVDS, Dual GbE, PCIe Mini with SIM card slot/mSATA support, SATA 6Gb/s, COM and RoHS
32001-008600-200-RS	Dual-port USB 2.0 cable, 210mm, P=2.0
32005-003500-200-RS	RS-232/422/485 cable, 250mm, P=1.25
34000-000673-RS	Optional fanless heatsink module, 146mm x 102mm x 16mm

**By order production, MOQ:100

WAFER-BW

3.5" SBC with Intel® 14nm Pentium®/Celeron® on-board SoC with Dual HDMI and LVDS, Dual PCIe GbE, USB 3.2 Gen 1 (5Gb/s), PCIe Mini, SATA 6Gb/s, mSATA, COM, Audio and RoHS

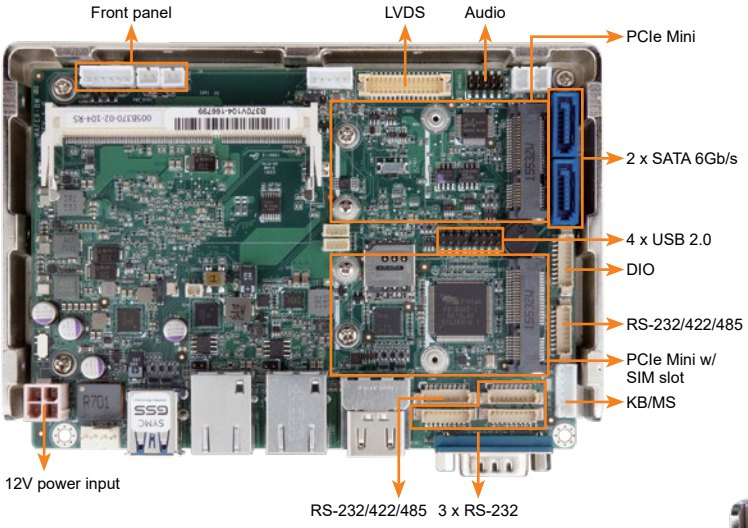

Triple independent display

(Dual HDMI and one 18/24-bit dual-channel LVDS)



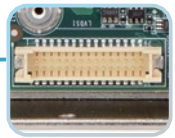

LVDS

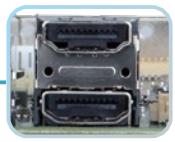

HDMI

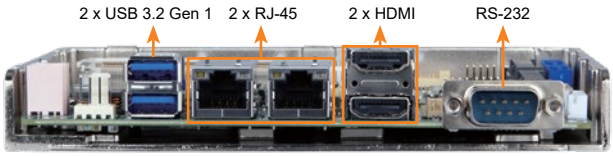



Specifications

- SoC
  Intel® Pentium® N3710 on-board SoC (up to 2.56GHz, quad-core, 2MB cache, TDP=6W)
  Intel® Celeron® N3160 on-board SoC (up to 2.24GHz, quad-core, 2MB cache, TDP=6W)
  Intel® Celeron® N3060 on-board SoC (up to 2.48GHz, dual-core, 2MB cache, TDP=6W)
  Intel® Celeron® N3010 on-board SoC (up to 2.24GHz, dual-core, 2MB cache, TDP=4W)
- BIOS
  AMI UEFI BIOS
- Memory
  One 204-pin 1600/1333 MHz single-channel DDR3L SDRAM unbuffered SO-DIMM slot supports up to 8 GB
- Graphics Engine
  Intel® HD Graphics Gen 8 Engine with 16 low-power execution units, supporting DX11.1, OpenGL 4.2 and OpenCL1.2
- Display Output
  Triple independent display
  2 x HDMI (up to 3840x2160@30Hz)
  1 x 18/24-bit dual-channel LVDS (up to 1920x1200@60Hz)
- Ethernet
  LAN1: Realtek RTL8111GN
  LAN2: Realtek RTL8111GN
- External I/O Interface
  1 x RS-232
  2 x USB 3.2 Gen 1 (5Gb/s) (on rear I/O)
- Internal I/O Interface
  1 x eMMC4.51 (optional)
  1 x KB/MS (1x6 pin)
  1 x mSATA
  2 x SATA 6Gb/s with 5V SATA power connector (no RAID)
  3 x RS-232 (1x9 pin, P=1.25)
  4 x USB 2.0 (2x4 pin, P=2.0)
  2 x RS-232/422/485 (2 by pin header) (1x9 pin, P=1.25)
- SMBus
  1 x SMBus (1x4 pin)
- I²C
  1 x I²C (1x4 pin)
- Audio
  Realtek ALC888S HD Audio codec
  1 x Front audio (2x5 pin)
- Front Panel
  1 x Power LED & HDD LED (1x6 pin)
  1 x Power button (1x2 pin)
  1 x Reset button (1x2 pin)
- LAN LED
  2 x LAN LED (1x2 pin)
- Expansion
  1 x Full/Half-size PCIe Mini slot (with SIM card holder)
  1 x Full/Half-size PCIe Mini slot (supports mSATA, colay with SATA port 2)
- Digital I/O: 8-bit digital I/O (1x10 pin, P=1.25)
- Fan Connector
  1 x Smart fan connector (1x4 pin)
- Power Supply
  12V only DC input
  1 x Internal power connector (2x2 pin)
  Support AT/ATX mode
- Power Consumption
  12V@1.52A (Intel® Pentium® processor N3710 with 8 GB 1600 MHz DDR3L memory)
- Watchdog Timer: Software programmable supports 1~255 sec. system reset
- Operating Temperature: -20°C ~ 60°C
- Storage Temperature: -30°C ~ 70°C
- Operating Humidity: 5% ~ 95%, non-condensing
- Dimensions: 146mm x 102mm
- Weight: GW: 600g/ NW: 250g
- CE/FCC compliant

Features

- 3.5" SBC supports Intel® 14nm Pentium®/Celeron® on-board SoC
- Triple independent display support
- 1.35V DDR3L 1333/1600 MHz SDRAM up to 8 GB
- COM, USB 3.2 Gen 1 (5Gb/s), SATA 6Gb/s, PCIe Mini, mSATA and Audio support
- Two full-size PCIe Mini slots (one with SIM holder for WLAN/WWAN expansion)

Packing List

1 x WAFER-BW single board computer	
1 x Audio cable	
1 x Power cable	2 x SATA with power cable kit
1 x RS-232/422/485 cable	1 x QIG

Ordering Information

Part No.	Description
WAFER-BW-N4-R21	3.5" SBC supports Intel® Pentium® quad-core processor N3710 up to 2.56GHz (6W) with dual HDMI and LVDS, Dual PCIe GbE, PCIe Mini, USB 3.2 Gen 1 (5Gb/s), SATA 6Gb/s, mSATA, COM, Audio and RoHS
WAFER-BW-N3-R21	3.5" SBC supports Intel® Celeron® quad-core processor N3160 up to 2.24GHz (6W) with dual HDMI and LVDS, Dual PCIe GbE, PCIe Mini, USB 3.2 Gen 1 (5Gb/s), SATA 6Gb/s, mSATA, COM, Audio and RoHS
WAFER-BW-N2-R21	3.5" SBC supports Intel® Celeron® dual-core processor N3060 up to 2.48GHz (6W) with dual HDMI and LVDS, Dual PCIe GbE, PCIe Mini, USB 3.2 Gen 1 (5Gb/s), SATA 6Gb/s, mSATA, COM, Audio and RoHS
WAFER-BW-N1-R21**	3.5" SBC supports Intel® Celeron® dual-core processor N3010 up to 2.24GHz (4W) with dual HDMI and LVDS, Dual PCIe GbE, PCIe Mini, USB 3.2 Gen 1 (5Gb/s), SATA 6Gb/s, mSATA, COM, Audio and RoHS
32001-008600-200-RS	Dual-port USB 2.0 cable, 210mm, P=2.0
32006-001100-201-RS	PS/2 KB/MS cable, 135mm/110mm, P=2.0
32005-003500-200-RS	RS-232/422/485 cable, 250mm, P=1.25

**By order production, MOQ: 100

WAFER-ULT2-i1 / WAFER-ULT-i1

3.5" SBC supports Intel® 22nm 4th/14nm 5th Generation Mobile Core™ i7/ i5/i3 and Celeron® on-board Processor (ULT), VGA/LVDS/iDP, Dual GbE, PCIe Mini, USB 3.2 Gen 1 (5Gb/s), SATA 6Gb/s Audio, iRIS-1010 and RoHS

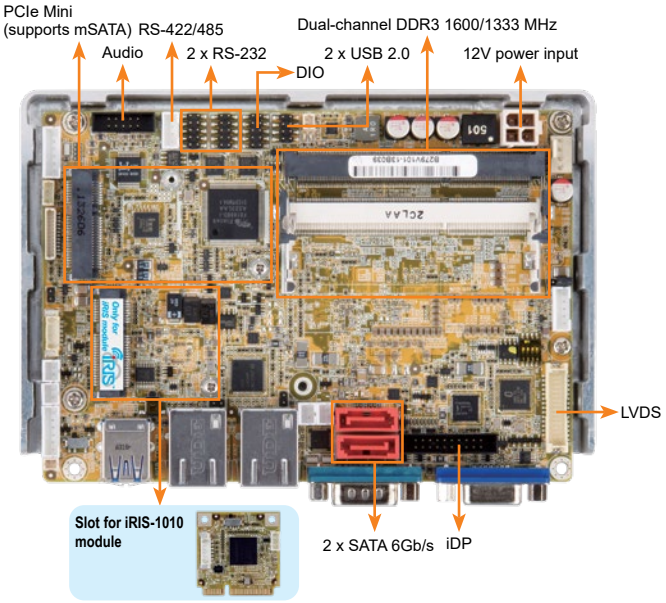

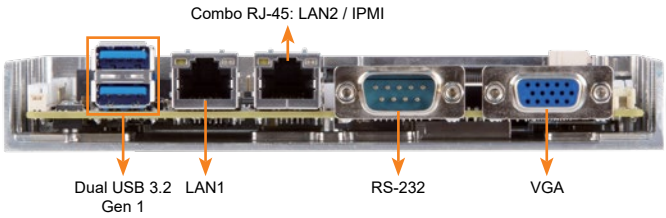

IPMI 2.0 Compliant

1.35V DDR3L | Heat Spreader | USB 2.0 | SATA 6Gb/s | PCIe GbE | mSATA

Specifications

- CPU
  - » 5th generation Intel® mobile ULT on-board SoC
    - Intel® Core™ i7-5650U (2.2GHz, dual-core, 4MB cache, TDP=15W)
    - Intel® Core™ i5-5350U (1.8GHz, dual-core, 3MB cache, TDP=15W)
    - Intel® Core™ i3-5010U (2.1GHz, dual-core, 3MB cache, TDP=15W)
    - Intel® Celeron® processor 3765U (1.9GHz, dual-core, 2MB cache, TDP=15W)
  - » 4th generation Intel® mobile ULT on-board SoC
    - Intel® Core™ i5-4300U (1.9GHz, dual-core, 3MB cache, TDP=15W)
    - Intel® Core™ i3-4010U (1.7GHz, dual-core, 3MB cache, TDP=15W)
- BIOS: UEFI BIOS
- Memory
  - Two 204-pin 1600/1333 MHz dual-channel DDR3L SDRAM SO-DIMM slots support up to 16 GB
- Graphics Engine
  - Intel® HD Graphics Gen 7.5 supports DX11.1, OpenGL 4.2 and OpenCL1.2 Full MPEG2, VC1, AVC decode (4th generation SoC)
  - Intel® HD Graphics Gen 8 supports DX11.1, OpenGL 4.2 and OpenCL1.2 Full MPEG2, VC1, AVC decode (5th generation SoC)
- Display Output
  - Triple independent display
  - 1 x VGA (up to 2560x1600@60 Hz)
  - 1 x 18/24-bit dual-channel LVDS (up to 1920x1200@60Hz)
  - 1 x iDP interface for HDMI, LVDS, VGA, DVI, DP (up to 3840x2160@60 Hz)
- Ethernet
  - LAN1: Intel® I218LM PHY with Intel® AMT 9.0 support
  - LAN2: Intel® I210-AT PCIe controller with NCSI support
- External I/O Interfaces
  - 2 x USB 3.2 Gen 1 (5Gb/s)
  - 1 x RS-232
- Internal I/O Interfaces
  - 1 x KB/MS (1x6 pin)
  - 1 x RS-422/485 (1x4 pin, P=2.0)
  - 2 x SATA 6Gb/s with 5V power connector
  - 2 x USB 2.0 (2x4 pin, P=2.0)
  - 2 x RS-232 (2x5 pin, P=2.0)
- iRIS Remote Management Module
  - 1 x iRIS-1010 slot
- Expansion: 1 x Full-size PCIe Mini card slot (mSATA support)
- Audio
  - Realtek ALC888S HD Audio codec
  - 1 x audio (2x5 pin)
- Front Panel
  - 1 x Power LED & HDD LED (1x6 pin)
  - 1 x Power button (1x2 pin)
  - 1 x Reset button (1x2 pin)
- LAN LED: 2 x LAN LED (1x2 pin)
- Digital I/O: 8-bit digital I/O (2x5 pin)
- Fan Connector: 1 x System smart fan (1x4 pin)
- Watchdog Timer: Software programmable, support 1~255 sec. system reset
- Power Supply
  - 12V only DC input
  - 1 x Internal power connector (2x2 pin)
  - Support AT/ATX mode
- Power Consumption
  - 12V@2.72A (Intel® Core™ i5-4300U CPU with two 8 GB 1600 MHz DDR3 memory)
- Operating Temperature: -10°C ~ 60°C
- Storage Temperature: -20°C ~ 70°C
- Operating Humidity: 5% ~ 95%, non-condensing
- Dimensions: 146mm x 102mm
- Weight: GW: 600g/ NW: 250g
- CE/FCC compliant

Features

- 3.5" form fator with 4th/5th generation Intel® ULT SoC supports dual-channel DDR3L SO-DIMMs
- 12V only single voltage design with AT/ATX mode support
- 18/24-bit dual-channel LVDS support
- Support triple independent display via LVDS, VGA and iDP
- Support PCIe Mini card slot for mSATA, 3G card, wireless card and DOM

Packing List

1 x WAFER-ULT/ULT2 single board computer with heatsink enclosure	
1 x Audio cable	
1 x Dual-port USB 2.0 cable	2 x SATA with 5V output cable kit
1 x Power cable	1 x QIG

Ordering Information

Part No.	Description
WAFER-ULT2-i1-i7-R12	3.5" SBC with Intel® 14nm 5th Generation ULT Mobile Core™ i7-5650U processor (ULT), VGA/LVDS/iDP, Dual GbE, PCIe Mini, USB 3.2 Gen 1 (5Gb/s), SATA 6Gb/s and iRIS
WAFER-ULT2-i1-i5-R12	3.5" SBC with Intel® 14nm 5th Generation ULT Mobile Core™ i5-5350U processor (ULT), VGA/LVDS/iDP, Dual GbE, PCIe Mini, USB 3.2 Gen 1 (5Gb/s), SATA 6Gb/s and iRIS
WAFER-ULT2-i1-i3-R12	3.5" SBC with Intel® 14nm 5th Generation ULT Mobile Core™ i3-5010U processor (ULT), VGA/LVDS/iDP, Dual GbE, PCIe Mini, USB 3.2 Gen 1 (5Gb/s), SATA 6Gb/s and iRIS
WAFER-ULT2-i1-C-R12	3.5" SBC with Intel® 14nm 5th Generation ULT Mobile Celeron® 3765U processor (ULT), VGA/LVDS/iDP, Dual GbE, PCIe Mini, USB 3.2 Gen 1 (5Gb/s), SATA 6Gb/s and iRIS
WAFER-ULT-i1-i5-R12	3.5" SBC supports Intel® 22nm 4th Generation Mobile Core™ i5-4300U processor (ULT), VGA/LVDS/iDP, Dual GbE, USB 3.2 Gen 1 (5Gb/s), PCIe Mini, SATA 6Gb/s Audio, iRIS-1010 and RoHS
WAFER-ULT-i1-i3-R12	3.5" SBC supports Intel® 22nm 4th Generation Mobile Core™ i3-4010U processor (ULT), VGA/LVDS/iDP, Dual GbE, PCIe Mini, USB 3.2 Gen 1 (5Gb/s), SATA 6Gb/s Audio, iRIS-1010 and RoHS
iRIS-1010-R10	IPMI 2.0 adapter card with AST1010 BMC chip (w/o KVM over IP function) for PCIe Mini socket interface
19800-000300-200-RS	RS-232 cable, 300mm, P=2.0
32006-001100-201-RS	PS/2 KB/MS cable, 135mm/110mm, P=2.0
32205-003800-300-RS	RS-422/485 cable, 200mm, P=2.0
DP-DP-R10	DisplayPort to DisplayPort converter board (for IEI iDP connector)
DP-DVI-R10	DisplayPort to DVI-D converter board (for IEI iDP connector)
DP-HDMI-R10	DisplayPort to HDMI converter board (for IEI iDP connector)
DP-LVDS-R10	DisplayPort to LVDS converter board (for IEI iDP connector)
DP-VGA-R10	DisplayPort to VGA converter board (for IEI iDP connector)

WAFER-BT-E38001W2

3.5" SBC with Intel® 22nm Atom™ SoC, -40°C ~ 85°C, VGA/LVDS/iDP, Dual PCIe GbE, USB 3.2 Gen 1 (5Gb/s), PCIe Mini, SATA 3Gb/s, mSATA, COM, Audio and RoHS

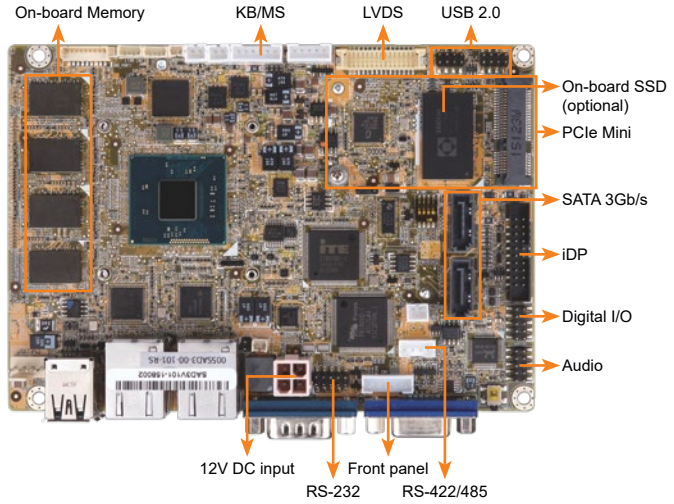

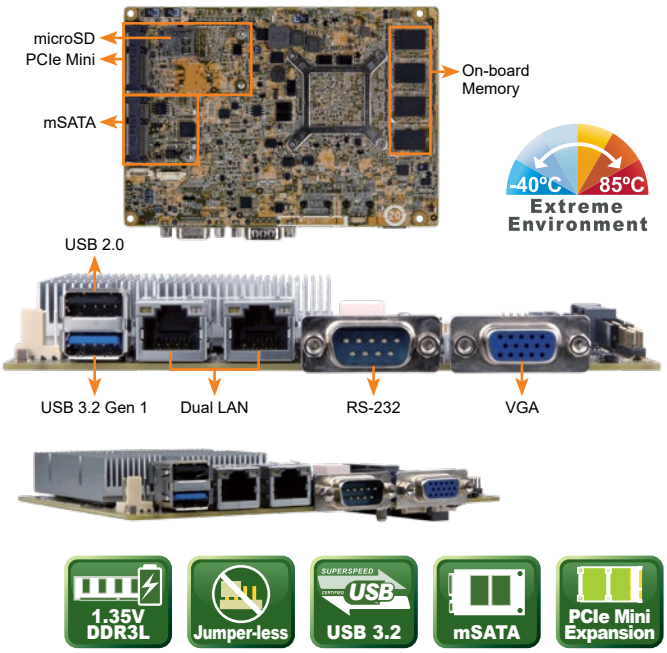

Specifications

- SoC
  Intel® Atom™ E3845 on-board SoC (1.91GHz, quad-core, 2MB cache, TDP=10W)
  Intel® Atom™ E3827 on-board SoC (1.75GHz, dual-core, 1MB cache, TDP=8W)
  Intel® Atom™ E3826 on-board SoC (1.46GHz, dual-core, 1MB cache, TDP=7W)
  Intel® Atom™ E3815 on-board SoC (1.46GHz, single-core, 512KB cache, TDP=5W)
- BIOS
  UEFI BIOS
- Memory
  4 GB solder-down 1066/1333 MHz DDR3L memory (for E3845)
- Graphics
  Intel® HD Graphics Gen 7 Engine with 4 execution units, supporting DX11.1, OpenGL 4.2 and OpenCL1.2
- Display Output
  Dual independent dispaly
  1 x VGA (up to 2560x1600@60Hz)
  1 x 18/24-bit dual-channel LVDS (up to 1920x1200@60Hz)
  1 x iDP interface for HDMI, LVDS, VGA, DVI, DP (up to 2560x1600@60Hz)
- Ethernet
  LAN1: Intel® I210-IT PCIe controller
  LAN2: Intel® I210-IT PCIe controller
- External I/O Interface
  1 x RS-232
  1 x USB 2.0
  1 x USB 3.2 Gen 1 (5Gb/s)
- Internal I/O Interface
  1 x PS/2 KB/MS (1x6 pin)
  4 x USB 2.0 (2x4 pin, P=2.0)
  2 x SATA 3Gb/s with 5V SATA power connector (no RAID)
  1 x RS-232 (2x5 pin, P=2.0)
  1 x RS-422/485 (1x4 pin, P=2.0)
- Expansion
  2 x Full-size PCIe Mini slot
- Audio
  Realtek ALC888S HD Audio codec
  1 x Front audio (2x5 pin)
- Storage
  On-board SSD 4 GB colay SATA port 1 (optional)
  1 x mSATA colay SATA port 2
  1 x microSD socket
- Front Panel
  1 x Power LED & HDD LED (1x6 pin)
  1 x Power button (1x2 pin)
  1 x Reset button (1x2 pin)
- SMBus: 1 x SMBus (1x4 pin)
- I²C: 1 x I²C (1x4 pin)
- LAN LED: 2 x LAN LED (1x2 pin)
- Digital I/O: 8-bit digital I/O (2x5 pin)
- Fan Connector
  1 x Smart fan connector (1x4 pin)
- Watchdog Timer: Software programmable supports 1~255 sec. system reset
- Power Supply
  12V only DC input
  1 x Internal power connector (2x2 pin)
  Support AT/ATX mode
- Power Consumption
  12V@1.32A (Intel® Atom™ processor E3845 with on-board 2 GB 1333 MHz DDR3L memory)
- Operating Temperature: -40°C ~ 85°C
- Storage Temperature: -40°C ~ 85°C
- Operating Humidity: 5% ~ 95%, non-condensing
- Dimensions: 146mm x 102mm
- Weight: GW: 600g / NW: 250g
- CE/FCC compliant

Features

- 3.5" SBC supports Intel® 22nm Atom™ on-board SoC
- Dual independent display support
- On-board 2 GB/4 GB 1066/1333 MHz DDR3L memory
- COM, USB 3.2 Gen 1 (5Gb/s), SATA 3Gb/s, PCIe Mini, mSATA and Audio support
- Supports -40°C ~ 85°C

Packing List

1 x WAFER-BT single board computer	1 x SATA with power cable kit
1 x Power cable	1 x QIG

Ordering Information

Part No.	Description
WAFER-BT-E38451W2-R12	3.5" SBC with Intel® 22nm Atom™ quad-core E3845 1.91GHz (10W) on-board SoC supports -40°C ~ 85°C, 4 GB DDR3 memory on board, VGA/LVDS/iDP, Dual PCIe GbE, USB 3.2 Gen 1 (5Gb/s), PCIe Mini, SATA 3Gb/s, mSATA, COM, Audio and RoHS
WAFER-BT-E38271W2-R12**	3.5" SBC with Intel® 22nm Atom™ dual-core E3827 1.75GHz (8W) on-board SoC supports -40°C ~ 85°C, 2 GB DDR3 memory on board, VGA/LVDS/iDP, Dual PCIe GbE, PCIe Mini, USB 3.2 Gen 1 (5Gb/s), SATA 3Gb/s, mSATA, COM, Audio and RoHS
WAFER-BT-E38261W2-R12**	3.5" SBC with Intel® 22nm Atom™ dual-core E3826 1.46GHz (7W) on-board SoC supports -40°C ~ 85°C, 2 GB DDR3 memory on board, VGA/LVDS/iDP, Dual PCIe GbE, PCIe Mini, USB 3.2 Gen 1 (5Gb/s), SATA 3Gb/s, mSATA, COM, Audio and RoHS
WAFER-BT-E38151W2-R12**	3.5" SBC with Intel® 22nm Atom™ single-core E3815 1.46GHz (5W) on-board SoC supports -40°C ~ 85°C, 2 GB DDR3 memory on board, VGA/LVDS/iDP, Dual PCIe GbE, PCIe Mini, USB 3.2 Gen 1 (5Gb/s), SATA 3Gb/s, mSATA, COM, Audio and RoHS
19800-000300-100-RS	RS-232 cable with bracket, 300mm, P=2.0
32001-008600-200-RS	Dual-port USB cable, 210mm, P=2.0
32006-001100-201-RS	PS/2 KB/MS cable, 135mm/110mm, P=2.0
32007-005200-200-RS	Audio cable, 300mm, P=2.0
32205-003800-300-RS	RS-422/485 cable, 200mm, P=2.0
DP-DP-R10	DisplayPort to DisplayPort converter board (for IEI iDP connector)
DP-DVI-R10	DisplayPort to DVI-D converter board (for IEI iDP connector)
DP-HDMI-R10	DisplayPort to HDMI converter board (for IEI iDP connector)
DP-LVDS-R10	DisplayPort to LVDS converter board (for IEI iDP connector)
DP-VGA-R10	DisplayPort to VGA converter board (for IEI iDP connector)

**By order production, MOQ: 100

WAFER-BT

3.5" SBC with Intel® 22nm Atom™/Celeron® on-board SoC, VGA/LVDS/ iDP, Dual PCIe GbE, USB 3.2 Gen 1 (5Gb/s), PCIe Mini, SATA 3Gb/s, mSATA, COM, Audio and RoHS

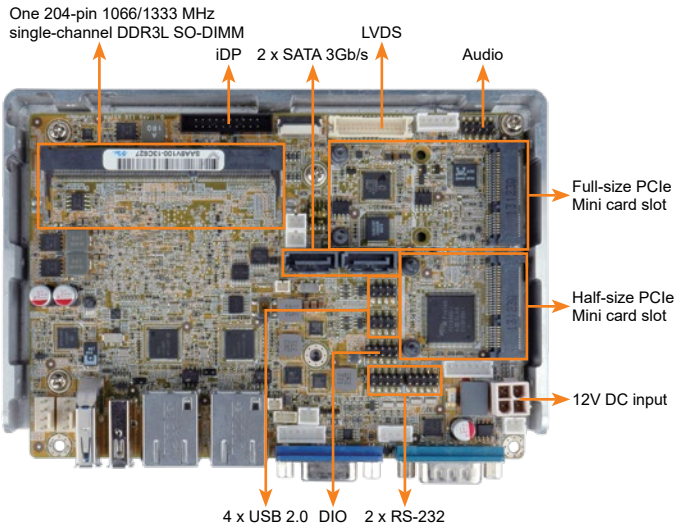

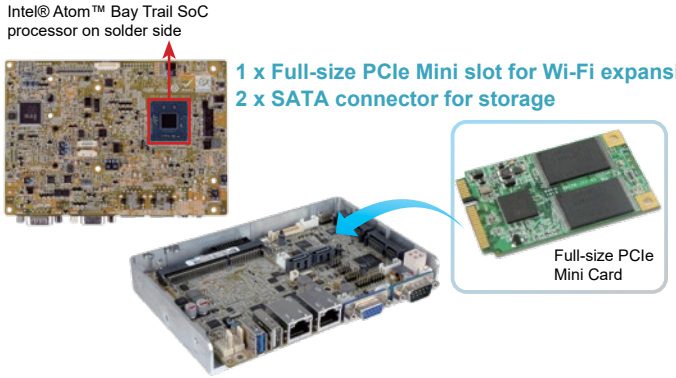

Dual independent display (max. support 1920x1200@60Hz)



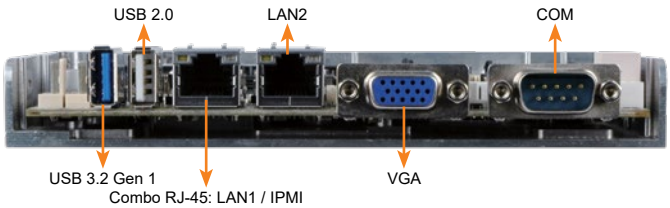



Specifications

- SoC
  Intel® Atom™ E3845 on-board SoC (1.91GHz, quad-core, 2MB cache, TDP=10W)
  Intel® Atom™ E3825 on-board SoC (1.33GHz, dual-core, 1MB cache, TDP=6W)
  Intel® Atom™ E3815 on-board SoC (1.46GHz, single-core, 512KB cache, TDP=5W)
  Intel® Celeron® J1900 on-board SoC (2GHz, quad-core, 2MB cache, TDP=10W)
  Intel® Celeron® N2930 on-board SoC (1.83GHz, quad-core, 2MB cache, TDP=7.5W)
  Intel® Celeron® N2807 on-board SoC (1.58GHz, dual-core, 2MB cache, TDP=4.3W)
- BIOS
  AMI UEFI BIOS
- Memory
  One 204-pin 1066/1333 MHz single-channel DDR3L SO-DIMM slot supports up to 8 GB (J1900, N2930, E3845, E3827, E3826, E3825, E3815) or 4 GB (N2807)
- Graphics Engine
  Intel® HD Graphics Gen 7 Engine with 4 execution units, supports DX11.1, OpenGL 4.2 and OpenCL1.2
- Display Output
  Dual independent display
  1 x VGA (up to 2560x1600@60Hz)
  1 x 24-bit dual-channel LVDS connector (up to 1920x1200@60Hz)
  1 x iDP interface for HDMI, LVDS, VGA, DVI, DP (up to 2560x1600@60Hz)
- Ethernet
  LAN1: Intel® I210-AT PCIe controller with NCSI support
  LAN2: Intel® I211-AT PCIe controller
- External I/O Interface
  1 x RS-232
  1 x USB 2.0
  1 x USB 3.2 Gen 1 (5Gb/s)
- Internal I/O Interface
  1 x KB/MS (1x6 pin)
  1 x RS-422/485 (1x4 pin, P=2.0)
  2 x RS-232 (2x5 pin, P=2.0)
  2 x SATA 3Gb/s with 5V SATA power connector
  4 x USB 2.0 (2x4 pin, P=2.0)
- SMBus
  1 x SMBus (1x4 pin)
- Audio
  Realtek ALC888S HD Audio codec
  1 x Front audio (2x5 pin)
- Front Panel
  1 x Power LED & HDD LED (1x6 pin)
  1 x Power button (1x2 pin)
  1 x Reset button (1x2 pin)
- LAN LED
  2 x LAN LED (1x2 pin)
- Expansion
  1 x Full-size PCIe Mini card slot (supports mSATA, colay with SATA port 2)
  1 x Half-siza PCIe Mini card slot (except for ECO sku)
- Digital I/O: 8-bit digital I/O (2x5 pin)
- Fan Connector
  1 x CPU smart fan (1x4 pin)
  1 x System smart fan (1x4 pin)
- Power Supply
  12V only DC input
  1 x Internal power connector (2x2 pin)
  Support AT/ATX mode
- Watchdog Timer: Software programmable, supports 1~255 sec. system reset
- Power Consumption
  12V@1.45A (Intel® Celeron® J1900 with one 8 GB 1333 MHz DDR3 memory)
- Operating Temperature: -20°C ~ 60°C
- Storage Temperature: -30°C ~ 70°C
- Operating Humidity: 5% ~ 95%, non-condensing
- Dimensions: 146mm x 102mm
- Weight: GW: 600g / NW: 250g
- CE/FCC compliant

Features

- 3.5" SBC supports Intel® 22nm Atom™ on-board SoC
- Dual independent display support
- 1333/1066 MHz 1.35V DDR3L SDRAM up to 8 GB
- COM, USB 3.2 Gen 1 (5Gb/s), SATA 3Gb/s, PCIe Mini, mSATA and Audio support

Packing List

1 x WAFER-BT-i1 single board computer	
1 x Audio cable	1 x SATA with power cable kit
1 x Power cable	1 x QIG

Ordering Information

Part No.	Description
WAFER-BT-J19001-R20	3.5" SBC supports Intel® 22nm Quad-Core Celeron™ J1900 2.0GHz (10W) on-board SoC with VGA/LVDS/iDP, Dual PCIe GbE, USB 3.2 Gen 1 (5Gb/s), PCIe Mini, SATA, mSATA, COM, Audio and RoHS
WAFER-BT-N28071-R20	3.5" SBC supports Intel® 22nm Dual-Core Celeron™ N2807 1.58GHz (4.5W) on-board SoC with VGA/LVDS/iDP, Dual PCIe GbE, USB 3.2 Gen 1 (5Gb/s), PCIe Mini, SATA, mSATA, COM, Audio and RoHS
WAFER-BT-N29301-R20	3.5" SBC supports Intel® 22nm Quad-Core Celeron™ N2920 1.86GHz (7.5W) on-board SoC with VGA/LVDS/iDP, Dual PCIe GbE, USB 3.2 Gen 1 (5Gb/s), PCIe Mini, SATA, mSATA, COM, Audio and RoHS
WAFER-BT-E38XX1-R20**	3.5" SBC supports Intel® 22nm Quad-Core Atom™ E38XX 1.91GHz (10W) on-board SoC with VGA/LVDS/iDP, Dual PCIe GbE, USB 3.2 Gen 1 (5Gb/s), PCIe Mini, SATA, mSATA, COM, Audio and RoHS
WAFER-BT-J19001-ECO-R20	3.5" SBC supports Intel® 22nm Quad-Core Celeron™ J1900 2.0GHz (10W) on-board SoC with VGA/LVDS/iDP, Dual PCIe GbE, USB 3.2 Gen 1 (5Gb/s), PCIe Mini, SATA, mSATA, COM, Audio, ECO packing and RoHS (10 pcs/pack)
19800-000300-100-RS	RS-232 cable, 300mm, P=2.0
32001-008600-200-RS	Dual-port USB cable, 210mm, P=2.0
32006-001100-201-RS	PS/2 KB/MS cable, 135mm/110mm, P=2.0
32205-003800-300-RS	RS-422/485 cable, 200mm, P=2.0

**By order production, MOQ: 100

WAFER-KBN-i1

3.5" SBC supports AMD® Embedded G-Series SoC with VGA/LVDS/ iDP, Dual GbE, PCIe Mini, USB 3.2 Gen 1 (5Gb/s), SATA 6Gb/s, iRIS-1010, HD Audio and RoHS

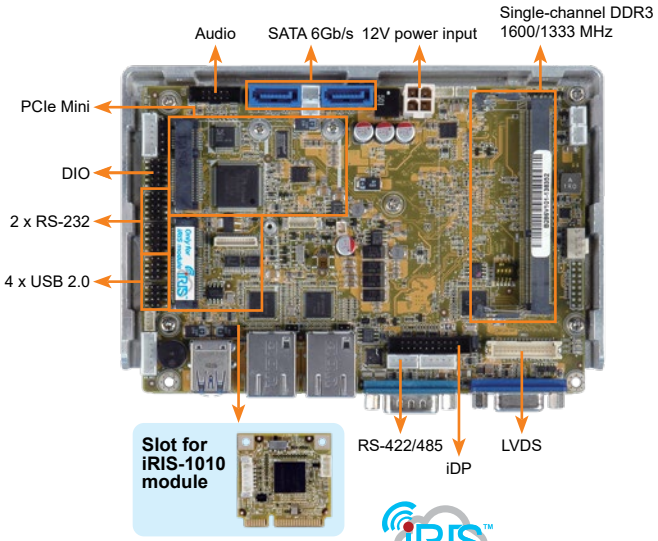

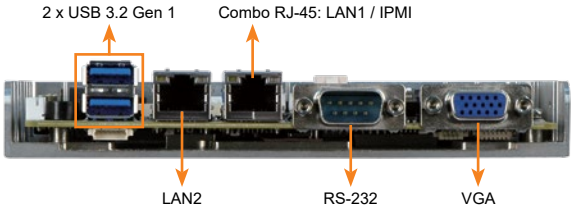

Features

- 3.5" form fator with AMD® Embedded G-Series SoC
- 12V only single voltage design with AT/ATX mode
- 18/24-bit dual-channel LVDS for high resolution panel
- Support IPMI 2.0 with iRIS-1010 module
- Support full-size PCIe Mini card slot for mSATA, wireless card and DOM

Packing List

1 x WAFER-KBN single board computer with Enclosure Heatsink	
1 x Audio cable	
1 x Power cable	2 x SATA with 5V output cable kit
1 x RS-232 cable	1 x QIG

Specifications

- SoC
  AMD® Embedded G-Series SoC
  GX-415GA on-board SoC (1.5GHz, quad-core, 2MB cache, TDP=15W)
  GX-210HA on-board SoC (1.0GHz, dual-core, 1MB cache, TDP=9W)
  GX-420CA on-board SoC (2.0GHz, quad-core, 2MB cache, TDP=25W)
  GX-217GA on-board SoC (1.65GHz, dual-core, 1MB cache, TDP=15W)
- BIOS
  AMI UEFI BIOS
- Memory
  One 204-pin 1600/1333 MHz dual-channel DDR3 & DDR3L SDRAM SO-DIMM slot supports up to 8 GB
- Graphics Engine
  GPU frequency 500 MHz (Radeon™ HD 8330E) for GX-415GA
  GPU frequency 300 MHz (Radeon™ HD 8210E) for GX-210HA
  GPU frequency 600 MHz (Radeon™ HD 8400E) for GX-420CA
  GPU frequency 450 MHz (Radeon™ HD 8280E) for GX-217GA
  Support DX11.1, OpenGL 4.1 and OpenCL1.2
  UVD4.2 decode for H.264, MPEG2/4, VC1, MVC
  VCE 2.0 encode for H.264, VCE
- Display Output
  1 x VGA (up to 2048x1536@60Hz)
  1 x 18/24-bit dual-channel LVDS (up to 1920x1200@60Hz)
  1 x iDP interface for HDMI, LVDS, VGA, DVI, DP (up to 2560x1600@60 Hz)
- Ethernet
  LAN1: Intel® I210-AT PCIe controller with NCSI support
  LAN2: Intel® I211-AT PCIe controller
- External I/O Interface
  1 x RS-232 — 2 x USB 3.2 Gen 1 (5Gb/s)
- Internal I/O Interface
  1 x KB/MS (1x6 pin) — 2 x SATA 3Gb/s with 5V SATA power connector
  1 x RS-422/485 (1x4 pin, P=2.0) — 4 x USB 2.0 (2x4 pin, P=2.0)
  2 x RS-232 (2x5 pin, P=2.0)
- iRIS Remote Management Module: 1 x iRIS-1010 slot
- SMBus: 1 x SMBus (1x4 pin)
- I²C: 1 x I²C (1x4 pin)
- Audio
  Realtek ALC888S HD Audio codec
  1 x Front audio (2x5 pin)
  1 x S/PDIF (1x4 pin)
- Front Panel
  1 x Power LED & HDD LED (1x6 pin)
  1 x Power button (1x2 pin)
  1 x Reset button (1x2 pin)
- LAN LED: 2 x LAN LED (1x2 pin)
- Expansion: 1 x Full-size PCIe Mini card slot (supports mSATA co-lay SATA port 2)
- Digital I/O: 8-bit digital I/O (2x5 pin)
- Fan Connector: 1 x 4-pin system fan connector
- Watchdog Timer: Software programmable, support 1~255 sec. system reset
- Power Supply
  12V only DC input
  1 x Internal power connector (2x2 pin)
  Support AT/ATX mode
- Power Consumption
  12V@2.12A (AMD GX-415GA 1.5GHz CPU with one 4 GB 1333 MHz DDR3 memory)
- Operating Temperature: 0°C ~ 60°C
- Storage Temperature: -10°C ~ 70°C
- Operating Humidity: 5% ~ 95%, non-condensing
- Dimensions: 146mm x 102mm
- Weight: GW: 600g/ NW: 250g
- CE/FCC compliant

Dimensions *(Unit: mm)*

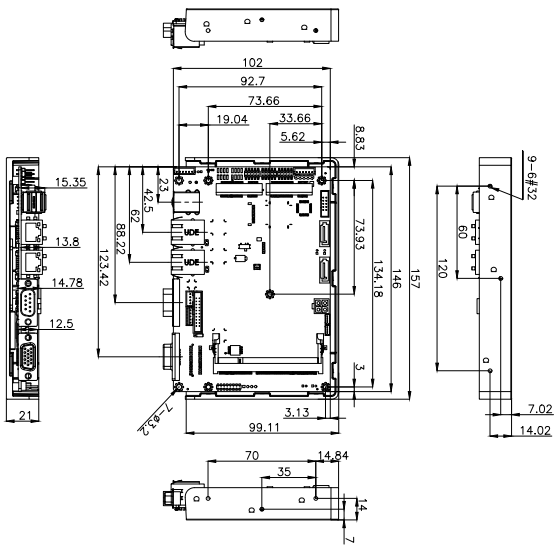

Ordering Information

Part No.	Description
WAFER-KBN-i1-4151-R10	3.5" SBC supports AMD 28nm quad-core GX-415GA 1.5GHz (15W) on-board SoC with VGA/LVDS, Dual GbE, PCIe Mini, USB 3.2 Gen 1 (5Gb/s), SATA 6Gb/s, iRIS-1010, HD Audio and RoHS
WAFER-KBN-i1-2101-R10	3.5" SBC supports AMD 28nm dual-core GX-210HA 1.0GHz (9W) on-board SoC with VGA/LVDS, Dual GbE, PCIe Mini, USB 3.2 Gen 1 (5Gb/s), SATA 6Gb/s, iRIS-1010, HD Audio and RoHS
iRIS-1010-R10	IPMI 2.0 adapter card with AST1010 BMC chip (W/O KVM over IP function) for PCIe Mini socket interface
32001-008600-200-RS	Dual-port USB cable, 210mm, P=2.0
32006-001100-201-RS	PS/2 KB/MS cable, 135mm/110mm, P=2.0
32205-003800-300-RS	RS-422/485 cable, 200mm, P=2.0
DP-DP-R10	DisplayPort to DisplayPort converter board (for IEI iDP connector)
DP-DVI-R10	DisplayPort to DVI-D converter board (for IEI iDP connector)
DP-HDMI-R10	DisplayPort to HDMI converter board (for IEI iDP connector)
DP-LVDS-R10	DisplayPort to LVDS converter board (for IEI iDP connector)
DP-VGA-R10	DisplayPort to VGA converter board (for IEI iDP connector)

Note: Models with other CPU not listed in the table are requested by MOQ: 100 pcs/lot.

WAFER-LX

3.5" SBC with on-board AMD Geode™ LX 800 Processor VGA/LVDS/TTL, Dual LAN and SATA

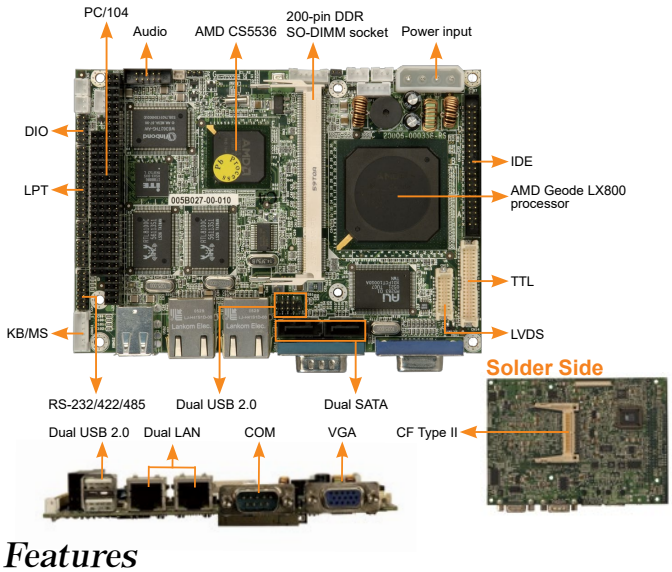

Features

- 3.5" form factor embedded board with AMD Geode™ LX 800 processor and RoHS compliant
- 333/400 MHz DDR SDRAM SO-DIMM supports up to 1 GB
- Complete I/O support with two SATA, IDE, CF Type II, PC/104, dual LAN and four USB 2.0
- 24-bit TTL/18-bit single-channel LVDS
- Value embedded applications with low power and fanless design. Support Windows® XP/CE/XPe
- The best choice for thin client Windows® CE 5.0, XPe OS image with ICA, RDP and IE APs ready

Specifications

- CPU
  AMD Geode™ LX800 (500 MHz) processor
- Chipset: AMD CS5536
- BIOS: Award BIOS
- System Memory
  One 200-pin 400/333 MHz DDR SDRAM SO-DIMM slot supports up to 1 GB
- Ethernet
  Dual LAN: 10/100Mbps RTL8100C Ethernet Controller
- External I/O Interface
  1 x RS-232 2 x USB 2.0
- Internal I/O Interface
  1 x CF Type II 1 x IDE (2x22 pin, P=2.0)
  1 x KB/MS (1x6 pin) 1 x LPT (2x13 pin, P=2.0)
  1 x RS-232 (2x5 pin, P=2.0)
  1 x RS-422/485 (2x2 pin, P=2.0)
  2 x SATA 1.5Gb/s (RAID 0, 1 support)
  2 x USB 2.0 (2x4 pin, P=2.0)
- Expansion: 1 x PC/104
- Digital I/O: 8-bit digital I/O (2x5 pin)
- Audio: Realtek ALC203 with AC'97 codec
- Display Output
  1 x VGA (up to 1920x1440@60Hz)
  1 x 18-bit single-channel LVDS (up to 1280x1024@60Hz)
- Infrared Interface: 1 x Infrared interface (1x5 pin)
- Watchdog Timer
  Software programmable supports 1~255 sec. system reset
- Power Supply
  5V only DC input
  1 x Internal power connector (1x4 pin)
  Support AT/ATX mode
- Power Consumption
  5V@1.53A (AMD LX800 with one 1 GB 400 MHz DDR memory)
- Operating Temperature: 0°C ~ 60°C
- Storage Temperature: -10°C ~ 70°C
- Operating Humidity: 5% ~ 95%, non-condensing
- Dimensions: 146 mm x 102 mm
- Weight: GW: 670g / NW: 230g
- CE/FCC compliant

Dimensions *(Unit: mm)*

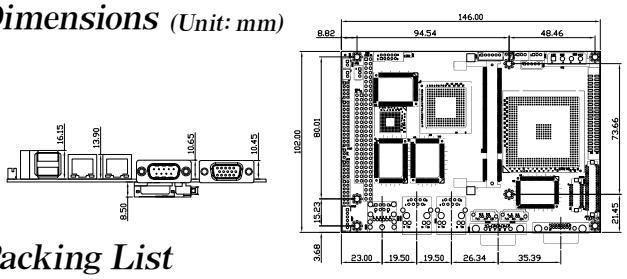

Packing List

1 x WAFER-LX single board computer	1 x SATA power cable
1 x Audio cable	1 x USB cable
1 x IDE flat cable 44p/44p	2 x SATA cable
1 x KB/MS Y cable	1 x Mini jumper pack
1 x RS-232/422/485 cable	1 x QIG

Ordering Information

Part No.	Description
WAFER-LX-800-R12	3.5" SBC with AMD Geode™ LX 800 processor, audio, VGA/ LVDS/TTL, dual LAN and SATA connectors
WAFER-LX-800-NS-R12	3.5" SBC with AMD Geode™ LX 800 processor, audio, VGA/ LVDS/TTL, dual LAN and w/o SATA connectors
32200-015100-RS	LPT cable, 280mm, P=2.0

WAFER-LX2

3.5" SBC with AMD Geode™ LX 800 Processor, Eight COM, DDR 400 MHz, VGA/ LVDS/TTL Display Interfaces, PC/104, Four USB 2.0, Embedded OS Support

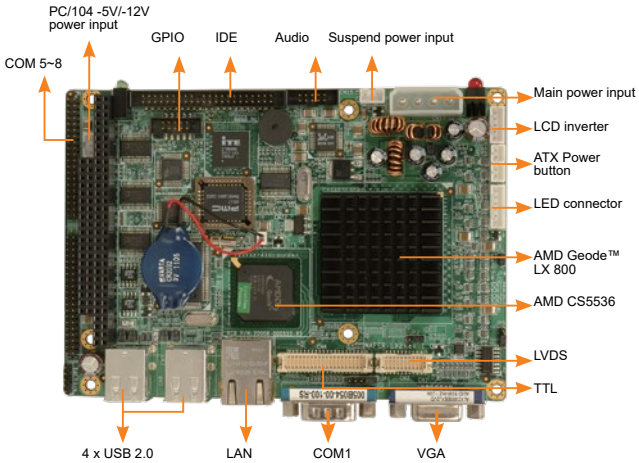

Features

- 3.5" form factor with AMD Geode™ LX 800 CPU
- One 333/400 MHz DDR SO-DIMM socket supports up to 1 GB memory
- VGA, 24-bit TTL, 18-bit LVDS display interfaces
- Seven RS-232 and one RS-232/422/485

Specifications

- CPU
  AMD Geode™ LX 800 (500 MHz)
- Chipset
  CS5536
- BIOS
  Award BIOS
- System Memory
  One 200-pin 400/333 MHz DDR SDRAM SO-DIMM slot supports up to 1 GB
- Ethernet
  LAN: 10/100Mbps RTL8100C Ethernet Controller
- External I/O Interface
  1 x RS-232 4 x USB 2.0
- Internal I/O Interface
  1 x CF Type II
  1 x IDE (2x22 pin, P=2.0)
  1 x RS-232/422/485 (2x7 pin, P=2.0)
  6 x RS-232 (2x5 pin, P=2.0)
- Expansion
  1 x PC/104 (ISA Bus)
- Digital I/O
  8-bit digital I/O (2x5 pin)
- Display Output
  1 x VGA (up to 1920x1440@60Hz)
  1 x 24-bit single-channel TTL (up to 1600x1200@60Hz)
  1 x 18-bit single-channel LVDS (up to 1280x1024@60Hz)
- Audio: Realtek ALC203 with AC`97 codec
- Watchdog Timer
  Software programmable supports 1 ~255 sec. system reset
- Power Supply
  5V only DC input
  1 x Internal power connector (1x4 pin)
  Support AT/ATX mode
- Power Consumption
  5V@1.33A (AMD Geode™ LX 800 with one 1 GB 400 MHz DDR memory)
- Operating Temperature
  0°C ~ 60°C (32°F ~ 140°F)
- Storage Temperature: -10°C ~ 70°C
- Operating Humidity
  5% ~ 95%, non-condensing
- Dimensions: 146 mm x 102 mm
- Weight: GW: 670g / NW: 230g
- CE/FCC compliant

Dimensions *(Unit: mm)*

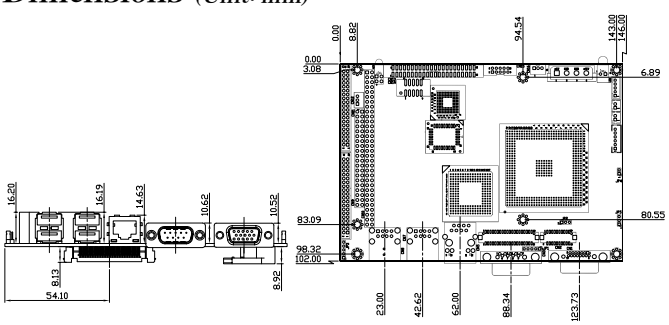

Packing List

1 x WAFER-LX2 single board computer	2 x Quad RS-232 adapter cable
1 x Audio cable	1 x Mini jumper pack
1 x IDE flat cable 44p/44p	1 x QIG

Ordering Information

Part No.	Description
WAFER-LX2-800-R12	3.5" SBC with AMD Geode™ LX 800 processor, Audio, VGA/LVDS, TTL/LVDS, four USB 2.0, seven RS-232 and one RS-232/422/485

WAFER Dimensions (Unit: mm)

WAFER-AL

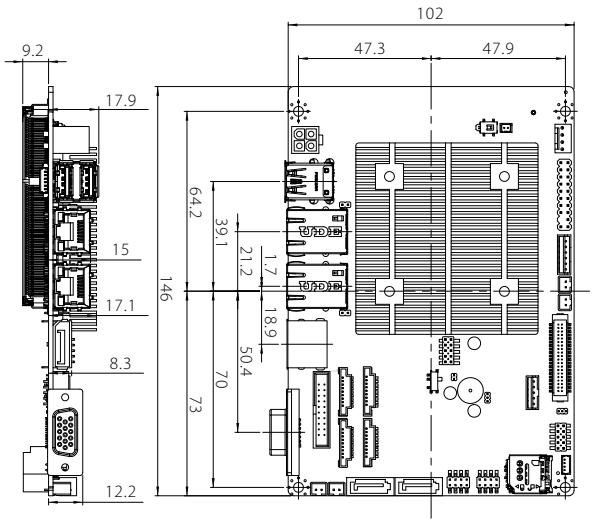

WAFER-ULT2-i1/WAFER-ULT-i1

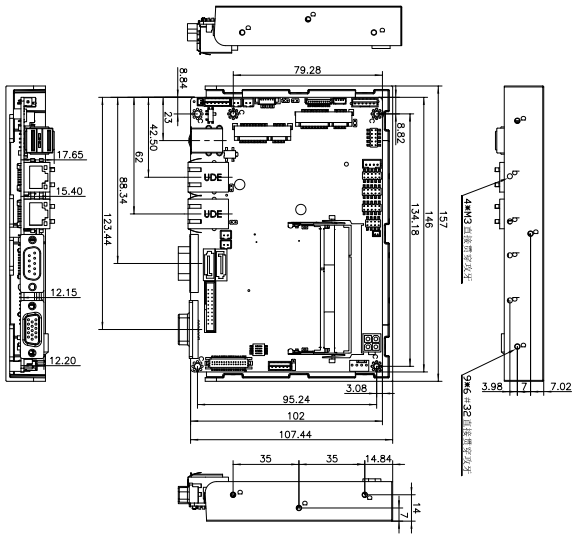

WAFER-ULT4/ULT3

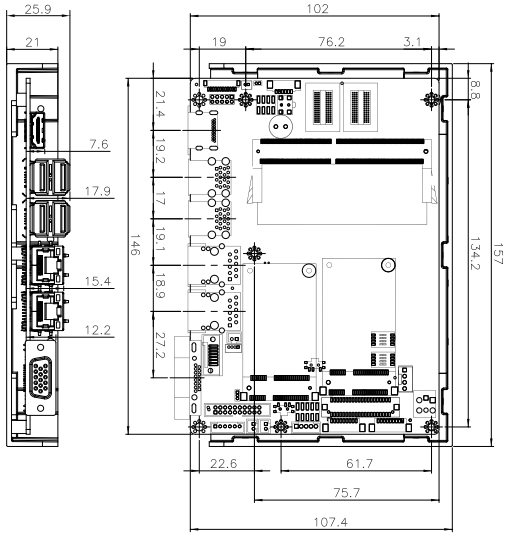

WAFER-BT-E38001W2

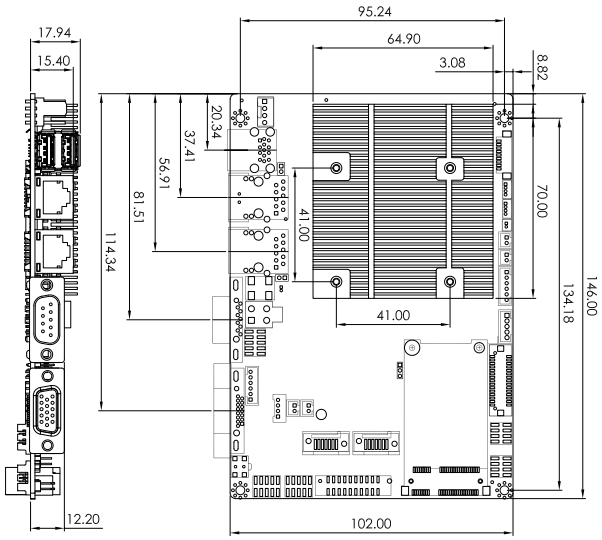

WAFER-BW

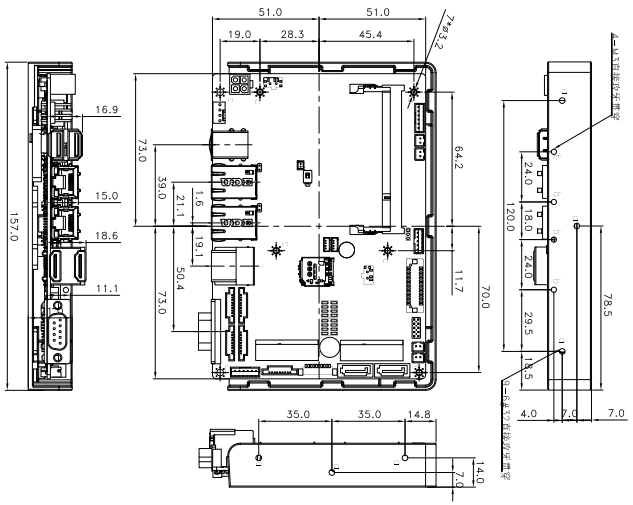

WAFER-BT-i1

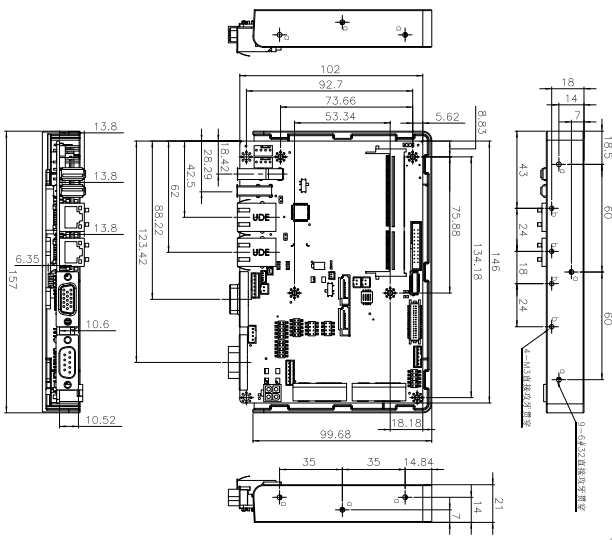

PC/104 Selection Guide





Model Name	PM-BT	PM-LX	PM-LX2
CPU Socket	On board	On board	On board
CPU Type	Intel® Atom™/Celeron® SoC	AMD Geode™ LX 800 500 MHz	AMD Geode™ LX 800 500 MHz
Chipset	Intel® Atom™/Celeron® SoC	Geode™ LX800 + CS5536	Geode™ LX800 + CS5536
Memory	1 x 204-pin 1066/1333 MHz DDR3L SO-DIMM (system max. 8 GB)	1 x 200-pin 400 MHz 1 GB (max.) DDR SDRAM SO-DIMM	1 x 200-pin 400 MHz 1 GB (max.) DDR SDRAM SO-DIMM
Display Interface	Dual display supported 1 x VGA 1 x 18/24-bit single-channel LVDS	Dual display supported 1 x VGA 1 x 24-bit TTL	Dual display supported 1 x VGA 1 x 24-bit TTL
Ethernet	GbE by Intel® I210 Ethernet PHY	10/100Mbps LAN by Realtek RTL8100C	10/100Mbps LAN by Realtek RTL8100C
iRIS Remote Management Module	N/A		
I/O Interface	2 x RS-232/422/485 (2x5, P=2.0) 3 x USB 2.0 (1x4 pin, P=1.25)	1 x KB/MS by pin header 1 x LPT 1 x RS-422/485 2 x RS-232 2 x USB 2.0	1 x KB/MS by pin header 1 x LPT 1 x RS-422/485 2 x RS-232 2 x USB 2.0
Storage Interface	1 x SATA 3Gb/s with 5V SATA power connector On-board SSD (optional)	1 x IDE 1 x CF Type II	1 x Slim FDD 1 x IDE 1 x CF Type II
Audio	N/A		
Digital I/O	1 x 8-bit DIO	N/A	
Power Consumption	5V@1.70A (Intel® Celeron® J1900 CPU with 8GB memory)	5V@1.13A (AMD Geode™ LX 800 with 1 GB DDR 400 MHz)	5V@1.09A (AMD Geode™ LX 800 with 512MB DDR 400 MHz)
Watchdog Timer	Software programmable and supports 1~255 sec. system reset		
Operating Environment	Temperature Range: -20°C ~ 60°C (for J1900/N2930/N2807) Relative Humidity: -40°C ~ 85°C (for E38xx)	Temperature Range: 0°C ~ 60°C Relative Humidity: 5% ~ 95%, non-condensing	Temperature Range: -40°C ~ 70°C (W) Relative Humidity: 5% ~ 95%, non-condensing
Expansion Slot	1 x Full-size PCIe Mini slot (support mSATA) 1 x PC/104-Plus (ISA+PCI)	1 x PCI-104	1 x PC-104
CPU Cooler	Heatsink	Heatsink	Heatsink

PM-BT

PC/104-Plus SBC with Intel® Atom™/Celeron® on-board SoC with DDR3L, VGA, LVDS, GbE, USB 2.0, SATA 3Gb/s, RS-232/422/485 and 5V DC input, RoHS

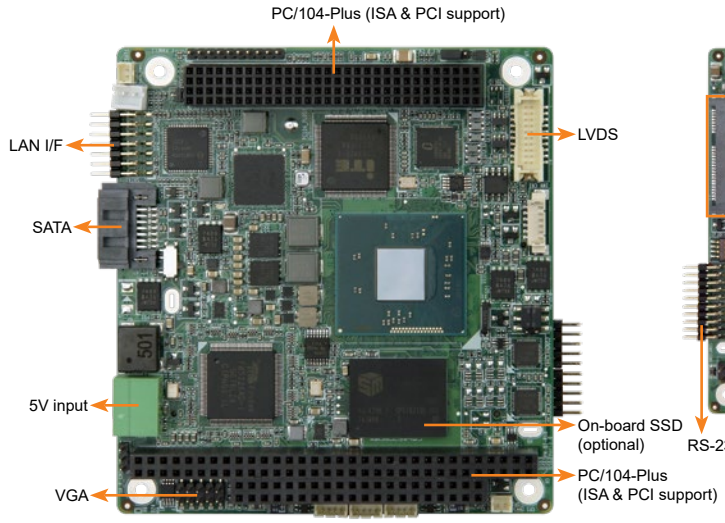

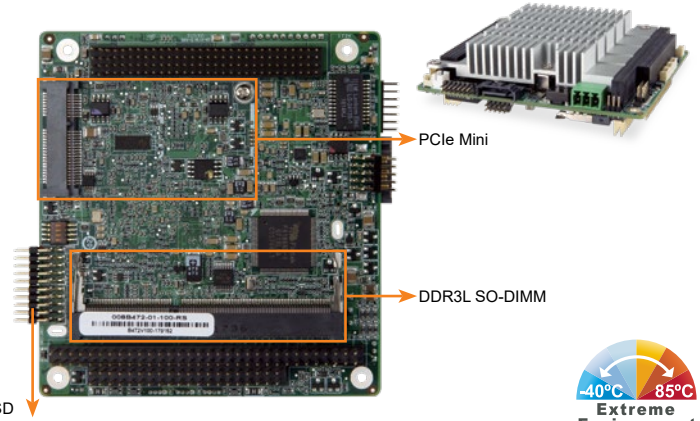

-40°C 85°C Extreme Environment

PC/104-Plus | Fanless | 5V DC Input | PCIe Mini Expansion | Dual Display

Specifications

- SoC
  Intel® Atom™ E3845 on-board SoC (1.91GHz, quad-core, 2MB cache, TDP=10W)
  Intel® Atom™ E3825 on-board SoC (1.33GHz, dual-core, 1MB cache, TDP=6W)
  Intel® Celeron® J1900 on-board SoC (2GHz, quad-core, 2MB cache, TDP=10W)
  Intel® Celeron® N2807 on-board SoC (1.58GHz, dual-core, 2MB cache, TDP=4.3W)
- BIOS
  AMI UEFI BIOS
- Memory
  One 204-pin 1333/1066 MHz single-channel DDR3L SO-DIMM supports up to 8 GB (J1900, N2930, E3845, E3827, E3826, E3825, E3815) or 4 GB (N2807)
- Graphics Engine
  Intel® HD Graphics Gen 7 Engine with four execution units, supporting DX11.1, OpenGL 4.2 and OpenCL1.2
- Display Output
  Dual independent display
  1 x VGA (up to 2560x1600@60 Hz)
  1 x 18/24-bit single-channel LVDS (2x10 pin)
- Ethernet
  1 x Intel® I210
- Super I/O
  Fintek F81866
- Internal I/O Interface
  1 x SATA 3Gb/s with 5V SATA power connector
  3 x USB 2.0 (1x4 pin, P=1.25)
  2 x RS-232/422/485 (2x5, P=2.0)
- Storage
  On-board SSD (optional, support by request)
- Front Panel
  1 x 10-pin header, P=2.0 (power LED, HDD LED, power button and reset button)
- Expansion
  1 x Full-size PCIe Mini slot (supports mSATA)
  1 x PC/104-Plus (ISA+PCI)*
- Digital I/O
  1 x 8-bit digital I/O (2x5 pin, P=2.0)
- Power Supply
  5V DC input
  12V for fan, LVDS and PCI-104 plus
  » 5V for PCI-104 plus (1x3 pin, P=2.0)
  » 12V for PCI-104 plus (1x3 pin, P=2.0)
  3/5V jumper for PCI-104 plus
  Support AT/ATX mode
  ErP/EuP Compliant
- Power Consumption
  5V@1.70A (Intel® Celeron® J1900 CPU with 8GB memory)
- Watchdog Timer
  Software programmable, supports 1~255 sec. system reset
- Operating Temperature
  -20°C ~ 60°C (for J1900/N2930/N2807)
  -40°C ~ 85°C (for E38xx)
- Storage Temperature
  -40°C ~ 85°C
- Thermal
  Heatsink
- Operating Humidity
  5% ~ 95%, non-condensing
- Dimensions
  96 mm x 90 mm
- Weight
  GW: 500g / NW 120g
- CE/FCC compliant

Features

- PC/104 form factor SBC supports 22nm Intel® Atom™ on-board SoC
- PC/104-Plus (ISA and PCI signal) function support
- 5V DC input solution
- Support 2 COM, PCIe Mini, USB and optional on-board SSD
- Dual display from VGA and LVDS
- Wide range temperature support froom -40°C ~ 85°C (for E38xx series CPU)

Dimensions *(Unit: mm)*

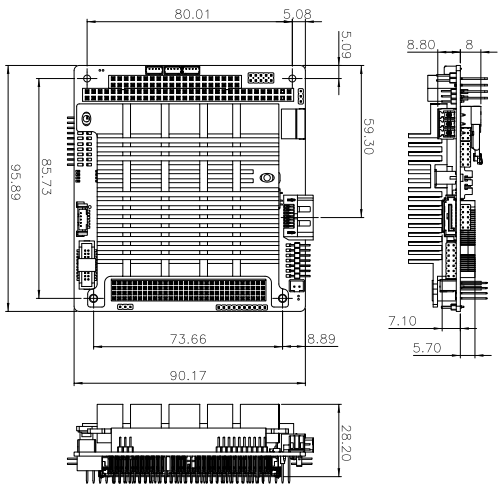

Packing List

1 x PM-BT single board computer	
1 x COM port cable	1 x SATA cable kit
1 x Heatsink	1 x Single-port USB cable
1 x LAN cable	1 x VGA cable

Ordering Information

Part No.	Description
PM-BT-J19001-R10	PC/104-Plus single board computer with Intel® Celeron® J1900 SoC with DDR3L, VGA, LVDS, USB 2.0, SATA 3Gb/s, GbE, RS-232/422/485 and 5V DC input, RoHS
PM-BT-N28071-R10	PC/104-Plus single board computer with Intel® Celeron® N2807 SoC with DDR3L, VGA, LVDS, USB 2.0, SATA 3Gb/s, GbE, RS-232/422/485 and 5V DC input, RoHS
PM-BT-E38xx1W2-R10**	PC/104-Plus single board computer with Intel® Atom™ E38xx SoC with DDR3L, VGA, LVDS, USB 2.0, SATA 3Gb/s, GbE, RS-232/422/485 and 5V DC input, RoHS,-40°C ~ 85°C
33403-000015-RS	PC104 plus spacer (for PCI) 120 pin socket connector
33403-000016-RS	PC104 plus spacer (for ISA) 64+40 pin socket connector

** Note: Models with other CPUs not listed in the table are requested by MOQ - 100 pcs/lot.
* ISA limitation, Please refer to the user manual for more information.

PM-LX2

AMD Geode™ LX 800 CPU on-board PC/104 Module

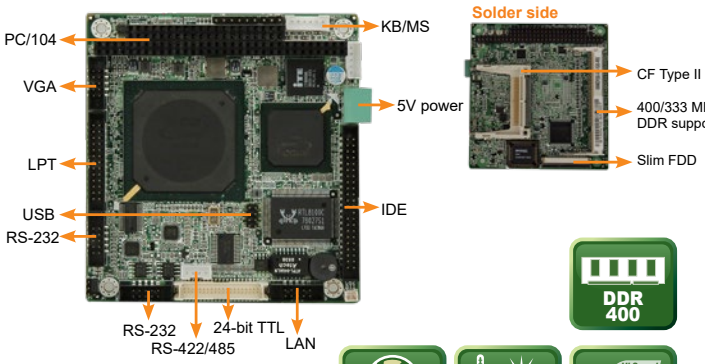

DDR 400 | Fanless | Wide Temperature | USB 2.0

Specifications

- CPU
  AMD Geode™ LX 800 (500 MHz)
- Chipset
  AMD CS5536
- BIOS
  AMI BIOS
- System Memory
  One 200-pin 400 MHz DDR SDRAM SO-DIMM supports up to 1 GB
- Ethernet
  One Realtek RTL8100C 10/100Mbps Ethernet chipset
- Internal I/O Interface
  1 x CF Type II
  1 x IDE (2x22 pin, P=2.0)
  1 x LPT (2x13 pin, P=2.0)
  1 x KB/MS (1x6 pin)
  2 x RS-232 (2x5 pin, P=2.0)
  1 x RS-422/485 (1x4 pin, P=2.0)
  1 x Slim FDD
  2 x USB 2.0 (2x4 pin, P=2.0)
- Expansion
  1 x PC/104
- Display Output
  1 x VGA (up to 1920x1440@60Hz)
  1 x 24-bit single-channel TTL (up to 1600x1200@60Hz)
- Watchdog Timer
  Softwafe programmable supports 1~255 sec. system reset.
- Power Supply
  5V only DC input
  1 x Internal power connector (1x2 pin)
  Support AT mode
- Power Consumption
  5V@1.09A (AMD Geode™ LX 800 with one 512MB 400 MHz DDR)
- Operating Temperature
  PM-LX2-800-R10: 0°C ~ 60°C
- Operating Humidity
  5% ~ 95%, non-condensing
- Dimensions
  96mm (L) x 90mm (W)
- Weight
  GW: 500g / NW 110g
- CE/FCC compliant

Dimensions (mm)

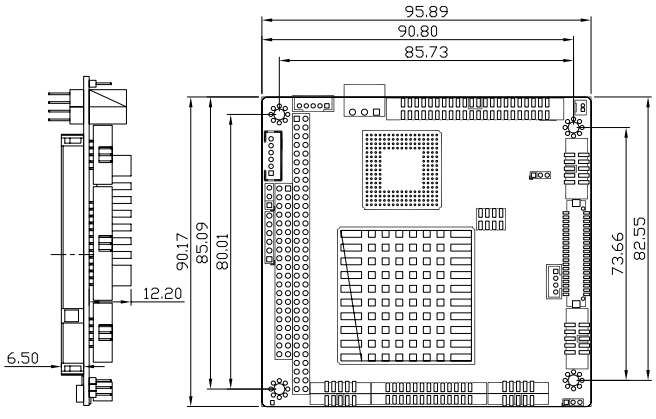

Packing List

1 x PM-LX2 single board computer	1 x PS/2 KB/MS cable
1 x ATA33 flat cable	1 x VGA cable
1 x Dual USB cable	2 x RS-232 cable
1 x LAN cable	1 x Mini jumper pack
1 x Power cable	1 x QIG

Ordering Information

Part No.	Description
PM-LX2-800-R10	PC/104 SBC with AMD Geode™ LX 800 500 MHz, VGA/TTL, LAN, USB 2.0 and CF Type II
32200-015100-RS	LPT cable, 280mm, P=2.0
32205-003800-300-RS	RS-422/485 cable, 200mm, P=2.0

PM-LX

PCI-104 Module with on-board AMD Geode™ LX 800 CPU

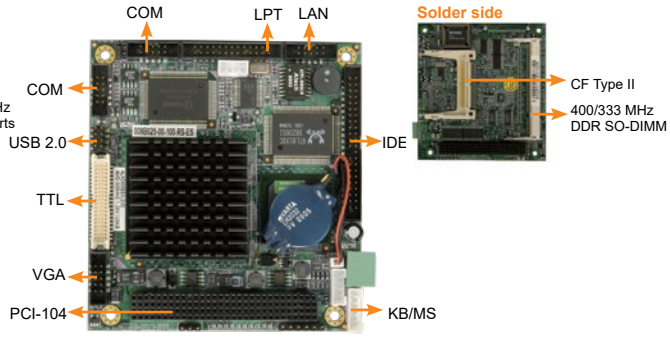

DDR 400 | Fanless | USB 2.0

Specifications

- CPU
  AMD Geode™ LX 800 (500 MHz) processor
- Chipset
  AMD CS5536
- BIOS
  Award BIOS
- System Memory
  One 200-pin 400 MHz DDR SDRAM SO-DIMM supports up to 1 GB
- Ethernet
  10/100Mbps realtek RTL8100C Ethernet chipset
- Internal I/O Interface
  1 x CF Type II
  1 x IDE (2x22 pin, P=2.0)
  1 x LPT (2x13 pin, P=2.0)
  1 x KB/MS (1x6 pin)
  2 x RS-232 (2x5 pin, P=2.0)
  1 x RS-422/485 (1x4 pin, P=2.0)
  2 x USB 2.0 (2x4 pin, P=2.0)
- Expansion
  1 x PCI-104
- Display Output
  1 x VGA (up to 1920x1440@60Hz)
  1 x 24-bit single-channel TTL (up to 1600x1200@60Hz)
- Watchdog Timer
  Software programmable supports 1~255 sec. system reset
- Power Supply
  5V only DC input
  1 x Internal power connector (1x2 pin)
  Support AT mode
- Power Consumption
  5V@1.13A (AMD Geode™ LX 800 with one 1 GB 400 MHz DDR memory)
- Operating Temperature
  0°C ~ 60°C
- Storage Temperature
  -10°C ~ 70°C
- Operating Humidity
  5% ~ 95%
- Dimensions: 95 mm x 95 mm
- Weight: GW: 500g / NW: 110g
- CE/FCC compliant

Dimensions (mm)

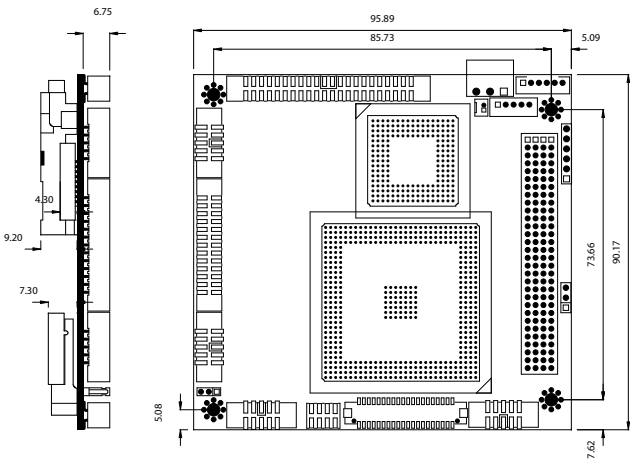

Packing List

1 x PM-LX single board computer	1 x USB cable
1 x ATA33 flat cable	1 x VGA cable
1 x KB/MS Y cable	2 x RS-232 cable
1 x LAN cable	1 x Mini jumper pack
1 x Power cable	1 x QIG

Ordering Information

Part No.	Description
PM-LX-800-R11	PCI-104 SBC with AMD Geode™ LX 800 processor , VGA/TTL, LAN, USB 2.0, CF Type II
32200-015100-RS	LPT cable, 280mm, P=2.0
32205-003800-300-RS	RS-422/485 cable, 200mm, P=2.0

Pico-ITX Selection Guide





Model Name	HYPER-AL	HYPER-BW	HYPER-BT
CPU Socket	On board	On board	On board
CPU Type	Intel® Celeron® SoC	Intel® Pentium®/Celeron® SoC	Intel® Atom™/Celeron® SoC
Chipset	Intel® Celeron® SoC	Intel® Pentium®/Celeron® SoC	Intel® Atom™/Celeron® SoC
Memory	1 x 204-pin 1866/1600MHz single-channel DDR3L SDRAM unbuffered SO-DIMM slot (system max. 8GB)	1 x 204-pin 1600/1333 MHz single-channel DDR3L SDRAM unbuffered SO-DIMM slot (system max. 8 GB)	1 x 204-pin 1600/1333 MHz single-channel DDR3L SDRAM unbuffered SO-DIMM slot (system max. 8 GB)
Display Interface	Dual independent dispaly 1 x HDMI 1 x LVDS	Dual independent dispaly 2 x Mini HDMI	Dual independent dispaly 1 x VGA 1 x iDP interface
Ethernet	LAN1: Realtek RTL8111H controller LAN2: Realtek RTL8111H controller	LAN: Realtek RTL8111GN controller	LAN: Intel® I211-AT PCIe GbE controller
iRIS Remote Management Module	N/A		
I/O Interface	1 x RS-232 2 x USB 2.0 2 x USB 3.2 Gen 1	1 x RS-232 1 x USB 3.2 Gen 1 3 x USB 2.0	1 x RS-232 1 x USB 3.2 Gen 1 3 x USB 2.0
Storage Interface	1 x SATA 6Gb/s with 5V SATA power connector (no RAID)	1 x SATA 6Gb/s with 5V SATA power connector (no RAID)	1 x SATA 3Gb/s with 5V SATA power connector (no RAID)
Audio	10 pin header on board support 7.1 channel HD Audio by IEI AC-KIT-888S-R10 kit		Realtek ALC888S HD Audio codec
Power Consumption	12V@2.36A (Intel® Celeron® processor N3350 with 8 GB 1600 MHz DDR3L memory)	12V@1.52A (Intel® Pentium® processor N3710 with 8 GB 1600 MHz DDR3L memory)	12V@1.35A (Intel® Celeron® processor J1900 with one 8 GB 1333 MHz DDR3L memory)
Watchdog Timer	Software programmable and supports 1~255 sec. system reset		
Operating Environment	Temperature Range: -20°C ~ 60°C (-4°F ~ 140°F) Relative Humidity: 5% ~ 95%, non-condensing		
Expansion Slot	1 x M.2 A key 2230 1 x M.2 B key 2242	1 x M.2 (B key)	N/A
CPU Cooler	Heat Spreader	Heatsink	Heat Spreader

HYPER-AL

PICO-ITX SBC supports Intel® 14nm Apollo Lake on-board SoC with DDR3L, HDMI, LVDS, dual GbE, USB 3.2 Gen 1 (5Gb/s), SATA, M.2 and RoHS

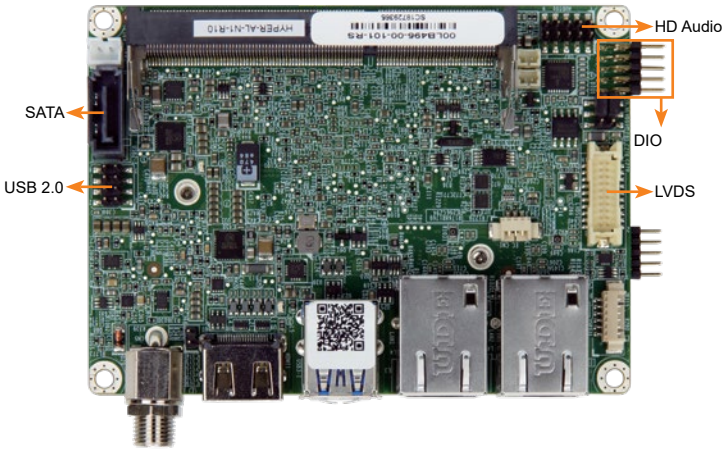

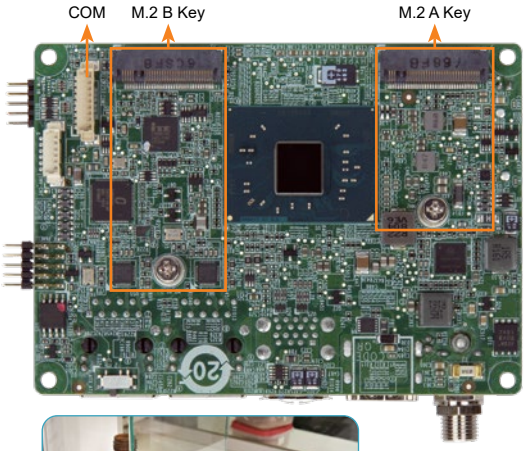

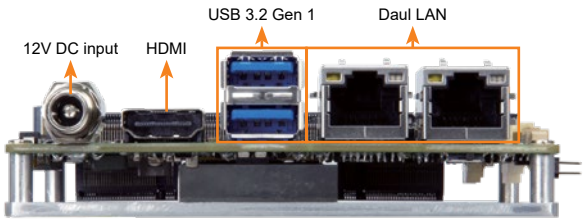



DDR3L 1600 | M.2 | Dual GbE | USB 3.2 | SATA 6Gb/s

Specifications

- SoC
  Intel® Celeron® N3350 on-board SoC (up to 2.4GHz, dual-core, 2M Cache, TDP=6W)
- BIOS
  AMI UEFI BIOS
- Memory
  One 204-pin 1866/1600MHz single-channel DDR3L SDRAM unbuffered SO-DIMM slot (system max. 8GB)
- Graphics Engine
  Intel® HD Graphics Gen9 Low Power, 18 Execution Units
  4K Codec Decode & Encode for HEVC 4, H.264, VP8, SVC, MVC
- Display Output
  1 x HDMI
  1 x LVDS (2x10 pin, single channel, 24bit)
- Ethernet
  LAN1: Realtek RTL8111H controller
  LAN2: Realtek RTL8111H controller
- External I/O interface
  2 x USB 3.2 Gen 1 (5Gb/s) (on rear I/O)
- Internal I/O interface
  1 x RS-232 (1x9 pin, P=1.25)
  1 x SATA 6Gb/s (w/ 5V SATA PWR)
  2 x USB 2.0 (2 by pin header) (2x4 pin, P=2.0)
- Audio
  1 x HD audio (2x5 pin, support 7.1 channel HD audio by IEI AC-KIT-888S-R10 kit)
- Front Panel
  1 x Front panel (1 x 8 pin, power LED, HDD LED, power buttom, reset buttom)
- Expansion
  1 x M.2 A key 2230 (PCIe, USB)
  1 x M.2 B key 2242 (USB, SATA)
- Digital I/O
  1 x 8-bit DIO (2x5 pin, P=2.0)
- Watchdog Timer
  Software programmable support 1~255 sec. system reset
- Power Supply
  12V DC input only (DC jack)
  Support AT/ATX mode
- Power Consumption
  12V@2.36A (Intel® Celeron® N3350 with 8GB 1600MHz DDR3L memory)
- Operating Temperature
  -20°C ~ 60°C
- Storage Temperature
  -30°C ~ 70°C
- Operating Humidity
  5% ~ 95%, non-condensing
- Dimensions
  100mm x 72mm
- Weight
  GW:600g/NW:250g
- CE/FCC compliant

Features

- PICO-ITX SBC supports Intel® 14nm Apollo Lake on-board SoC supports Intel® 14nm Apollo Lake on-board SoC
- Dual GbE LAN support
- Flexible expansion with M.2 A key 2230 and M.2 B key 2242 support
- HDMI and internal LVDS for independent display
- 12V only single voltage design for AT/ATX power by DC power jack

Dimensions *(Unit: mm)*

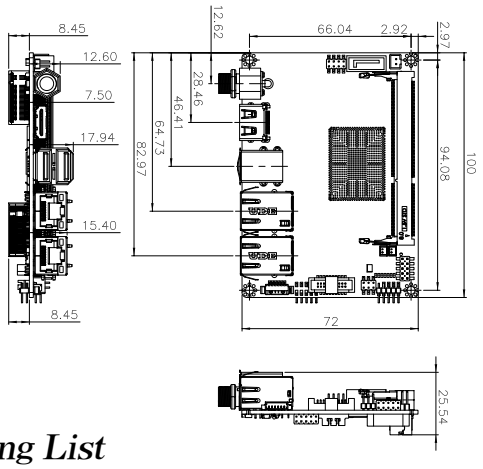

Packing List

1 x HYPER-AL single board computer (heat spreader by default)	
1 x COM port cable	1 x QIG (Quick Installation Guide)
1 x SATA cable kit	

Ordering Information

Part No.	Description
HYPER-AL-N1-R10	PICO-ITX SBC supports Intel® 14nm dual-core Celeron® N3350 2.4GHz on-board SoC with HDMI, LVDS, dual LAN, M.2, COM, USB 3.2 Gen 1 (5Gb/s), SATA 6GB/s and RoHS
34000-000706-RS	Optional fanless heatsink module, 100mm x 72mm x 20.5mm
32001-008600-200-RS	Dual port USB cable, 210mm, P=2.0
AC-KIT-892HD-R10	Realtek ALC892 (Colay ALC888) 7.1 Channel HD Audio peripheral board, RoHS

HYPER-BW

Pico-ITX SBC with Intel® 14nm Pentium®/Celeron® on-board SoC with dual Mini HDMI, M.2, GbE, USB 3.2 Gen 1 (5Gb/s), SATA 6Gb/s, COM, Audio and RoHS

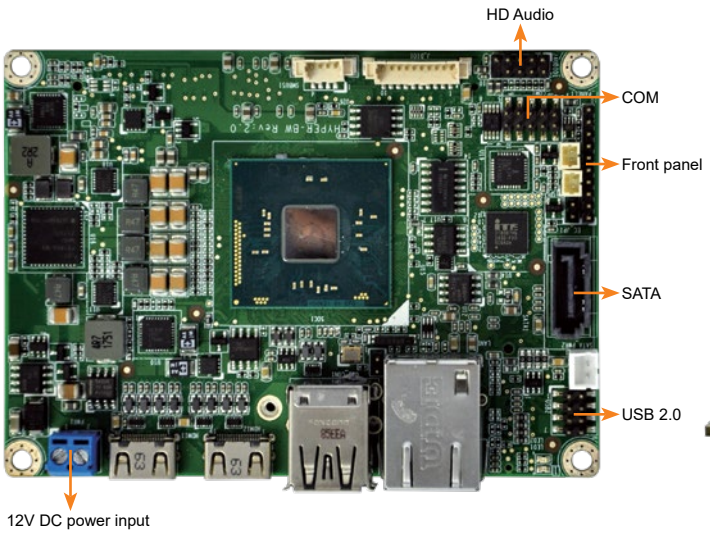

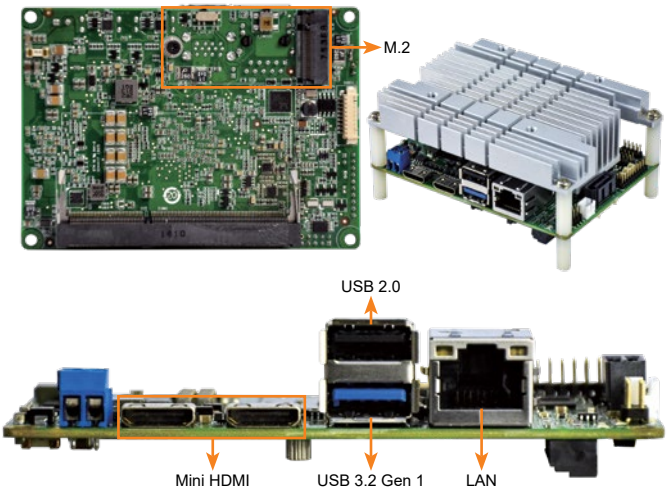



Specifications

- SoC
  Intel® Pentium® N3710 on-board SoC (up to 2.56GHz, quad-core, 2MB cache, TDP=6W)
  Intel® Celeron® N3160 on-board SoC (up to 2.24GHz, quad-core, 2MB cache, TDP=6W)
  Intel® Celeron® N3060 on-board SoC (up to 2.48GHz, dual-core, 2MB cache, TDP=6W)
  Intel® Celeron® N3010 on-board SoC (up to 2.24GHz, dual-core, 2MB cache, TDP=4W)
  Intel® Atom® x5-E8000 on-board SoC (up to 2.00 GHz, quad-core, 2M cache, TDP=5W)
- BIOS
  AMI UEFI BIOS
- Memory
  One 204-pin 1600/1333 MHz single-channel DDR3L SDRAM SO-DIMM slot supports up to 8 GB
- Graphics Engine
  Intel® HD Graphics Gen 8 Engine with 16 low-power execution units, supporting DX11.1, OpenGL 4.2 and OpenCL1.2
- Display Output
  Dual independent display
  2 x Mini HDMI (up to 3840x2160@30Hz)
- Ethernet
  LAN1: Realtek RTL8111 controller
- External I/O Interface
  1 x USB 2.0
  1 x USB 3.2 Gen 1 (5Gb/s)
- Internal I/O Interface
  1 x RS-232 (1x9 pin, P=1.25)
  1 x SATA 6Gb/s with 5V SATA power connector
  2 x USB 2.0 (2x4 pin, P=2.0)
- Audio
  1 x HD audio (2x5 pin, support 7.1 channel HD audio by IEI AC-KIT-888S-R10 kit)
- Front Panel
  1 x Front panel (1x10 pin, power LED, HDD LED, power buttom, reset buttom)
- LAN LED
  1 x LAN LED (1x2 pin)
- Expansion
  1 x M.2 2242 (B key)
- Digital I/O
  8-bit digital I/O (2x5 pin)
- Power Supply
  12V DC input only
  1 x Power terminal block (1x2 pin)
  Support AT/ATX mode
- Power Consumption
  12V@1.52A (Intel® Pentium® processor N3710 with 8 GB 1600 MHz DDR3L memory)
- Watchdog Timer
  Software programmable supports 1~255 sec. system reset
- Operating Temperature
  -20°C ~ 60°C
- Storage Temperature
  -30°C ~ 70°C
- Operating Humidity
  5% ~ 95%, non-condensing
- Dimensions
  100mm x 72mm
- Weight
  GW:600g/ NW:250g
- CE/FCC compliant

Features

- Pico-ITX SBC supports Intel® 14nm Pentium®/Celeron® on-board SoC
- IEI jumper-less function
- Dual independent display support
- 1333/1600 MHz 1.35V DDR3L SDRAM up to 8 GB supported
- COM, USB 3.2 Gen 1 (5Gb/s), SATA 6Gb/s and Audio support
- 1 x M.2 B key slot for expansion possibility

Packing List

1 x HYPER-BW single board computer with heatsink	1 x RS-232 cable
1 x SATA with power cable kit	1 x QIG

Ordering Information

Part No.	Description
HYPER-BW-N4-R20	Pico-ITX SBC with Intel® Pentium® 14nm quad-core N3710 up to 2.56GHz (6W) on-board SoC with dual Mini HDMI, PCIe GbE, M.2, USB 3.2 Gen 1 (5Gb/s), SATA 6Gb/s, COM, Audio and RoHS
HYPER-BW-N3-R20	Pico-ITX SBC with Intel® Celeron® 14nm quad-core N3160 up to 2.24GHz (6W) on-board SoC with dual Mini HDMI, PCIe GbE, M.2, USB 3.2 Gen 1 (5Gb/s), SATA 6Gb/s, COM, Audio and RoHS
HYPER-BW-N2-R20	Pico-ITX SBC with Intel® Celeron® 14nm dual-core N3060 up to 2.48GHz (6W) on-board SoC with dual Mini HDMI, PCIe GbE, M.2, USB 3.2 Gen 1 (5Gb/s), SATA 6Gb/s, COM, Audio and RoHS
HYPER-BW-N1-R20**	Pico-ITX SBC with Intel® Celeron® 14nm dual-core N3010 up to 2.24GHz (4W) on-board SoC with dual Mini HDMI, PCIe GbE, M.2, USB 3.2 Gen 1 (5Gb/s), SATA 6Gb/s, COM, Audio and RoHS
HYPER-BW-E8-R20	Pico-ITX SBC with Intel® Atom® 14nm quad-core x5-E8000 up to 2.00GHz (5W) on-board SoC with dual Mini HDMI, PCIe GbE, M.2, USB 3.2 Gen 1 (5Gb/s), SATA 6Gb/s, COM, Audio and RoHS
HYPER-BW-E8-ECO-R20	Pico-ITX SBC with Intel® Atom® 14nm quad-core x5-E8000 up to 2.00GHz (5W) on-board SoC with dual Mini HDMI, PCIe GbE, M.2, USB 3.2 Gen 1 (5Gb/s), SATA 6Gb/s, COM, Audio, ECO packing and RoHS (10 pcs/pack)
32001-008600-200-RS	Dual-port USB cable, 210mm, P=2.0
32102-045100-100-RS	DC JACK 5.5*2.5+NUT to open end power cable, 100mm
63040-010036-111-RS	12V 36W AC/DC adapter
AC-KIT-892HD-R10	Realtek ALC892 (Colay ALC888) 7.1 Channel HD Audio peripheral board, RoHS

**By order production, MOQ: 100

HYPER-BT

Pico-ITX SBC supports Intel® 22nm Atom™/Celeron® on-board SoC, DDR3L, VGA/iDP, GbE, USB 3.2 Gen 1 (5Gb/s), SATA 3Gb/s, HD Audio and RoHS

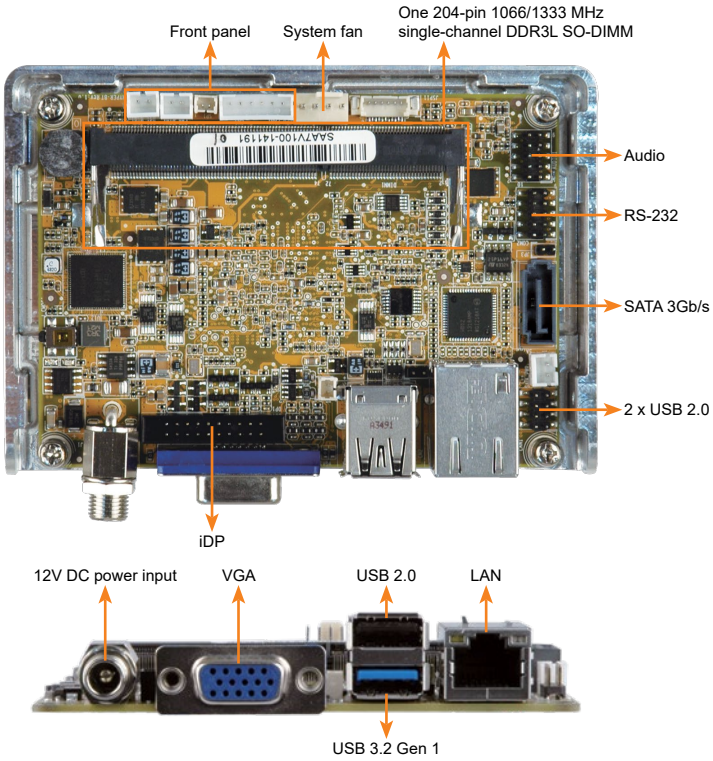

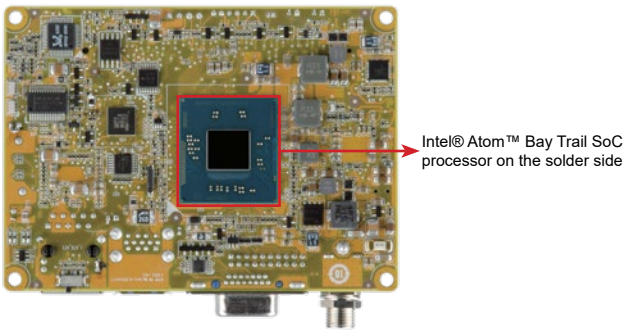

You can attach aluminum heat spreader directly to your construction for better heat dissipation

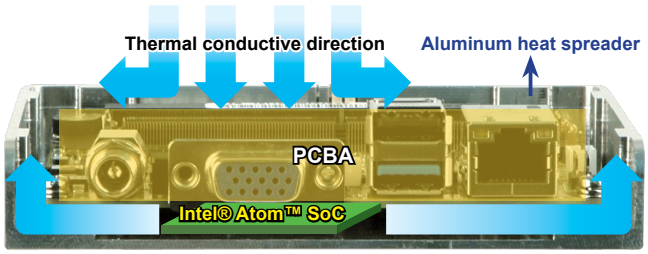

Specifications

- SoC
  Intel® Atom™ E3845 on-board SoC (1.91GHz, quad-core, 2MB cache, TDP=10W)
  Intel® Atom™ E3827 on-board SoC (1.75GHz, dual-core, 1MB cache, TDP=8W)
  Intel® Atom™ E3826 on-board SoC (1.46GHz, dual-core, 1MB cache, TDP=7W)
  Intel® Atom™ E3825 on-board SoC (1.33GHz, dual-core, 1MB cache, TDP=6W)
  Intel® Atom™ E3815 on-board SoC (1.46GHz, dual-core, 1MB cache, TDP=5W)
  Intel® Celeron® J1900 on-board SoC (2GHz, quad-core, 2MB cache, TDP=10W)
  Intel® Celeron® N2930 on-board SoC (1.83GHz, quad-core, 2MB cache, TDP=7.5W)
  Intel® Celeron® N2807 on-board SoC (1.58GHz, dual-core, 2MB cache, TDP=4.3W)
- BIOS
  AMI UEFI BIOS
- Memory
  One 204-pin 1066/1333 MHz single-channel DDR3L SO-DIMM supports up to 8 GB (J1900, N2930, E3845, E3827, E3826) or 4 GB (N2807, E3825, E3815)
- Graphics
  Intel® HD Graphics Gen 7 Engine with 4 execution units, supporting DX11.1 OpenGL 4.2 and OpenCL 1.2
- Display Output
  Dual independent display
  1 x VGA (up to 2560x1600@60Hz)
  1 x iDP interface for HDMI, LVDS, VGA, DVI, DP (up to 2560x1600@60Hz)
- Ethernet: LAN: Intel® I211-AT PCIe controller
- External I/O Interface
  1 x USB 2.0
  1 x USB 3.2 Gen 1 (5Gb/s)
- Internal I/O Interface
  1 x RS-232 (2x5 pin, P=2.0)
  1 x SATA 3Gb/s with 5V SATA power connector
  2 x USB 2.0 (2x4 pin, P=2.0)
- Audio: Realtek ALC888S HD Audio codec supports 7.1-channel
- Front Panel
  1 x Power LED & HDD LED (1x6 pin)
  1 x Power button (1x2 pin)
  1 x Reset button (1x2 pin)
- LAN LED: 1 x LAN LED (1x2 pin)
- Fan Connector: 1 x Smart fan connector (1x4 pin)
- Watchdog Timer: Software programmable, support 1~255 sec. system reset
- Power Supply
  12V only DC input
  1 x External DC power jack (ø5.5 mm)
  Support AT/ATX mode
- Power Consumption
  12V@1.35A (Intel® Celeron® J1900 with one 4 GB 1333 MHz DDR3 memory)
- Operating Temperature: -20°C ~ 60°C
- Storage Temperature: -30°C ~ 70°C
- Operating Humidity: 5% ~ 95%, non-condensing
- Dimensions (LxW)
  Single board: 100mm x 72mm / Heat spreader: 112mm x 78mm
- Weight: GW: 600g / NW: 250g
- CE/FCC compliant

Features

- Pico-ITX SBC supports Intel® 22nm Atom™ or Celeron® on-board SoC
- 12V only single voltage design for AT/ATX power by DC power jack
- VGA and iDP support dual display

Packing List

1 x HYPER-BT single board computer	
1 x Audio cable	1 x SATA with 5V output cable kit
1 x RS-232 cable	1 x QIG

Ordering Information

Part No.	Description
HYPER-BT-J19001-R10	PICO-ITX SBC supports Intel® Celeron® quad-core J1900 (10W) on-board SoC with DDR3L, VGA/iDP, GbE, USB 3.2 Gen 1 (5Gb/s), SATA 3Gb/s, Audio and RoHS
HYPER-BT-N29301-R10	PICO-ITX SBC supports Intel® Celeron® quad-core N2930 (7.5W) on-board SoC with DDR3L, VGA/iDP, GbE, USB 3.2 Gen 1 (5Gb/s), SATA 3Gb/s, Audio and RoHS
HYPER-BT-N28071-R10	PICO-ITX SBC supports Intel® Celeron® dual-core N2807 (4.3W) on-board SoC with DDR3L, VGA/iDP, GbE, USB 3.2 Gen 1 (5Gb/s), SATA 3Gb/s, Audio and RoHS
HYPER-BT-E38XX1-R10**	PICO-ITX SBC supports Intel® Atom™ E38XX on-board SoC with DDR3L, VGA/iDP, GbE, USB 2.0, SATA 3Gb/s, Audio and RoHS
32001-008600-200-RS	Dual-port USB cable, 210mm, P=2.0
32006-000300-100-RS	PS/2 KB/MS Y-cable without bracket, 140mm/120mm
32200-000049-RS	RS-232 cable, 240mm, P=2.0
DP-DP-R10	DisplayPort to DisplayPort converter board (for IEI iDP connector)
DP-DVI-R10	DisplayPort to DVI-D converter board (for IEI iDP connector)
DP-HDMI-R10	DisplayPort to HDMI converter board (for IEI iDP connector)
DP-LVDS-R10	DisplayPort to LVDS converter borad (for IEI iDP connector)
DP-VGA-R10	DisplayPort to VGA converter board (for IEI iDP connector)

**By order production, MOQ: 100

HYPER Dimensions (Unit: mm)

HYPER-BW

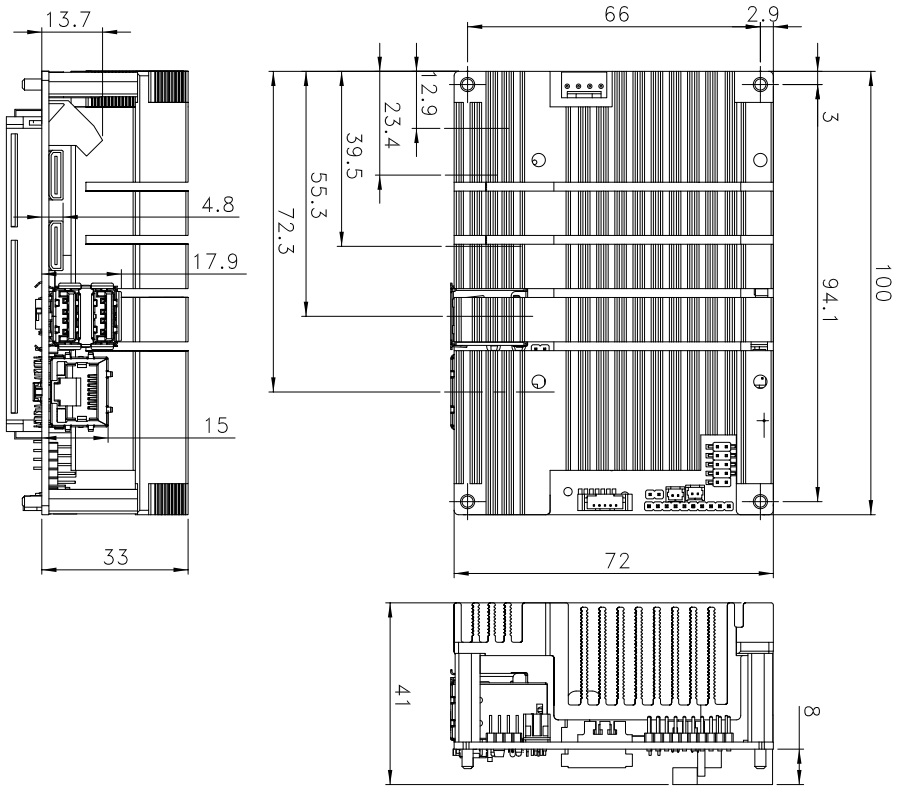

HYPER-BT

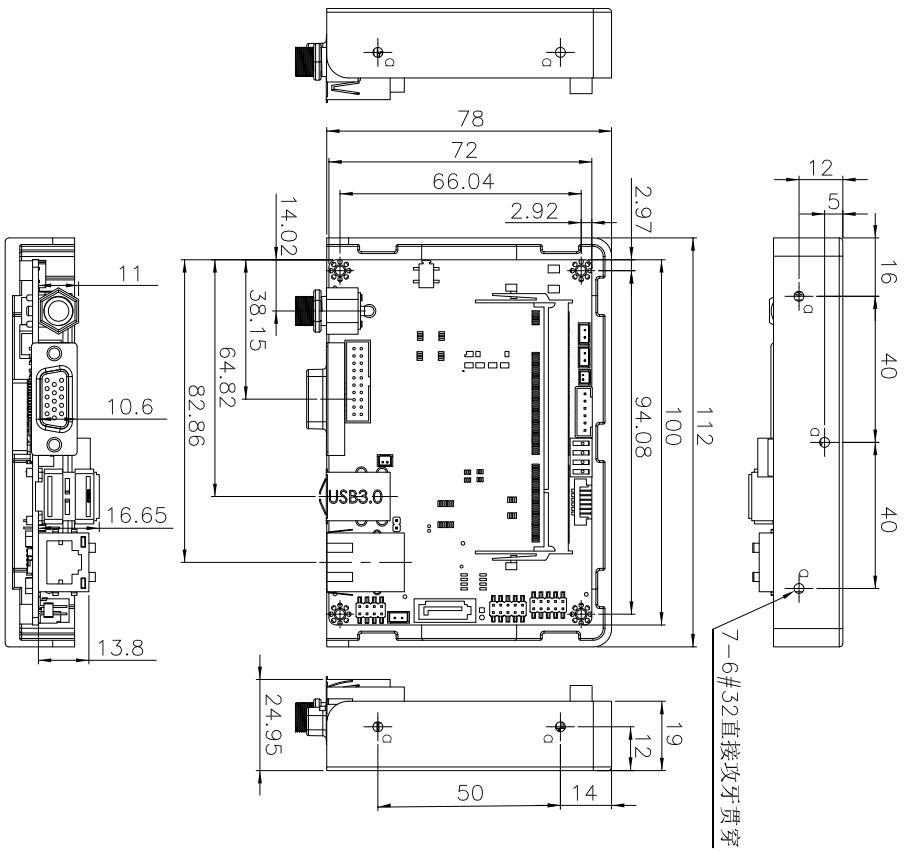

IEI Computer on Modules

A computer-on-module (COM) is a type of single-board computer (SBC), a subtype of an embedded computer system. An extension of the concept of system on chip (SoC) and system in package (SiP), COM lies between a full-up computer and a microcontroller in nature.

Design

Computer-on-modules are complete embedded computers built on a single circuit board. The design is centered on a CPU or a microprocessor with RAM, input/output controllers and all other features needed to be a functional computer on the one board. However, unlike a single-board computer, the Computer-on-module will usually lack the standard connectors for any input/output peripherals to be attached directly to the board.

The module will usually need to be mounted on a carrier board (or baseboard) which breaks the bus out to standard peripheral connectors. Some Computer-on-modules also include peripheral connectors and/or can be used without a carrier.

A Computer-on-module solution offers a dense package computer system for use in small or specialized applications requiring low power consumption or small physical size as is needed in embedded systems.

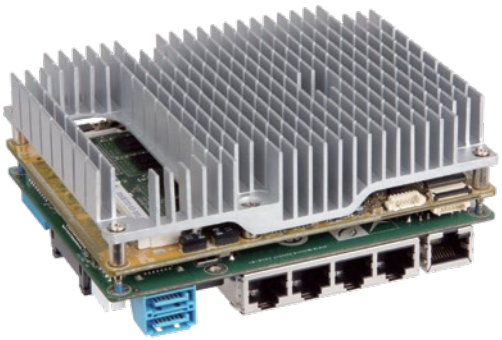

Typical Applications

High Density



Smart Camera



Speed Camera



Mobile Device

Automation & Robot Controller



Robot Controller



CNC

IEI Computer on Module Form Factors

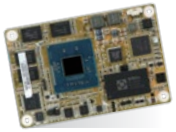



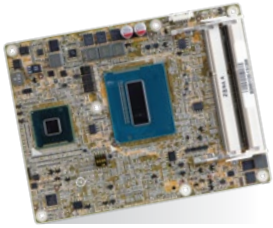





COM Express Type 10	COM Express Type 6	COM Express Type 6	COM Express Type 7	Qseven 2.0
Mini: 84 mm x 55 mm	Compact: 95 mm x 95 mm	Basic: 125 mm x 95 mm	Basic: 125 mm x 95 mm	70 mm x 70 mm

Computer on Module Selection Guide








Computer on Module	COM Express Type 10	COM Express Type 7	COM Express Type 6	COM Express Type 6	Qseven 2.0
COM Express Size	Mini: 84 mm x 55 mm	Basic: 125 mm x 95 mm	Compact: 95 mm x 95 mm	Basic: 125 mm x 95 mm	70 mm x 70 mm
Model Name	**ICE-BT-T10W2**	**ICE-DN-T7**	**ICE-ULT3**	**ICE-BT-T6**	**iQ7-BT-E38001 iQ7-BT-E38001W2**
CPU Socket	On board	On Board	On board	On board	On board
CPU Type	Intel® Atom™/Celeron® on-board SoC	Intel® Atom™C3000/C3000R® Onboard SoC	Intel® Skylake ULT on-board SoC	Intel® Atom™/Celeron® on-board SoC	Intel® Atom™/Celeron® on-board SoC
Chipset	Intel® Atom™/Celeron® on-board SoC	Intel® Atom™C3000/C3000R® Onboard SoC	Intel® Skylake ULT	Intel® Atom™/Celeron® on-board SoC	Intel® Atom™/Celeron® on-board SoC
Memory	2 GB soldered down 1066/1333 MHz DDR3L memory (up to 8 GB)	Four 260-pin 2400 MHz Dual-Channel DDR4 SDRAM supported Support ECC (system max. 128GB)	Two 260-pin 2133/1867 MHz dual-channel DDR4 SDRAM Unbuffered DIMM supported (system max. 32GB)	Two 204-pin 1066/1333 MHz dual-channel DDR3L SO-DIMM supported (system max. 8 GB)	2 GB soldered down 1066/1333 MHz DDR3L memory (up to 4 GB)
Display Interface	Dual display supported 1 x VGA 1 x DDI 1 x eDP	N/A	Tripal display supported 2 x DDI: DisplayPort/HDMI/DVI 1 x DDI: Embedded DP (Option with 1 x Dual Channel LVDS 18/24 bit via CH7511B)	Dual display supported 1 x VGA 1 x DDI 1 x 18/24-bit dual-channel LVDS	Dual display supported 1 x DDI 1 x 18/24-bit dual-channel LVDS
Ethernet	LAN1: Intel® I210 PCIe controller	4 x 10GBASE-KR	LAN1: Intel® I219LM	LAN1: Intel® I210 PCIe controller	LAN1: Intel® I210 PCIe controller
I/O Interface	1 x I²C 1 x SMBus 1 x LPC 1 x USB 3.2 Gen 1 2 x Serial port (TX & RX) 4 x USB 2.0	1 x I²C 1 x SMBus 1 x LPC 2 x Serial port (TX & RX) 4 x USB 3.2 Gen 1 4 x USB 2.0	2 x RS-232 (2-Wire) to base board 4 x USB 2.0 to base board 4 x USB 3.2 Gen 1 to base board (with 4 x USB 2.0)	1 x I²C 1 x LPC 1 x SMBus 2 x Serial port (TX & RX) 4 x USB 3.2 Gen 1 7 x USB 2.0	1 x LPC 1 x SDIO 1 x SMBus 1 x USB 3.2 Gen 1 3 x I²C 6 x USB 2.0
Storage Interface	2 x SATA 3Gb/s Optional soldered down SSD up to 64 GB (SATA port 1)	2 x SATA 3Gb/s Optional soldered down eMMC 5.1 up to 128 GB (SATA port 1)	2 x SATA 6Gb/s signal to base board eMMC 5.0 (optional)	2 x SATA 3Gb/s Optional soldered down SSD up to 64 GB (SATA port 1)	2 x SATA 3Gb/s Optional soldered down SSD up to 64 GB (SATA port 1)
Audio	High-definition Audio interface	N/A	High-definition Audio interface		
Power Consumption	12V@0.43A, Vcore_12V@0.9 A (Intel® Atom™ E3845 CPU with 2 GB 1333 MHz DDR3L memory)	TBD	12V@2.57A, 5VSB@0.04A, 5V@0.02A (Intel® Core™ i7-6600U with two 8GB 2400 MHz DDR4 memory)	12V@0.54A, Vcore_12V@0.95A (Intel® Celeron® J1900 CPU with two 8 GB 1333 MHz DDR3 memory)	3.3V@0.13A, 5V@0.13A, 12V@1.35A, 5VSB@0.12A (Intel® Atom™ E3845 CPU with 2 GB on-board memory)
Watchdog Timer	Software programmable and supports 1~255 sec. system reset				
Operation Enviornment	Temperature Range: -20°C ~ 60°C -40°C ~ 85°C (ICE-BT-10-E38001W2) Relative Humidity: 10% ~ 95% non-condensing	Operating Temperature: -20°C ~ 60°C Operating Humidity: 5% ~ 95%, non-condensing	Operating Temperature: -20°C ~ 60°C Operating Humidity: 5% ~ 95%, non-condensing	Temperature Range: -20°C ~ 60°C Relative Humidity: 10% ~ 95% non-condensing	Temperature Range: -20°C ~ 60°C -40°C ~ 85°C (iQ7-BT-E38001W2) Relative Humidity: 10% ~ 95% non-condensing
Expansion Slot	3 x PCIe x1 signal to baseboard	11 x PCIe x1 signal to baseboard 1 x PCIe x 4 signal to baseboard	1 x PCIe x1 signal to baseboard (Via PCIe x16 channel) 8 x PCIe x1 signal to baseboard	5 x PCIe x1 signal to baseboard	3 x PCIe x1 signal to baseboard

IEI COM Express Series

COM Express is a computer-on-module (COM) form factor series. It can be integrated in various customized applications. Each COM Express module integrates CPU, memory and common I/O of a PC/AT including USB, audio, graphics, and Ethernet. All I/O signals are mapped to two high density, low profile connectors on the bottom side of the module. The COM Express specification is hosted by PICMG. The ICE (IEI COM Express) modules provide complete performance range for users to choose. With the IEI COM Express baseboard deign service, users can quickly enjoy the benefits of modulization and efficiency.

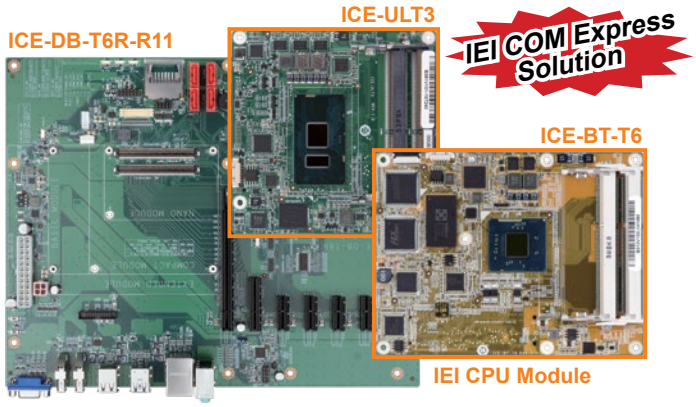

Transfer your ETX Module to IEI COM Express Solution

COM Express provides PCI Express, dual-channel LVDS, GbE, eight USB and four SATA ports for I/O expansion

Platform	ETX	COM Express Type 2 Basic Module
Size	95 mm x 114 mm	95 mm x 125 mm
VGA	Yes	Yes
LCD	TTL or LVDS	Up to 2 x single LVDS or dual-channel LVDS
SDVO	N/A	Up to 2 SDVO (shared with PCIe x16)
Expansion	PCI & ISA	PCIe & PCI
Ethernet	10/100 Mbps	10/100/1000 Mbps
USB	Up to 4 ports	Up to 8 ports
SATA	Up to 2 Ports (ETX 3.0 only)	Up to 4 SATA
IDE	Up to 2 channels	Up to 1 channel

COM Express Pinout Types

COM Express, a computer-on-module (COM) form factor, is a highly integrated and compact PC that can be used in a design application much like an integrated circuit component. Each COM Express Module COM integrates core CPU and memory functionality, the common I/O of a PC/AT, USB, audio, graphics (PEG), and Ethernet. All I/O signals are mapped to two high density, low profile connectors on the bottom side of the module.

Types

The COM Express specification is hosted by PICMG. There are seven different pinouts defined in the specification. The most common used pinouts are Type 6 and Type 10 in the revision 2.0 of the COM Express specification. The latest pinouts added in the revision 3.0 of the COM Express specification is Type 7.

Types	PCIe Lanes	PEG/SDVO	Display	SATA	1GbE/10GbE	PCI	IDE	USB 2.0	USB 3.2 Gen 1
Type 1	Up to 6	×	VGA, LVDS	4	1/0	×	×	8	×
Type 10	Up to 4	/1	DDI, LVDS	2	1/0	×	×	8	2
Type 2	Up to 22	1/2	VGA, LVDS, PEG, SDVO	4	1/0	✓	×	8	×
Type 6	Up to 24	1/	VGA, LVDS, PEG, 3 x DDI	4	1/0	×	×	8	4
Type 7	Up to 32	2	NA	2	1/4	×	×	4	4

The Specification Defines Three Module Sizes:

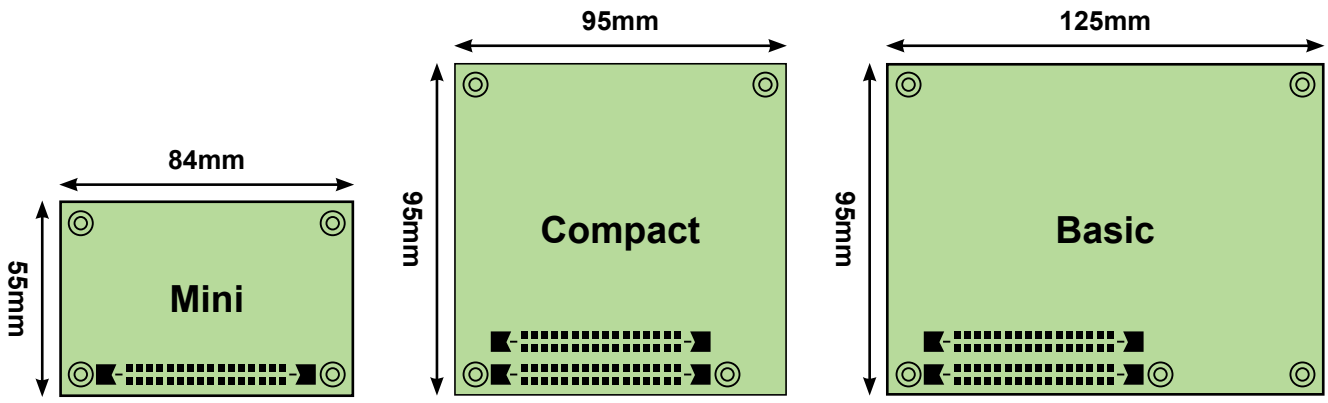

Mini: 84 x 55 mm
For Type 1 and Type 10 pinout

Compact: 95 x 95 mm
For Type 2 and Type 6 pinout

Basic: 125 x 95 mm
For Type 2, Type6 and Type 7 pinout

◆ Pinout Comparison of Type 10

Type 10 Pinout

B	LPC SMB I²C	2 ports SATA	2 ports USB 3.2 Gen 1	Audio	8 ports USB 2.0	4 lanes PCIe x1	Reserve Pin	DDI		5VSB	12V	
A	GBE							LVDS A	Others	SPI	2 ports serial	12V

◆ Pinout Comparison of Type 6 and Type 7

Type 6 Pinout

D C	4 ports USB 3.2 Gen 1/2.0	2 lanes PCIe x 1	DDI 1	DDI 2	DDI 3	PCIe x16	12V

B	LPC SMB I²C	4 ports SATA	Audio	8 ports USB 2.0	6 lanes PCIe x1	LVDS B	VGA	5VSB	12V	
A	GBE					LVDS A	Others	SPI	2 ports serial TPM	12V

Type 7 Pinout

D C	4 ports USB 3.2 Gen 1/2.0	2 lanes PCIe x 1	4 x 10GbE LAN			PCIe x16				12V	
B	LPC/eSPI	2 ports SATA	2 lanes PCIe x1	Reserve Pin	4 ports USB 2.0	2 lanes PCIe x1	6 lanes PCIe x1	4 lanes PCIe x1	NCSI	5VSB	12V
A	GBE								Others	SPI	2 ports serial TPM	12V

■ Installing the COM Express

◆ Thermal Design of COM Express

COM Express definition includes a heatspreader that acts as a thermal interface between the COM Express module and the system's cooling solution. The height of a COM Express module, including the heatspreader, has been defined as 18 mm and covers the complete area of the COM Express. All heat generating components are thermally conducted to the heatspreader in order to avoid hot spots.

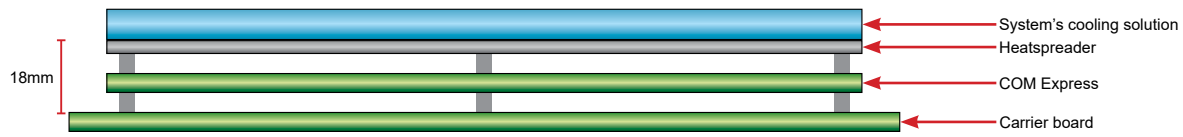

1. Installing the COM Express

Firmly insert the COM Express into the COM Express socket.

2. Installing the heatspreader

A heatspreader must be installed on the COM Express. Thermal pads must be smeared on the lower side of the heatspreader before it is mounted on the COM Express. Heatspreaders are mounted on the CPU, Northbridge and Southbridge chipsets to ensure the operating temperature of these chips remain low.

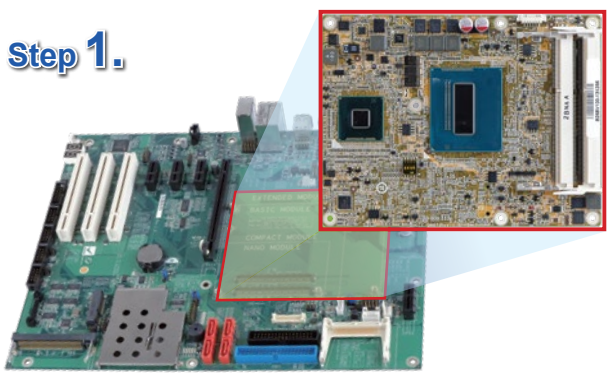

▲ Installing the COM Express

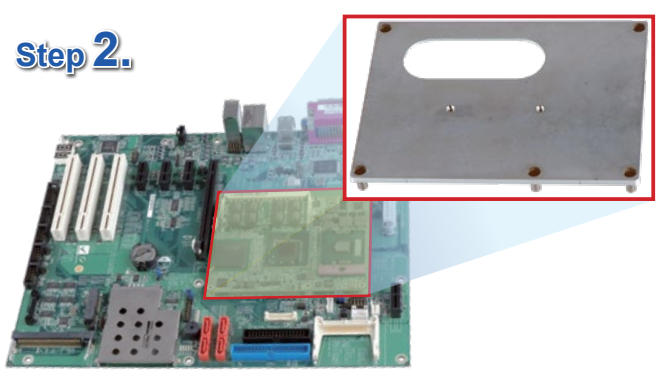

▲ Installing the heatspreader

3. Installing the system's cooling solution

In addition to the heatspreader, COM Express needs another heatsink or other thermal solution to cool down the COM Express.

Before iinstalling the system's cooling solution, make sure that you have properly applied thermal interface material to the heatspreader.

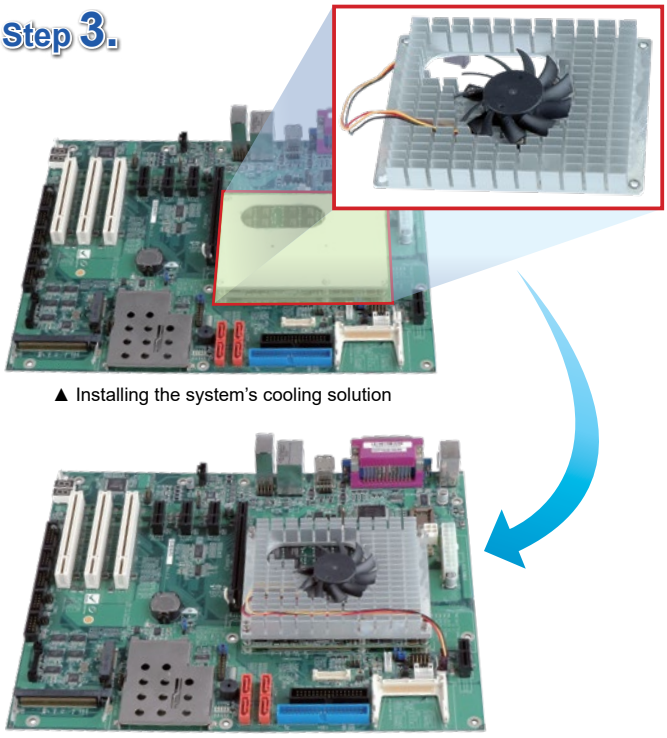

▲ Installing the system's cooling solution

Operating Temperature

The maximum and minimum operating temperatures for the standard COM Express are listed below.

- Minimum Operating Temperature: 0°C (32°F)
- Maximum Operating Temperature: 60°C (140°F)

WARNING:

Never run the embedded module without the heat sink. The heatspreader plate shipped with the COM Express acts as a thermal interface between the module and the heat sink. The heat sink must be installed on the heatspreader plate to maintain proper operating temperatures. Make sure to maintain the heatspreader plate temperature under 60°C in operation.

Benefits

A: High Compatibility

- IEI ICE modules follow standard COM Express design guide and have high compatibility
- ICE modules are compatible with all baseboards compliant with COM Express specifications
- Complete performance level for customers' choice

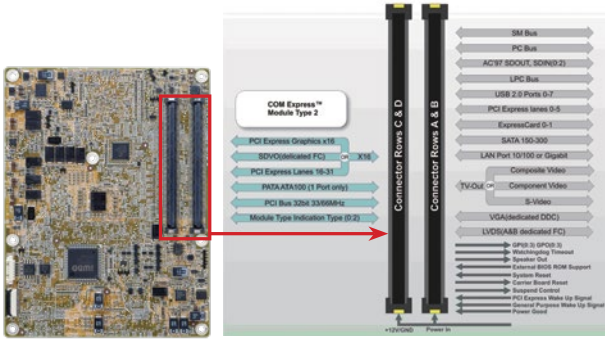

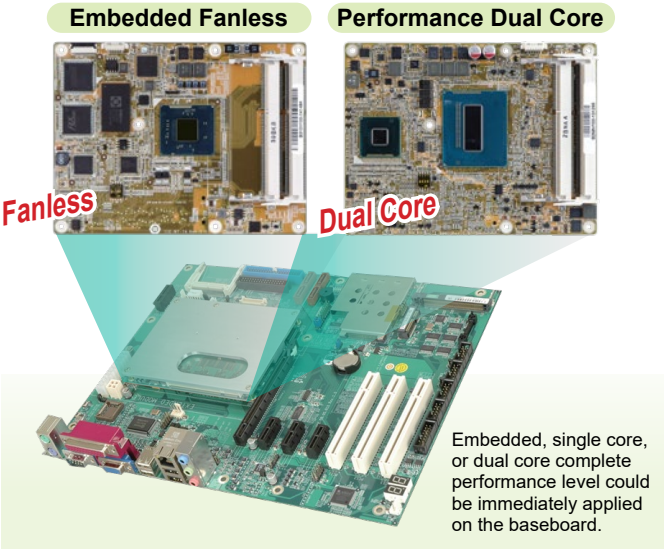

Embedded, single core, or dual core complete performance level could be immediately applied on the baseboard.

B: Strong Support

- With strong R&D resources, IEI provides customers innovative leading products and service to drive successful experience.
- IEI provides complete turnkey solutions from hardware, software and industrial BIOS design support.

R&D Support Service

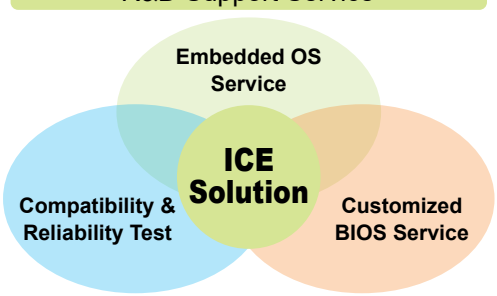

R&D Support Team

ME & ID Team
- CNC, laser cutting
- Die-cast, punch-press
- Plastic hard-tooling
- Rapid prototyping
- NEMA4/IP65 enclosure
- Customization
- Accessories: VESA arm, rack mount, DIN-rail mount kit

SW Team
- BIOS: Phoenix/Award/AMI
- Windows® CE driver
- Digital Signage SW
- HMI SW

Intelligent Team
- Automobile devices SW, HW
- System integration
- Test and verification

Project Management Team

EE Team
- Schematic design
- Power circuit plan
- Layout design

Medical Team
- Medical products SW, HW
- IC design, test and verification

DQV Team
- Product validation
- Environmental testing
- Compatibility testing
- Reliability testing/prediction

Support Team
- EMC/Safety service (FCC, UL, CSA, CE..)
- Key parts/Component verification team

TYPE10

ICE-BT-T10W2

COM Express Rev 2.1 Mini Size Type 10 Module, Intel® 4th Generation Atom™ Processor, VGA, DDI, GbE, SATA 3Gb/s, USB and Audio, -40°C to +85°C and RoHS

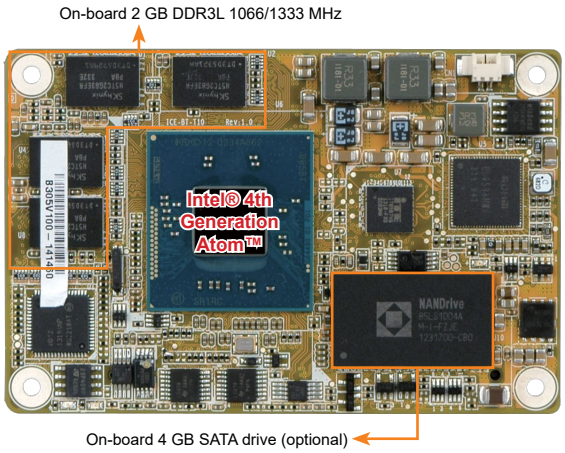

The one-piece heatsink for COM Express Type 10 provides better thermal solution

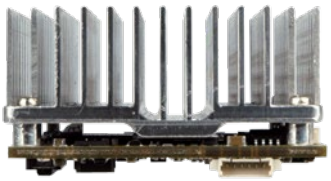









Specifications

- CPU
  Intel® Atom™ E3845 on-board SoC (1.91GHz, quad-core, 2MB cache, TDP=10W)
  Intel® Atom™ E3825 on-board SoC (1.33GHz, dual-core, 1MB cache, TDP=6W)
  Intel® Atom™ E3815 on-board SoC (1.46GHz, single-core, 512KB cache, TDP=5W)
- Memory
  2 GB soldered down 1066/1333 MHz DDR3L memory (up to 8 GB)
- BIOS
  UEFI BIOS
- Graphics Engine
  Intel® HD Graphics Gen 7 Engine with 4 execution units, supports DX11.1, OpenGL 4.2 and OpenCL1.2
- Display Output
  1 x VGA (up to 2560x1600@60Hz)
  1 x DDI: DisplayPort/HDMI/DVI (DP up to 2560x1600@60Hz / HDMI up to 1920x1080@60Hz)
  1 x DDI: Embedded DP (up to 2560x1600@60Hz)
- Ethernet
  Intel® I210-AT GbE controller (Intel® I210-IT GbE controller with W2 sku)
- Storage
  2 x SATA 3Gb/s signal to baseboard
  Optional soldered down SSD up to 64 GB (SATA port 1)
- I/O Interface
  4 x USB 2.0 signal to baseboard
  1 x USB 3.2 Gen 1 (5Gb/s) signal to baseboard
- Audio
  High-definition Audio interface to baseboard
- GPIO
  Yes, to baseboard
- SMBus
  Yes, to baseboard
- I²C
  Yes, to baseboard
- LPC
  Yes, to baseboard
- SPI
  Yes, to baseboard
- Internal Storage
  2-Kb serial I²C bus EEPROM supports EAPI Rev. 1.0
- Serial Port
  Two serial ports to baseboard (TX & RX from EC)
- Expansion
  3 x PCIe x1 signal to baseboard
- Watchdog Timer
  Software programmable, supports 1~255 sec. system reset (from EC)
- Power Consumption
  12V@0.43A, Vcore_12V@0.9 A (Intel® Atom™ E3845 CPU, 2 GB 1333 MHz DDR3L memory)
- Operating Temperature
  -40°C ~ 85°C
- Storage Temperature
  -40°C ~ 85°C
- Operating Humidity
  5% ~ 95%, non-condensing
- Dimensions
  84 mm x 55 mm (mini size)
- Weight
  GW: 300g / NW: 150g
- CE/FCC compliant

Features

- Intel® 22nm Atom™ on-board SoC supported
- Type 10 connector pinout according to COM.0 R2.1
- Supports 2 GB 1066/1333 MHz DDR3L memory
- Optional soldered down 4 GB SSD
- Support wide range operating temperature: -40°C to +85°C

Dimensions *(Unit: mm)*

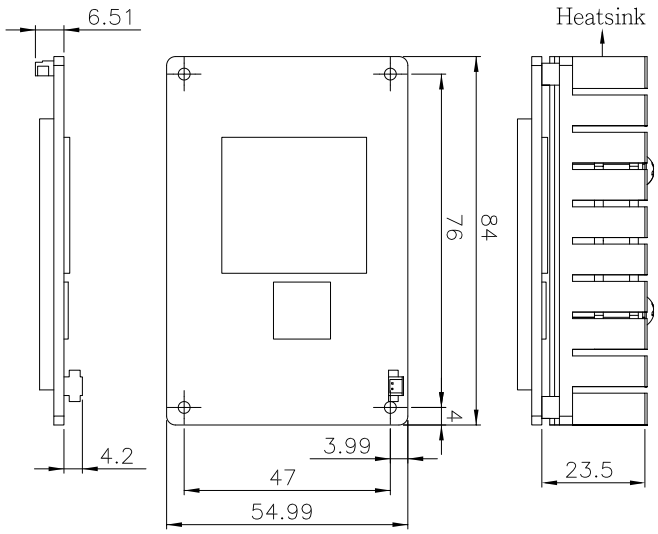

Packing List

1 x ICE-BT-T10 single board computer	
1 x Heatsink	1 x QIG

Ordering Information

Part No.	Description
ICE-BT-T10-E38451W2-R11	COM Express Basic Type 10 module supports Intel® Atom™ processor E3845 (quad core, 10W), on-board 2 GB DDR3L, VGA, DDI, GbE, USB 3.2 Gen 1 (5Gb/s) ,SATA and HD Audio, -40°C ~ 85°C and RoHS
ICE-BT-T10-E38251W2-R11	COM Express Basic Type 10 module supports Intel® Atom™ processor E3825 (dual core, 6W), on-board 2 GB DDR3L, VGA, DDI, GbE, SATA, USB 3.2 Gen 1 (5Gb/s) and HD Audio, -40°C ~ 85°C and RoHS
ICE-DB-T10-R10	Baseboard for COM Express Type 10 module COM.0 Rev. 2.1, supports PICMG EAPI R1.0

Note: Models with other CPUs not listed in the table are requested by MOQ - 100 pcs/lot.

TYPE 7

ICE-DN-T7

COM Express Basic size Type 7 Module,Intel® Atom™ C3000 Series processor, GbE, 4 x 10G KR, NCSI, SATA 6GB/s, USB 3.0, PCIe Gen3, RoHS

New

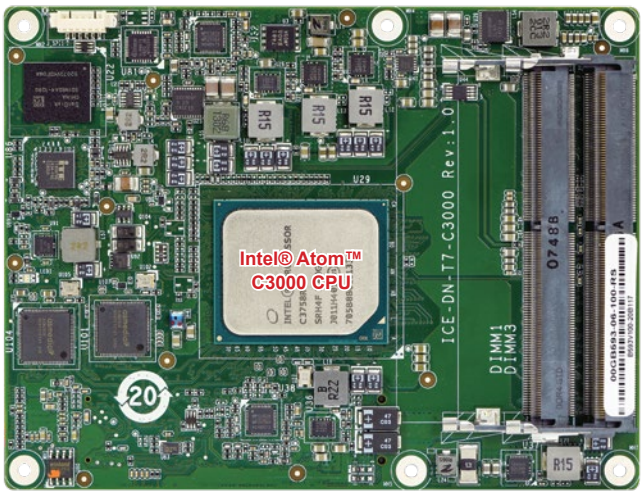

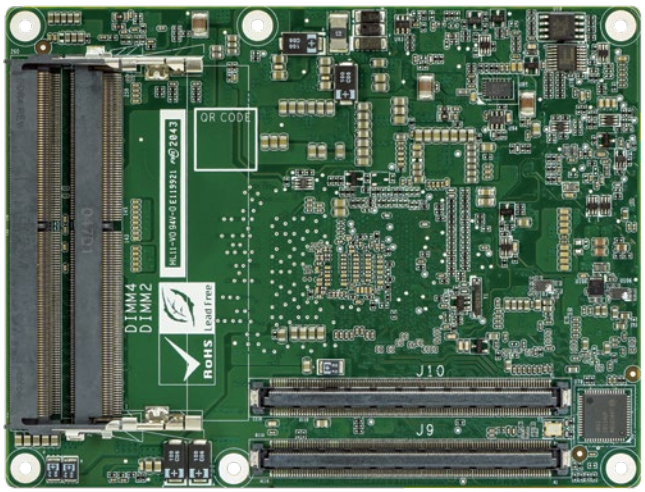

Specifications

- Form Factor
  PICMG COM.0 R3.0 Basic Type 7 (125mm x 95mm)
- CPU
  Intel® Atom™ C3000 series processor
- Memory
  Four 260-pin 2400 MHz Dual-Channel DDR4 SDRAM supported
  Support ECC (system max. 128GB)
- BIOS
  UEFI BIOS
- Ethernet
  Up to 4x 10GbE with KR interface support
  (10G_INT 10G_PHY_MDC/MDIO 10G_PHY_SEL 10G_PHY_RST 10G_LED_I2C 10G_SFP_I2C 10G_SDP)
  1 x Gigabit Ethernet with Intel® I210-AT
- Embedded Controller
  IT8528EFX
- I/O
  2 x RS-232 (2-Wire) to base board
  2 x SATA 6GB/s signal to base board
  2 x USB 3.0 to base board
  4 x USB 2.0 to base board
- SMBus/JTAG
  Yes, to base board
- JTAG
  On board
- SPI
  On board connector
  To base board
- I²C
  Yes, to base board
- LPC
  Yes, to base board
- Expansion
  Up to 2 x PCIe Gen3 x4; Via AB & CD connector Lanes #0-3 #16-19, (x4, x2 or x1)
  Up to 3 x PCIe Gen3 x2; Via AB & CD connector, Lanes #4-5 #6-7 # 8-9 (x2 or x1),
  3 x PCIe x1 Gen3 x1 only; Via AB & CD Lanes #12 #20 #24
- eMMC 5.1
  128GB MLC (Optional)
- Watchdog Timer
  Software programmable support 1~255 sec. system reset
- GPIO
  8 bit GPIO, to base board
- TPM
  On board SPI TPM 2.0 (Optional)
- Power Supply
  12V: 12V±5%, 5VSB: 5V±5%, RTC Battery: 2.0-3.3V 8.5V~20V
- Power Consumption
  TBD
- Operating Temperature
  -20°C ~ 60°C with air flow
- Operating Humidity
  5% ~ 95%, non-condensing
- Dimensions
  125 mm x 95 mm
- Weight
  GW: 600g/ NW:300g
- CE/FCC compliant

Features

- Intel® Atom™ C3000 series processor (up to 16 cores)
- Up to 128GB dual channel DDR4 at 2400MHz ECC (dependent on SoC SKU)
- Four 10G Ethernet and NC-SI support
- Totoal 18 PCIe lanes (dependent on SoC SKU)
- GbE, two SATA 6 Gb/s, four USB 3.0/2.0

Dimensions *(Unit: mm)*

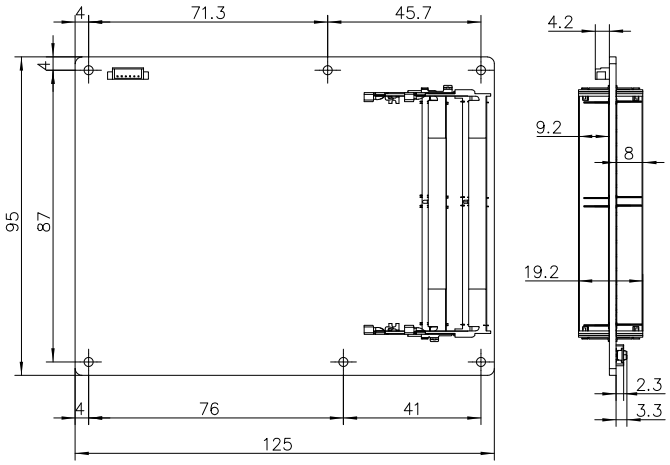

Packing List

1 x ICE-DN-T7 single board computer	
1 x Heatsink	1 x QIG

Ordering Information

Part No.	Description
ICE-DN-T7-C3958-R10	COM Express Basic size Type 7 Module, Intel® Atom™ C3958 (31W) on-board processor, with GbE, 4 x 10G KR, NCSI, SATA 6GB/s, USB 3.0, PCIe Gen3, RoHS
ICE-DN-T7-C3758-R10	COM Express Basic size Type 7 Module, Intel® Atom™ C3758 (25W) on-board processor, with GbE, 4 x 10G KR, NCSI, SATA 6GB/s, USB 3.0, PCIe Gen3, RoHS
ICE-DN-T7-C3558-R10	COM Express Basic size Type 7 Module, Intel® Atom™ C3558 (15W) on-board processor, with GbE, 4 x 10G KR, NCSI, SATA 6GB/s, USB 3.0, PCIe Gen3, RoHS
ICE-DN-T7-C3338-R10	COM Express Basic size Type 7 Module, Intel® Atom™ C3338 (8.5W) on-board processor, with GbE, 1 x 10G KR, NCSI, SATA 6GB/s, USB 3.0, PCIe Gen3, RoHS

TYPE 6

ICE-ULT3

COM Express Compact size Type 6 Module, 6th Generation Intel® Core™ ULT Processor, DDR4, VGA, LVDS, DDI, GbE, SATA 6Gb/s, USB 3.2 Gen 1 (5Gb/s) and HD Audio, RoHS

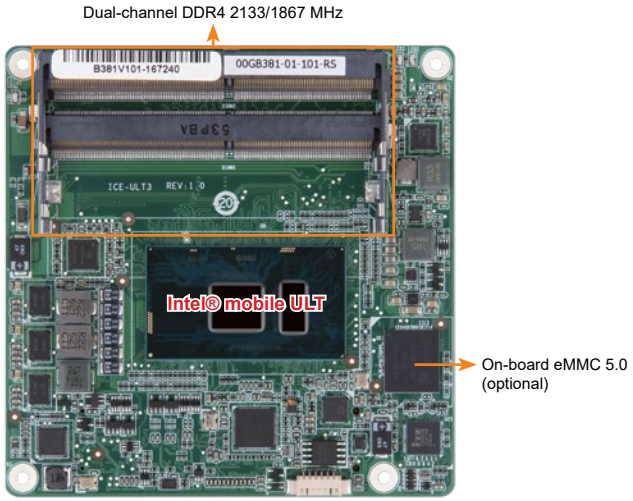



One piece heat sink for COM Express Basic Size provides better thermal solution

DDR4 2133 | Triple Display | USB 3.2 | SATA 6Gb/s | GbE

Specifications

- CPU
  6th generation Intel® mobile ULT on-board SoC
  Intel® Core™ i7-6600U (up to 3.4GHz, dual-core, 4MB cache, TDP=15W)
  Intel® Core™ i3-6100U (up to 2.3GHz, dual-core, 3MB cache, TDP=15W)
  Intel® Celeron® processor 3955U (up to 2.0GHz, dual-core, 2MB cache, TDP=15W)
- Memory
  Two 260-pin 2133/1866 MHz dual-channel DDR4 non-ECC unbuffered SO-DIMMs support up to 32GB
- BIOS
  UEFI BIOS
- Graphic Engine
  Intel® HD Graphics Gen 9 support for DX11/12, OCL 2.x, OGL 4.3/4.4, ES 2.0
  Decode/Encode for HEVC, VP8, VP9 2 ,VDENC
- Display Output
  1 x DDI: DisplayPort/HDMI/DVI (up to 3840x2160@60Hz)
  1 x DDI: DP to VGA via CH7517
  (1 x Optional DisplayPort / HDMI/DVI up to 1920x1200@60Hz)
  1 x DDI: Embedded DP (up to 3840x2160@60Hz)
  (Option with 1 x Dual Channel LVDS 18/24 bit via CH7511B)
  (up to 1920x1200@60Hz)
- Ethernet
  Intel® Clarkville-V I219LM Support Intel® AMT 11.0
- I/O Interface
  2 x RS-232 (2-Wire) to base board
  4 x USB 2.0 to base board
  4 x USB 3.2 Gen 1 (5Gb/s) to base board (with 4 x USB 2.0)
  2 x SATA 6Gb/s signal to base board
- Audio
  High definition audio interface
- SMBus
  YES, to base board
- I²C
  YES, to base board
- LPC
  YES, to base board
- Expansion
  1 x PCIe x1 signal to base board (Via PCIe x16 channel)
  8 x PCIe x1 signal to base board
- Watchdog Timer
  Software programmable, supports 1~255 sec. system reset
- eMMC
  eMMC 5.0 (optional)
- GPIO
  8 bit GPIO, to base board
- TPM
  Through base board
- Power Supply
  12V: 12V±5%, 5VSB: 5V±5%, RTC Battery: 2.0-3.3V
- Power Consumption
  +12V@2.57A, 5VSB@0.04A, 5V@0.02A
  (Intel® Core™ i7-6600U with two 8GB 2400 MHz DDR4 memory)
- Operating Temperature
  -20°C ~ 65°C
- Operating Humidity
  5% ~ 95%, non-condensing
- Diemension
  95 mm x 95 mm
- Weight
  GW: 600g / NW: 250g
- CE/FCC compliant

Features

- Intel® Skylake ULT Processors supported
- Intel® HD Graphics technology integrates high-performance graphics and media processing
- Two 260-pin 2133/1867 MHz Dual-Channel DDR4 SDRAM Unbuffered DIMM supported (system max. 32GB)
- 18/24-bit dual-channel LVDS, analog CRT, DDI supported
- Support Intel® AMT 11.0

Dimensions (Unit: mm)

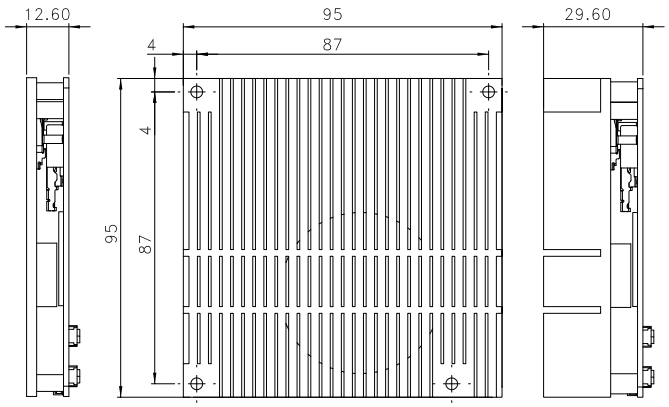

Packing List

1 x ICE-ULT3 single board computer	
1 x Heatsink	1 x QIG

Ordering Information

Part No.	Description
ICE-ULT3-i7-R10	COM Express Compact size Type 6 Module, 6th Generation Intel® Core™ i7-6600U (15W) on-board Processor (ULT), DDR4, VGA, LVDS, DDI, GbE, USB 3.2 Gen 1 (5Gb/s), SATA 6Gb/s and HD Audio, RoHS
ICE-ULT3-i3-R10	COM Express Compact size Type 6 Module, 6th Generation Intel® Core™ i3-6100U (15W) on-board Processor (ULT), DDR4, VGA, LVDS, DDI, GbE, USB 3.2 Gen 1 (5Gb/s), SATA 6Gb/s and HD Audio, RoHS
ICE-ULT3-C-R10	COM Express Compact size Type 6 Module, Intel® Celeron® 3955U (15W) on-board Processor (ULT), DDR4, VGA, LVDS, DDI, GbE, USB 3.2 Gen 1 (5Gb/s), SATA 6Gb/s and HD Audio, RoHS
ICE-DB-T6R-R11	Base Board for COM Express Type 6 Module COM.0 Rev. 2.1, support PICMG EAPI R1.0

TYPE 6

ICE-BT-T6

COM Express Rev 2.1 Basic Type 6 Module, Intel® 4th Generation Atom™ Processor, VGA, DDI, GbE, SATA 3Gb/s, USB and Audio, RoHS

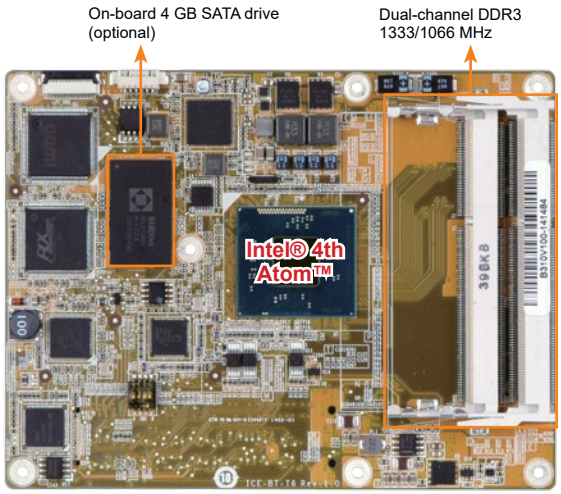

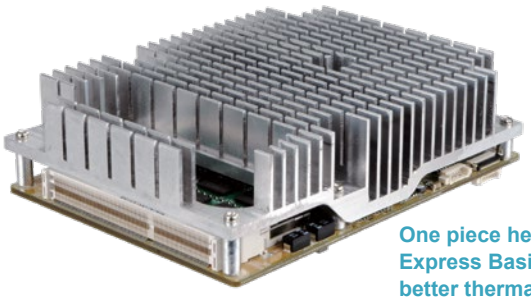

One piece heat sink for COM Express Basic Size provides better thermal solution

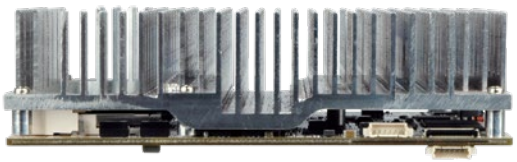



Specifications

- CPU
  Intel® Atom™ E3845 on-board SoC (1.91GHz, quad-core, 2MB cache, TDP=10W)
  Intel® Atom™ E3827 on-board SoC (1.75GHz, dual-core, 1MB cache, TDP=8W)
  Intel® Atom™ E3826 on-board SoC (1.46GHz, dual-core, 1MB cache, TDP=7W)
  Intel® Atom™ E3825 on-board SoC (1.33GHz, dual-core, 1MB cache, TDP=6W)
  Intel® Atom™ E3815 on-board SoC (1.46GHz, single-core, 512KB cache, TDP=5W)
  Intel® Celeron® J1900 on-board SoC (2GHz, quad-core, 2MB cache, TDP=10W)
- Memory
  Two 204-pin 1066/1333 MHz dual-channel DDR3L SDRAM unbuffered DIMMs support up to 8 GB
- BIOS
  UEFI BIOS
- Graphics Engine
  Intel® HD Graphics Gen 7 Engine with 4 execution units, supporting DX11.1, OpenGL 4.2 and OpenCL1.2
- Display Output
  1 x VGA (up to 2560x1600@60Hz)
  1 x DDI 1 (DP up to 2560x1600@60Hz / HDMI up to 1920x1080@60Hz)
  1 x LVDS: 18/24-bit dual-channel LVDS (up to 1920x1200@60Hz)
- Ethernet
  Intel® I210 GbE Ethernet
- Storage
  2 x SATA 3Gb/s signal to baseboard
  Optional soldered down SSD up to 64 GB (SATA port 1)
- Embedded Controller
  ITE IT8528E/FX
- USB
  7 x USB 2.0 signal to baseboard
  4 x USB 3.2 Gen 1 (5Gb/s) signal to baseboard (via 1 to 4 USB 3.2 Gen 1 (5Gb/s) hub)
- Audio
  High Definition Audio interface to baseboard
- GPIO
  Yes, to baseboard
- SMBus
  Yes, to baseboard
- I²C
  Yes, to baseboard
- LPC
  Yes, to baseboard
- SPI
  Yes, to baseboard
- Internal Storage
  2-Kb serial I²C bus EEPROM supports EAPI Rev. 1.0
- Serial Port
  2 x Serial ports to baseboard (TX & RX from EC)
- Expansion
  5 x PCIe x1 signal to baseboard (2 from SoC, 3 from PLX PEX8605 switch IC)
- Watchdog Timer
  Software programmable, supports 1~255 sec. system reset (by EC)
- Power Consumption
  +12V@0.54A, Vcore_12V@0.95A
  (Intel® Celeron® J1900 CPU with two 8 GB 1333 MHz DDR3 memory)
- Operating Temperature
  -20°C ~ 60°C
- Storage Temperature
  -30°C ~ 70°C
- Operating Humidity
  5% ~ 95%, non-condensing
- Dimensions
  125 mm x 95 mm
- Weight
  GW: 600g / NW: 200g
- CE/FCC compliant

Features

- Intel® 22nm Atom™ or Celeron® on-board SoC supported
- Intel® HD Graphics Gen7 integrates high-performance graphics and media processing
- Supports 1333/1066 MHz DDR3L (1.35V) memory, up to 8 GB
- Supports one analog CRT, one 24-bit dual-channel LVDS, and one DDI
- Optional soldered down 4 GB SSD

Dimensions *(Unit: mm)*

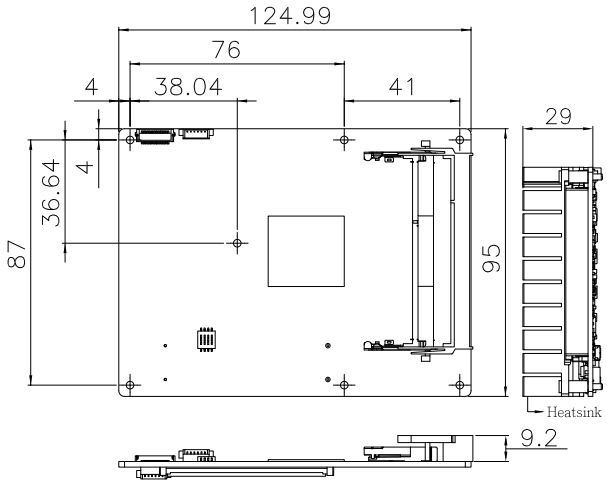

Packing List

1 x ICE-BT-T6 single board computer	
1 x Heatsink	1 x QIG

Ordering Information

Part No.	Description
ICE-BT-T6-J19001-R10	COM Express Basic Type 6 module with Intel® Celeron® quad-core processor J1900 (10W), VGA, DDI, LVDS, GbE, SATA, USB 3.2 Gen 1 (5Gb/s) and HD Audio, RoHS
ICE-BT-T6-E38XX1-R10	COM Express Basic Type 6 module with Intel® Atom™ processor E38XX, VGA, DDI, LVDS, USB 3.2 Gen 1 (5Gb/s), GbE, SATA and HD Audio, RoHS (by request MOQ: 100pcs/lot)
ICE-DB-T6R-R11	Baseboard for COM Express Type 6 Module COM.0 Rev. 2.1, supports PICMG EAPI R1.0
19100-000186-00-RS	Heat spreader for ICE-BT-T6

TYPE10

ICE-DB-T10

Baseboard for COM Express Type 10 Module COM.0 Rev. 2.1, support PICMG EAPI R1.0

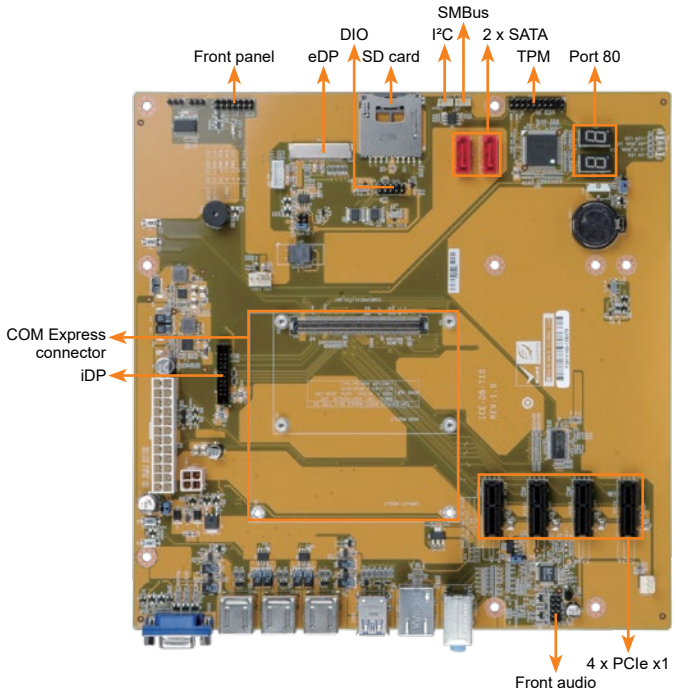

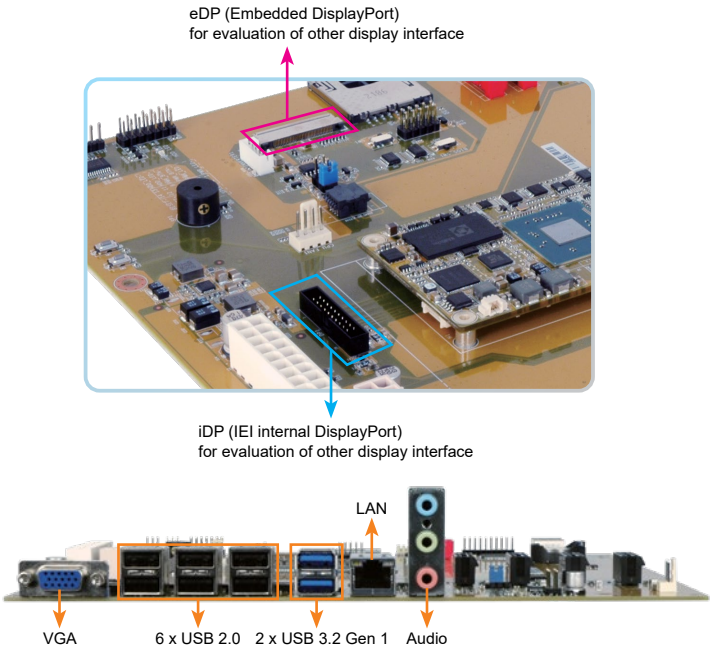

Specifications

- Form Factor
  microATX form factor baseboard (244mm x 244mm)
- COM Express type
  Supports COM Express Compact/Mini module using connector pin out Type 10
- Display Interfaces
  1 x eDP
  1 x VGA
  1 x DisplayPort pin-header
- Audio
  Realtek ALC888S HD Audio codec (Line-in, Line-out, Mic)
- Internal I/O Interface
  4 x PCIe x1 — 1 x LPC
  2 x SATA port — 1 x SD card socket
  2 x RS-232 from COM Express (only TX, RX, GND)
- External I/O Interface
  1 x VGA — 1 x Audio jack (Line-in, Line-out, Mic)
  2 x USB 3.2 Gen 1 (5Gb/s) — 6 x USB 2.0
  1 x RJ-45
- Front Audio
  1 x Front audio (2x5 pin)
- TPM
  1 x TPM connector (2x10 pin)
- 80 Port
  1 x 80 port (2x7 segment display)
- Front Panel
  1 x Front panel (2x7 pin, power LED, HDD LED, speaker(Buzzer), power button, reset button)
- I²C
  1 x I²C (1x4 pin)
- SMBus
  1 x SMBus (1x4 pin)
- Internal Storage
  EEPROM (support EAPI R1.0)
- LPC
  1 x LPC
- Fan Connector
  1 x 4-pin / 1 x 3 pin CPU module fan connector
- Watchdog Timer
  Software programmable, support 1~255 sec. system reset
- Power Supply
  ATX / AT power supply
  24+4 pin
- Operating Temperature
  -20°C ~ 60°C
- Storage Temperature
  -30°C ~ 70°C
- Operating Humidity
  5% ~ 95%, non-condensing
- Dimensions
  243.8 mm x 243.8 mm (9.6" x 9.6")
- Weight: GW:550g / NW:350g
- CE/FCC compliant



Features

- mATX form factor baseboard for COM.0 Rev. 2.1, Pin-out Type 10
- Support four PCIe x1
- Support eDP, VGA and iDP
- Support PICMG EAPI R1.0

Dimensions (Unit: mm)

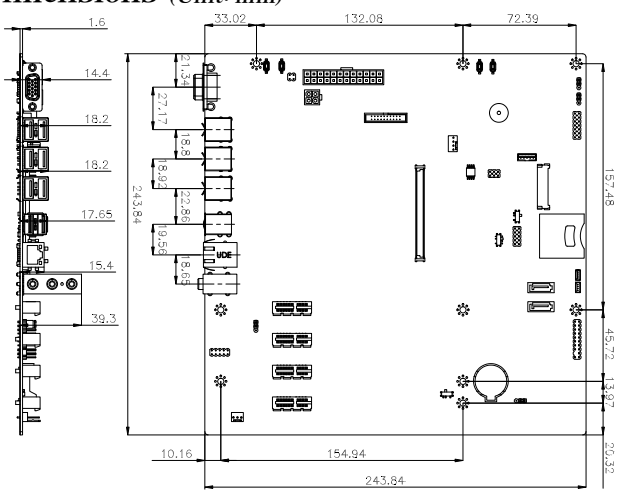

Packing List

1 x COM Express Baseboard	1 x SATA cable
1 x Mini jumper pack	1 x QIG

Ordering Information

Part No.	Description
ICE-DB-T10-R10	Baseboard for COM Express Type 10 Module COM.0 Rev. 2.1, support PICMG EAPI R1.0
19800-000082-RS	RS-232/422/485 cable, 14-pin to dual DB-9, 230mm, P=2.54
32102-000100-200-RS	SATA power cable, MOLEX 5264-4P to SATA15P

TYPE 7

ICE-DB-T7-i2

Base Board for COM Express Type 7 Module COM.0 Rev. 3.0

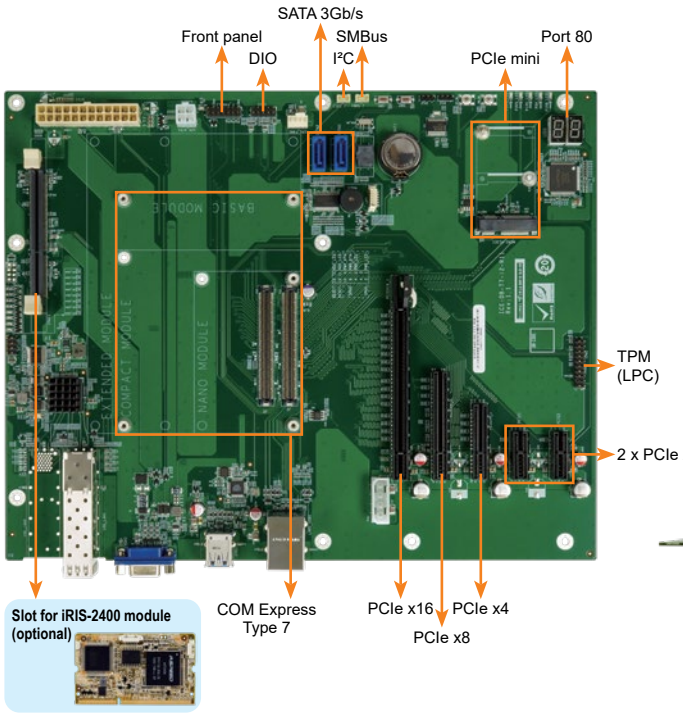

New

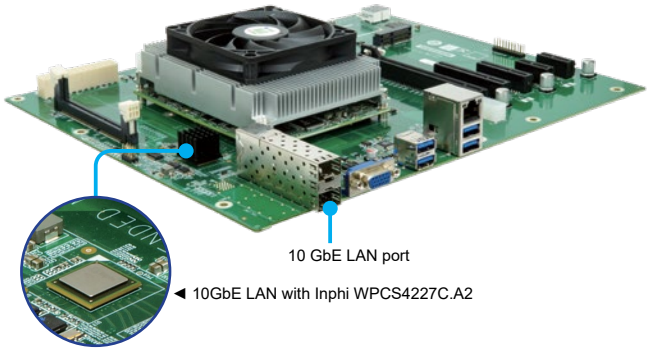

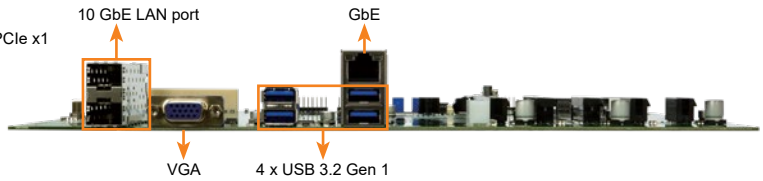

IPMI 2.0 Compliant | Native PCIe Gen.3 | USB 3.2 | SATA 6Gb/s | TPM 1.2 Support

Specifications

- Form Factor
  ATX form factor base board
- CPU
  Supports COM Express Compact / Basic module using connector pin out Type 7
- Display Interfaces
  1 x VGA from iRIS-2400
- Expansion
  1 x PCIe x4 (x4 Gen 2 signal)
  1 x PCIe x16 (x16 Gen 3 signal)
  1 x PCIe x8 (x8 Gen 3 signal)
  1 x PCIe x4 (x1 Gen 2) (x4 signal option)
  2 x PCIe x1 (x1 Gen 2)
- Internal I/O Interface
  1 x Mini-PCIe
  2 x SATA port
  2 x RS-232 from COM Express (only TX, RX, GND)
  2 x RS-232 from SIO
- Rear I/O Interface
  4 x USB 3.2 Gen 1
  1 x RJ45 connector
  1 x VGA (Display output depends on CPU sku)
- TPM
  2 x 10-pin pin header support LPC interface
- 80 port
  2x7 segment display
- Front Panel
  1 x Front_Panel (Power LED, HDD LED, Speaker(Buzzer), Power Button, Reset Button)
- iRIS Remote Management Module
  1 x iRIS-2400 slot
- I²C
  1 x I²C (1 x 4-pin wafer)
- SMBus
  1 x SMBus (1 x 4 pin wafer)
- Internal storage
  EEPROM (support EAPI R1.0)
- Watchdog Timer
  Software Programmable support 1~255 sec system reset
- GPIO
  8-bit GPIO
- Power Supply
  ATX / AT Power Supply
  24+4 pin
- Fan Connector
  1 x 4-pin / 1x 3 pin CPU module fan connector
  1 x 3-pin system fan connector by SIO
- Temperature
  -40°C ~ 85°C
- Humidity
  5% ~ 95%, non-condensing
- Dimensions
  304.8 mm x 243.8 mm (12" x 9.6")
- CE/FCC compliant

Features

- ATX form factor base board for COM.0 Rev. 3.0 Pin-out Type 7
- Support 2 x 10GbE PHY (WPCS4227C.A2)
- Support 32 PCIe lanes
- Support PICMG EAPI R1.0
- Support IPMI 2.0 via iRIS-2400 module

Dimensions *(Unit: mm)*

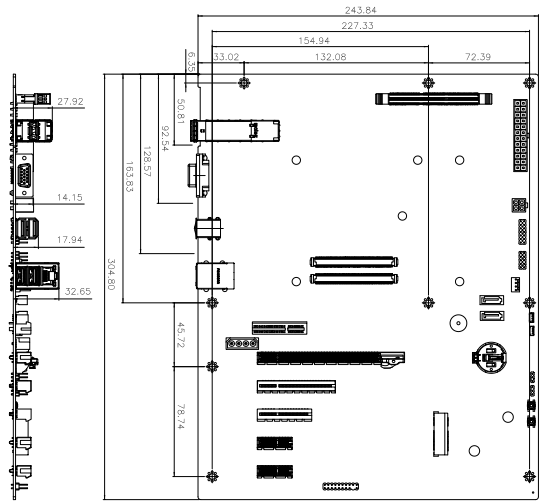

Packing List

1 x COM Express Baseboard	1 x Mini jumper pack
1 x Dual ports RS-232 cable (P/N: 19800-000051-RS)	1 x QIG
2 x SATA cable (P/N: 32000-062800-RS)	

Ordering Information

Part No.	Description
ICE-DB-T7-i2-R11	Base Board for COM Express Type 7 Module COM.0 Rev. 3.0, support PICMG EAPI R1.0, iRIS-2400
iRIS-2400-R10	IPMI 2.0 adapter card with AST2400 BMC chip for DDR3 SO-DIMM socket interface

TYPE 6

ICE-DB-T6R

Baseboard for COM Express Type 6 Module COM.0 Rev. 2.1 (for ICE-ULT3, ICE-QM871 & ICE-BT-T6)

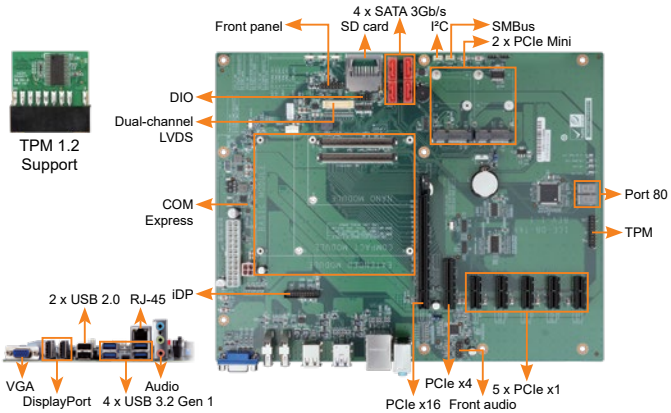

Features

- ATX form factor baseboard for COM.0 Rev. 2.1, pin-out Type 6
- Support one PCIe x16, one PCIe x4, five PCIe x1, two PCIe Mini
- Support PICMG EAPI R1.0

Specifications

- Form Factor
  ATX form factor baseboard
- CPU
  Supports COM Express Compact/Mini module using connector pin out Type 6
- Display Interfaces
  1 x DisplayPort connectors
  1 x LVDS 18/24-bit single or dual-channel (with PWM back light controller)
  1 x VGA
  2 x DisplayPort pin-header
- Audio
  Realtek ALC888S HD Audio codec (Line-in, Line-out, Mic)
- Expansion
  1 x LPC 1 x PCIe x4
  1 x PCIe x16 5 x PCIe x1
  2 x PCIe Mini (MINIPCIE1 with mSATA support, colay with SATA_4)
- Internal I/O Interface
  1 x PS2 KB/MS 4 x SATA port
  1 x SD card socket
- External I/OInterface
  1 x Audio jack (Line-in, Line-out, Mic)
  1 x DisplayPort connectors
  1 x HDMI 1 x VGA
  1 x PS2 KB/MS 2 x USB 2.0
  1 x RJ-45
  4 x USB 3.2 Gen 1 (5Gb/s)
- Front Audio: 2x5 pin pin header
- TPM: 1 x TPM (2x10 pin)
- 80 port: 2x7 segment display
- Front Panel
  1 x Front panel (2x7 pin, power LED, HDD LED, speaker/buzzer, power button, reset button)
- I²C: 1 x 4-pin wafer
- SMBus: 1 x 4-pin wafer
- Internal storage
  EEPROM (supports EAPI R1.0)
- Watchdog Timer
  Software programmable supports 1~255 sec system reset
- GPIO: 8-bit GPIO
- Power Supply
  ATX / AT Power Supply
  24+4 pins
- Fan Connector
  1 x 4-pin / 1 x 3-pin CPU module fan connector
  1 x 3-pin system fan connector by SIO
- Operating Temperature: -20°C ~ 60°C
- Storage Temperature: -30°C ~ 70°C
- Operating Humidity
  5% ~ 95 non-condensing
- Dimensions
  304.8 mm x 243.8 mm (12" x 9.6")
- Weight: GW:650g / NW:430g
- CE/FCC compliant

Dimensions *(Unit: mm)*

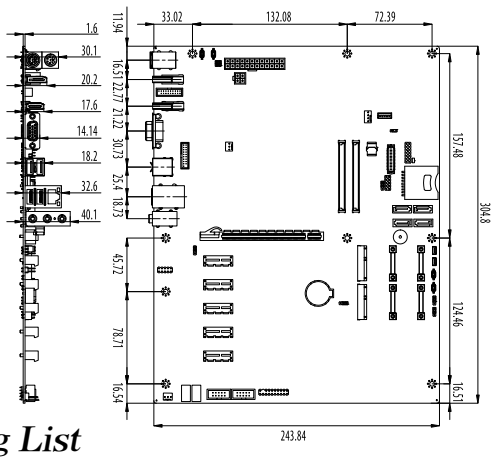

Packing List

1 x COM Express baseboard	1 x Mini jumper pack
2 x SATA cable	1 x QIG

Ordering Information

Part No.	Description
ICE-DB-T6R-R11	Baseboard for COM Express Type 6 Module COM.0 Rev. 2.1, support PICMG EAPI R1.0
32102-000100-200-RS	SATA power cable, MOLEX 5264-4P to SATA15P

TYPE 6

ICE-DB-T6

Baseboard for COM Express Type 6 Module (for ICE-QM770 & ICE-CV-D25501/N26001)

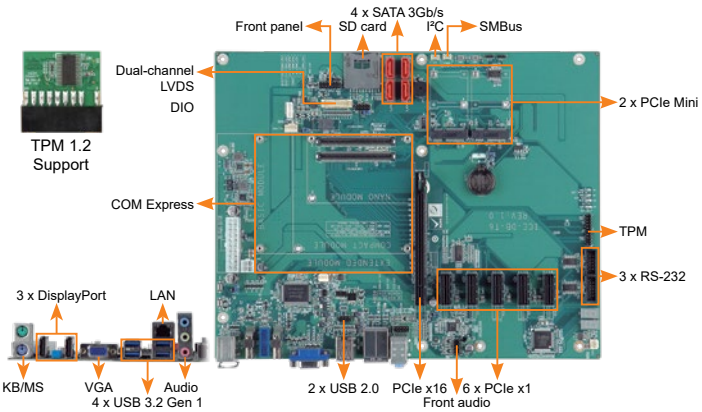

Features

- ATX form factor baseboard for COM Express Rev. 2, Pin-out Type 6
- Supports one PCIe x16, six PCIe x1 and two PCIe Mini
- Supports smart battery charger

Specifications

- Form Factor: ATX form factor baseboard
- CPU
  Supports COM Express Compact/Mini module using connector pin out Type 6
- Display Interfaces
  1 x 18/24-bit single/dual-channel LVDS
  1 x VGA
  3 x DisplayPort (2 x real connectors, 1 x pin header)
- Super I/O: W83627DHG
- Audio
  Realtek ALC892 (Colay ALC888) HD Audio codec (Line-in, Line-out, Mic)
- Expansion
  1 x LPC 2 x PCIe Mini (with USB)
  1 x PCIe x16 6 x PCIe x1
- Internal I/O Interface
  1 x PS2 KB/MS 2 x RS-232 from SIO
  1 x SD 2 x USB 2.0
  4 x SATA port
  2 x RS-232 from COM Express (only TX, RX and GND)
- External I/O Interface
  1 x VGA 4 x USB 3.2 Gen 1 (5Gb/s)
  1 x RJ-45 3 x DisplayPort
  1 x Audio jack (Line-in, Line-out, Mic)
- Front Audio: 1 x Front audio (2x5 pin)
- TPM: 1 x TPM (2x10 pin)
- 80 port: 2x7 segment display
- Front Panel
  1 x Front panel (2x7 pin, power LED, HDD LED, speaker/buzzer, power button, reset button)
- I²C: 1 x 4-pin wafer
- SMBus: 1 x 4-pin wafer
- Watchdog Timer
  Software programmable supports1~255 sec. system reset
- GPIO: 8-bit GPIO (GPIO from iWDD co-lay SDIO)
- Power Supply: ATX/AT power supply
- Battery: Supports smart battery charger connector
- Fan Connector
  1 x 4-pin / 1 x 3-pin CPU module fan connector
  1 x 3-pin system fan connector by SIO
- Operating Temperature: -10°C ~ 60°C
- Storage Temperature: -20°C ~ 70°C
- Operating Humidity
  5% ~ 95%, non-condensing
- Dimensions
  304.8 mm x 243.8 mm (12" x 9.6")
- Weight: GW:660g / NW:450g
- CE/FCC compliant

Dimensions *(Unit: mm)*

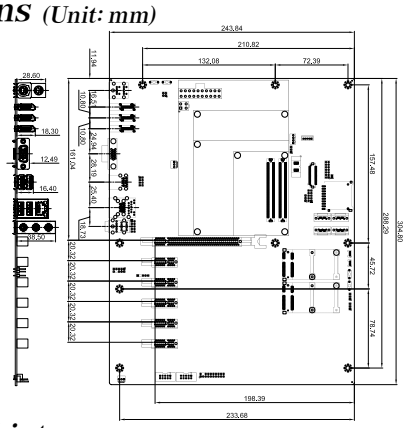

Packing List

1 x COM Express baseboard	
1 x Dual-port RS-232 cable	1 x Mini jumper pack
2 x SATA cable	1 x QIG

Ordering Information

Part No.	Description
ICE-DB-T6-R10	Baseboard for COM Express Type 6 modules
19800-000082-RS	RS-232/422/485 cable, 14-pin to dual DB-9, 230mm, P=2.54
32102-000100-200-RS	SATA power cable, MOLEX 5264-4P to SATA15P

Q7 Introduction

- The Qseven™ concept is an off-the-shelf, multi vendor, Single Board Computer that integrates all the core components of a common PC and is mounted onto an application specific carrier board.
- Qseven™ modules have a standardized form factor of 70mm x 70mm and have specified pinouts based on the high speed MXM system connector that has a standardized pinout regardless of the vendor.
- The Qseven™ module provides the functional requirements for an embedded application. These functions include, but are not limited to, graphics, sound, mass storage, network and multiple USB ports. A singleruggedized MXM connector provides the carrier board interface to carry all the I/O signals to and from the Qseven™ module.

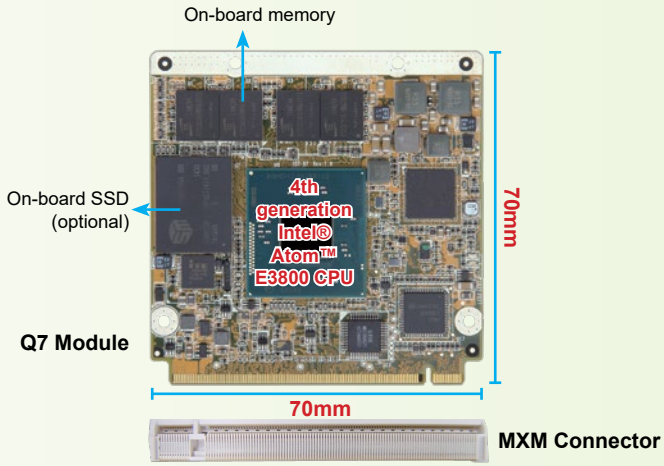

The New Module Standard

Compact, Square & Cost Efficient
Module Concept for Ultra Mobile Applications

- Low Cost
- Low Power Consumption
- Legacy Free
- Fast Serial Interfaces

ETX, COM Express and Q7 Comparison Table			
Platform	**ETX 3.0**	**COM Express Type II Basic Module**	**Q7**
Size	95 x 114 mm	95 x 125 mm	70 x 70 mm
Connector	4 x 100-pin	2 x 220-pin	1 x 230-pin
Memory	1 x SO-DIMM	1 x SO-DIMM	on board memory
VGA	Yes	Yes	N/A
LCD	TTL or LVDS	Up to two single LVDS or Dual-channel LVDS	SDVO/HDMI/DP (Shared)
Expansion	PCI & ISA	PCI & PCI Express	PCI Express
Ethernet	10/100 Mbps	10/100/1000 Mbps	10/100/1000Mbps
USB	4	8	8
SATA	2 (ETX 3.0 only)	Up to 4 SATA	Up to 2 SATA
IDE	2CH	1CH	N/A
Audio	Mic-In/Line-in/Line-Out	AC97/HD interface	HD interface
Power	5V	12V	5V

Defined Interfaces

- 4 x PCI Express x1 Lanes
- 2 x SATA
- 8 x USB 2.0
- 1 x 1000BaseT Ethernet
- 1 x SDIO 8 bit
- 2 x 24-bit LVDS
- SDVO / HDMI / DisplayPort (shared)
- HDA (High Definition Audio)
- I²C Bus
- LPC (Low Pin Count Bus)
- CAN Bus
- Fan Control
- Power Management Signals
- Battery Management
- 5V Power (TDP 12 Watt)
- Unique API for I²C Bus, Watchdog Timer and EPI (Embedded Panel Interface)
- Thermal Cooling Interface defined

Typical Applications


Automation Controllers


Mobile Devices


Measurement Systems

iQ7-BT

Qseven Rev. 2.0 Module Supports 4th generation Intel® Atom™ Processor, LVDS, DDI, GbE, SATA 3Gb/s, USB 3.2 Gen 1 (5Gb/s), SDIO, Audio, -20°C~60°C and RoHS

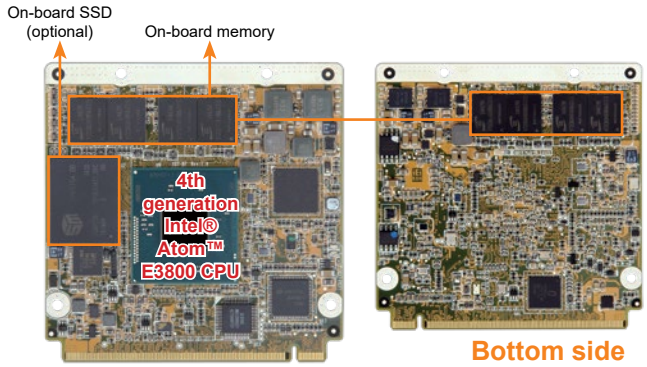

Memory Down | Dual Display | USB 3.2

Features

- 22nm Intel® Atom™ on-board SoC supported
- Qseven connector pinout according to Qseven Specification Revision 2.0
- Supports 2 GB 1066/1333 MHz DDR3L memory (4 GB optional)
- Optional soldered-down 2 GB~64 GB SSD

Specifications

- CPU
  Intel® Atom™ E3845 on-board SoC (1.91GHz, quad-core, 2MB cache, TDP=10W)
  Intel® Atom™ E3825 on-board SoC (1.33GHz, dual-core, 1MB cache, TDP=6W)
- Memory
  2 GB soldered-down 1066/1333 MHz DDR3L memory (up to 4 GB)
- BIOS
  UEFI BIOS
- Graphics Engine
  Intel® HD Graphics Gen 7 Engine with 4 execution units support DX11.1, OpenGL 4.2 and OpenCL1.2
- Display Output
  Dual independent display
  1 x 18/24-bit dual-channel LVDS (up to 1920x1200@60Hz)
  1 x DDI (DP up to 2560x1600@60Hz / HDMI up to 1920x1080@60Hz)
- Ethernet
  Intel® I210 GbE controller
- Embedded Controller
  ITE IT8528E/FX
- I/O Interface
  6 x USB 2.0 signal to baseboard
  1 x USB 3.2 Gen 1 (5Gb/s) signal to baseboard
- Storage
  2 x SATA 3Gb/s signal to baseboard
  Optional soldered-down 4 GB SSD (SATA port 2)
- Audio
  High-definition Audio interface to baseboard
- SMBus
  Yes, to baseboard
- I²C
  Yes, to baseboard
- LPC
  Yes, to baseboard
- SDIO
  One 8-bit SDIO 2.0, to baseboard
- SPI
  Yes, to baseboard
- Serial Port
  One serial port to baseboard (form EC)
- Expansion
  3 x PCIe x1 signal to baseboard
- Watchdog Timer
  Software programmable supports 1~255 sec. system reset (form EC)
- Power Consumption
  3.3V@0.13A, 5V@0.13A, 12V@1.35A, 5VSB@0.12A
  (Intel® Atom™ E3845 CPU with 2 GB on-board memory)
- Operating Temperature
  -20°C ~ 60°C
- Operating Humidity
  5% ~ 95%, non-condensing
- Dimensions
  70 mm x 70 mm
- Weight
  GW: 300g / NW: 150g
- CE/FCC compliant

Packing List

1 x iQ7-BT single board computer	
1 x Heatsink	1 x QIG

Ordering Information

Part No.	Description
iQ7-BT-E38451-R10	Qseven Rev. 2.0 module supports Intel® Atom™ processor E3845 (quad core, 10W), on-board 2 GB DDR3L, LVDS, DDI, GbE, SATA 3Gb/s, SDIO, USB 3.2 Gen 1 (5Gb/s), Audio, and RoHS
iQ7-BT-E38251-R10	Qseven Rev. 2.0 module supports Intel® Atom™ processor E3825 (dual core, 6W), on-board 2 GB DDR3L, LVDS, DDI, GbE, SATA 3Gb/s, SDIO, USB 3.2 Gen 1 (5Gb/s), Audio, and RoHS
iQ7-DB-MATX-R10	Baseboard for Qseven Rev. 2.0 module

Note: Models with other CPUs not listed in the table are requested by MOQ - 100 pcs/lot.

iQ7-DB-MATX

Baseboard for Qseven Rev. 2.0 Module

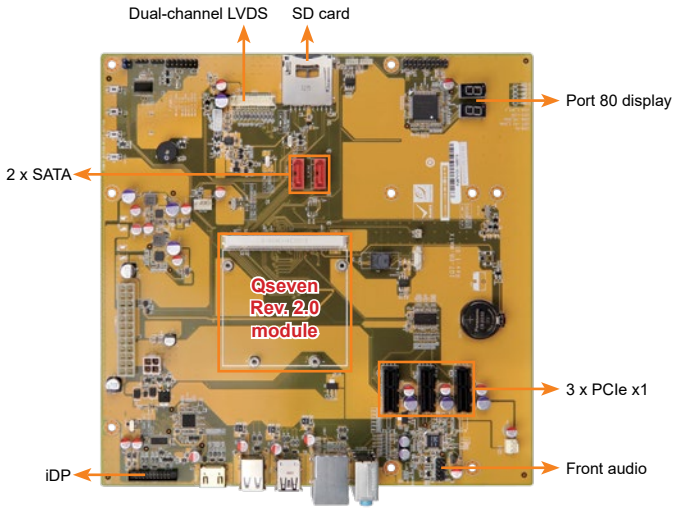

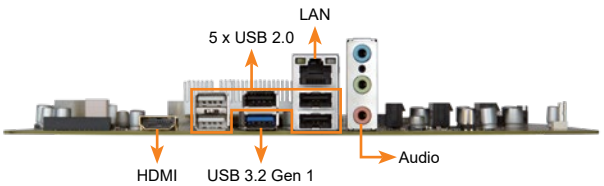

Features

- mATX form factor baseboard for Qseven Rev. 2.0 module
- Supports three PCIe x1
- 18/24-bit dual-channel LVDS

Specifications

- COM Express Type
  mATX form factor baseboard for Qseven Rev. 2.0 module
- Display Interfaces
  1 x LVDS
  1 x HDMI
  1 x iDP
- Audio
  Realtek ALC888S HD Audio codec (Line-in, Line-out, Mic)
- Internal I/O Interface
  1 x LPC
  1 x SD card socket
  2 x SATA port
  3 x PCIe x1
- External I/O Interface
  1 x Audio jack (Line-in, Line-out, Mic)
  1 x HDMI
  1 x USB 3.2 Gen 1 (5Gb/s)
  5 x USB 2.0
  1 x RJ-45
- Front Audio
  1 x Front audio (2x5 pin)
- TPM
  1 x TPM (2x10 pin)
- Port 80 Display
  2x7 segment display
- Front Panel
  1 x Front panel (2x7 pin, power LED, HDD LED, buzzer speaker, power button, reset button)
- I²C
  3 x I²C (1x4 pin)
- SMBus
  1 x SMBus (1x4 pin)
- Watchdog Timer
  Software programmable, supports 1~255 sec. system reset
- Power Supply
  ATX power supply, ATX/AT mode support
- Fan Connector
  1 x CPU smart fan (1x4 pin)
  1 x System fan (1x3 pin)
- Temperature
  -40°C ~ 85°C
- Humidity
  5% ~ 95%, non-condensing
- Dimensions
  243.8 mm x 243.8 mm
- CE/FCC compliant

Packing List

1 x Qseven® baseboard
1 x QIG

Ordering Information

Part No.	Description
iQ7-DB-MATX-R10	Baseboard for Qseven Rev. 2.0 module
32102-000100-200-RS	SATA power cable, MOLEX 5264-4P to SATA15P

GPOE-2P

PCI Express Power over Ethernet card, 2-port 1000 Base(T), 802.3at compliant, low profile, RoHS

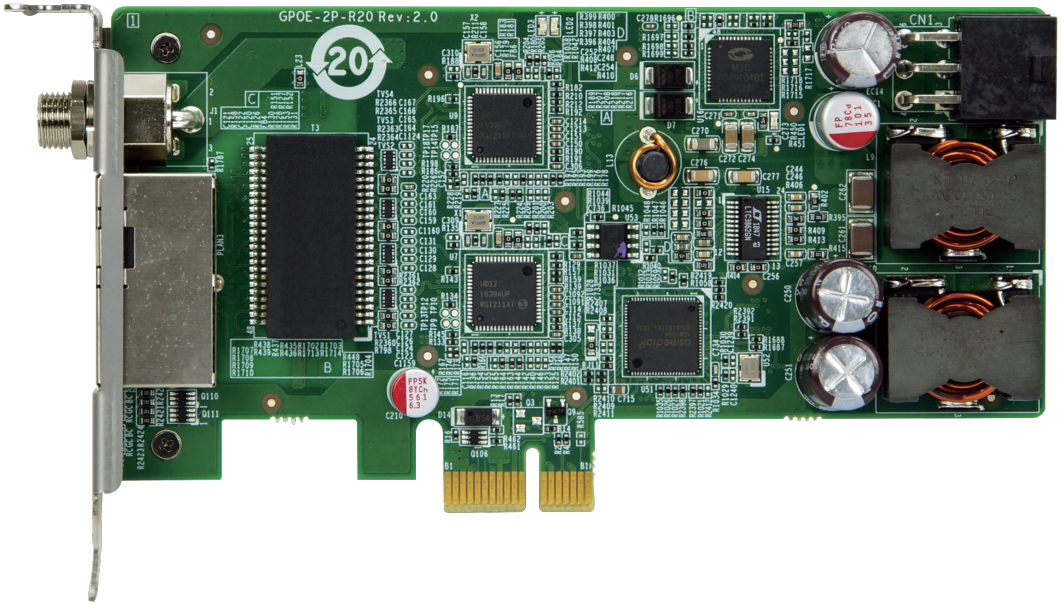

Specifications

- Interface
  PCI Express® x1
- Ethernet
  Intel® I211AT controller
  9kB jumbo frame
  IEEE 802.3az, IEEE1588
- Power Input
  12~24V DC input
  1 x Internal DC input (1x4 pin)
  1 x External DC Jack (Φ2.1/Φ5.5)
  ***Caution! Choose one input only at a time*
- PoE Capability
  IEEE 802.3at
  30W / 52V DC per port
  (Support for total 60 watts under full load)
- Operating Temperature
  0°C ~ 60°C
- Storage Temperature
  -10°C ~ 70°C
- Operating Humidity
  5% ~ 95%, non-condensing
- Dimensions
  130 mm x 65 mm
- Weight
  110g
- CE/FCC compliant

Features

- PCI Express® x1 compliant
- Support IEEE 802.3at for PoE (Power over Ethernet) with 30 watts per port
- Support link aggregation/jumbo frames (9 Kbyte)
- Supports 12V~24V DC input power

Packing List

1 x GPOE-2P card
1 x Full height bracket
1 x QIG

Dimensions

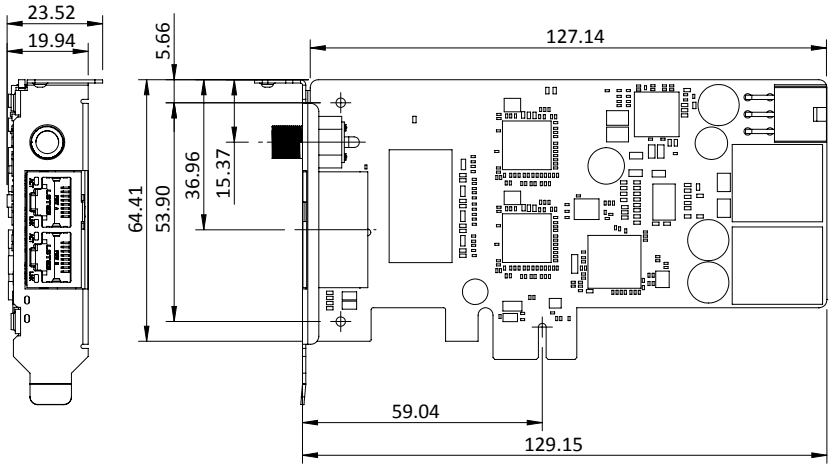

(Unit: mm)

Ordering Information

Part No.	Description
GPOE-2P-R20	PCI Express Power over Ethernet card, 2-port 1000 Base(T), 802.3at compliant, low profile, RoHS
32102-044900-100-RS	WIRE cable, power cable, PCIe power cable, 3, 100MM, 0AWG, (A) MOLEX 8981-04M P=5.08*2, (B) TKP:H6657R1-06-B-03 P=4.2, Polywell, RoHS
63040-010090-120-RS	Power adapter, FSP, FSP090-DIEBN2, 9NA0904712, Vin:90~264VAC, 90W, Plug=7.5mm, Cable=1500mm, Erp (no load 0.5W), Vout:19VDC, Φ2.1/Φ5.5/lock, CCL, RoHS
63040-010065-200-RS	Power adapter, FSP, FSP065-REBN2, 9NA0654709, Vin:90~264VAC, 65W, Dim:46.3x108.3x30mm, Plug=7.5mm, Cable=1500mm, Erp (no load 0.1W), Vout:19VDC, Φ2.1/Φ5.5/lock, CCL, RoHS

GPOE-4P

PCI Express Power over Ethernet card, 4-port 1000 Base(T), 802.3at/af compliant, low profile, RoHS

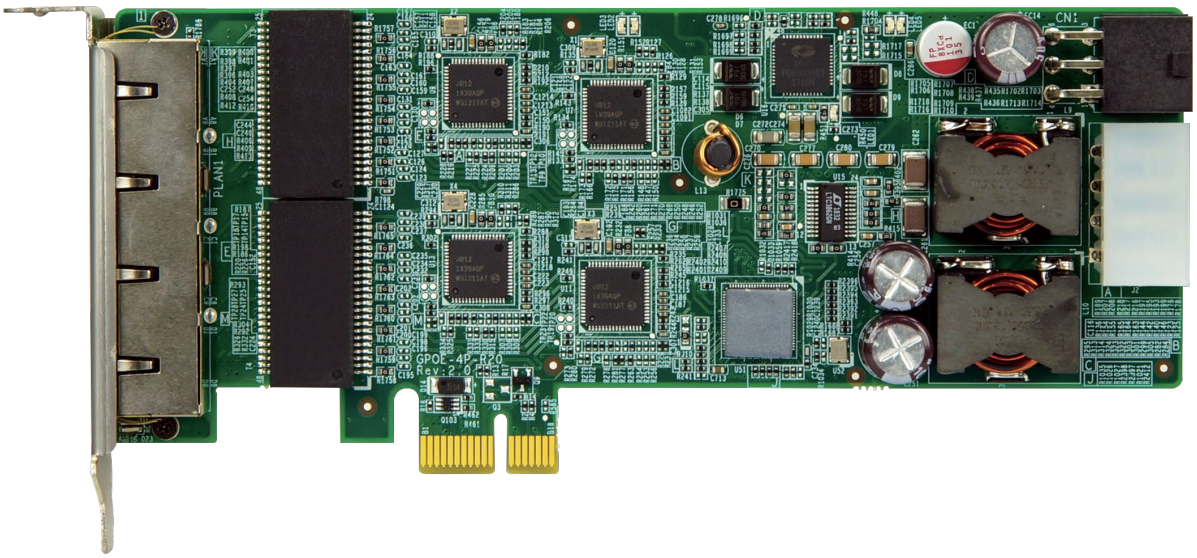

Specifications

- Interface
  PCI Express® x1
- Ethernet
  Intel® I211-AT controller
  9kB jumbo frame
  IEEE 802.3az, IEEE1588
- Power Input
  12~24V DC input
  1 x Internal DC input (1x4 pin)
  1 x Internal DC input (2x3 pin)
  ***Caution! Choose one input only at a time*
- PoE Capability
  Standard mode: IEEE 802.3af with 15.4W / 52V per port
  Dual port mode: IEEE 802.3at with 30W / 52V per port
  (Support for total 90 watts under full load)
- Operating Temperature
  0°C ~ 60°C
- Storage Temperature
  -10°C ~ 70°C
- Operating Humidity
  5% ~ 95%, non-condensing
- Dimensions
  160 mm x 65 mm
- Weight
  110g
- CE/FCC compliant

Features

- PCI Express® x1 compliant
- Support for total 90 watts under full load
- Support link aggregation/jumbo frames (9 Kbyte)
- Supports 12V~24V DC input power

Packing List

1 x GPOE-4P card
1 x Full height bracket
1 x QIG

Dimensions

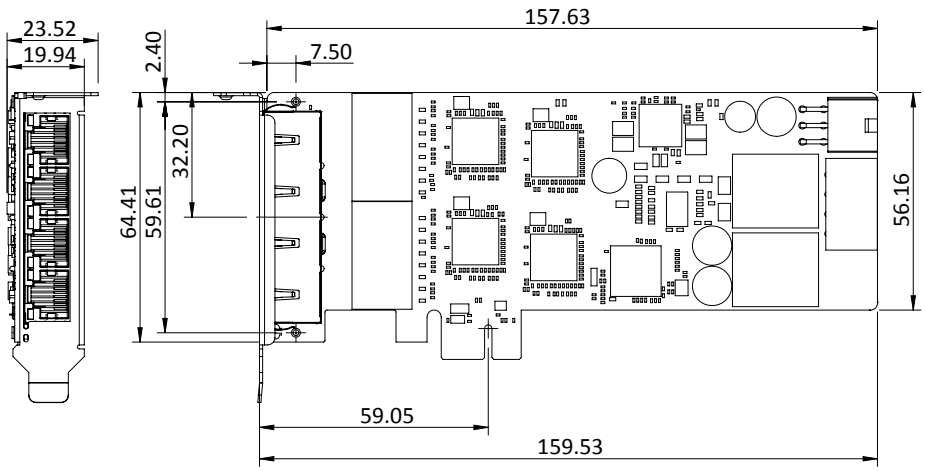

(Unit: mm)

Ordering Information

Part No.	Description
GPOE-4P-R20	PCI Express Power over Ethernet card, 4-port 1000 Base(T), 802.3af compliant, low profile, RoHS
32102-011500-100-RS	WIRE cable, power cable, 3, 150MM, 18AWG, MOLEX 8981-04P P=5.08 X2, MOLEX 8981-04M P=5.08, Wins Precision, RoHS
32102-044900-100-RS	WIRE cable, power cable, PCIe power cable, 3, 100MM, 0AWG, (A) MOLEX 8981-04M P=5.08*2, (B) TKP:H6657R1-06-B-03 P=4.2, Polywell, RoHS
32102-045800-100-RS	WIRE cable, power cable, 2, 300MM, 20AWG, (A) DC JACK 5.5*2.1+NUT+WASHER (Smcts:655-353), (B) TKP: H6657R1-06-B-03 P=4.2, Polywell, RoHS

GPOE-6P

PCI Express Power over Ethernet card, 6-port 1000 Base(T), 802.3at / bt compliant, RoHS

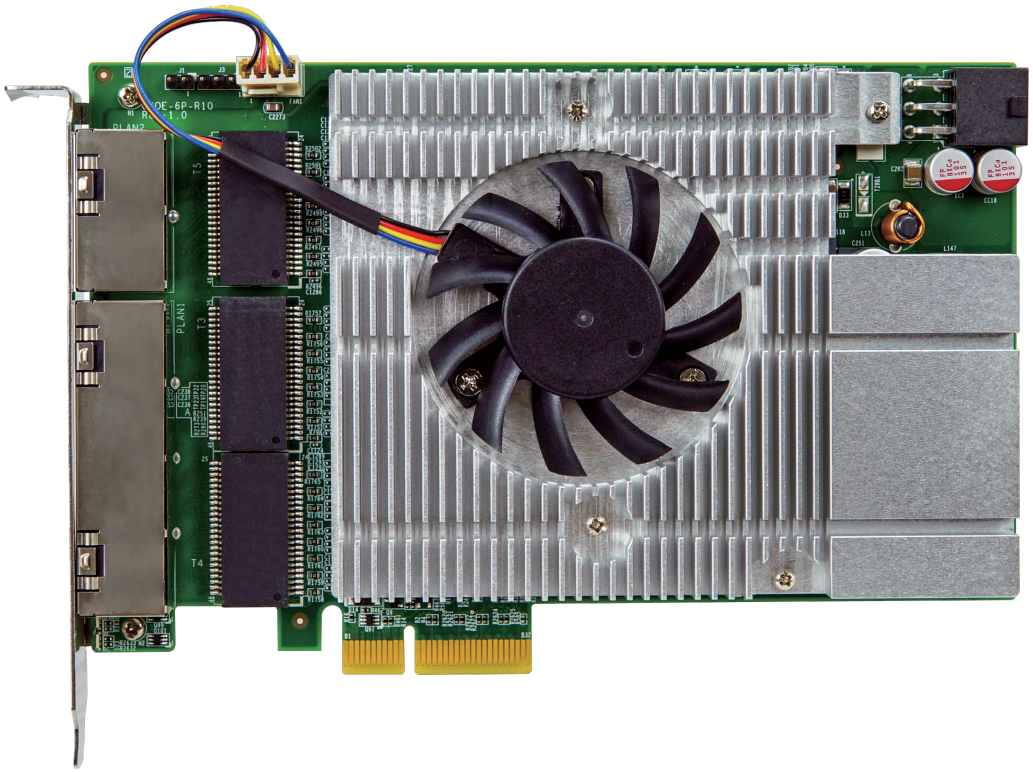

Features

- Provide 6 x10/100/1000Base-T(X) PoE (P.S.E.) ports
- Total 180 Watts power budget with maximum 90 Watts per port
- PoE power sourced from 12~24VDC of ATX power
- Each LAN port supports both PoE and Non-PoE connections (Auto Detect & Classification)
- Supports SW/RDK (IEI GPOE Management Software Tools)
- Compatible with x4, x8 and x16 PCIe slots
- IEEE 802.3at/bt PoE compliant

Dimensions *(mm)*

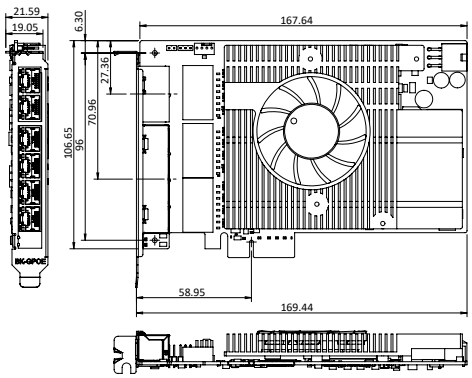

Specifications

- Interface
  PCI Express® x4
- Ethernet
  6 x Intel® i211AT controller
  9kB jumbo frame
- Fan
  One 1x4 pin fan
- PWR Input
  12~24V DC input
  1 x Internal DC input (2x3 pin)
- PoE Capability
  IEEE 802.3at with 30W / 52V per port
  IEEE 802.3bt with 90W / 52V per port
  (Support for total 180 watts under full load)
- Software
  IEI GPOE Management Tools (Windows/Linux)
- Operating Temperature
  0°C ~ 60°C
- Storage Temperature
  -10°C ~ 70°C
- Operating Humidity
  5% ~95%, non-condensing
- Dimensions
  169.44 mm x 106.65 mm
- Weight
  286g
- CE/FCC compliant

Packing List

1 x GPOE-6P card with cooler
1 x QIG

Part No.	Description
GPOE-6P-R10	PCI Express Power over ethernet card, 6-port 1000 Base(T), 802.3at / bt compliant, RoHS
32102-044900-100-RS	WIRE cable, power cable, PCIE power cable 3, 100MM, 20AWG, (A)MOLEX 8981-04M P=5.08*2, (B)TKP:H6657R1-06-B-03 P=4.2, Polywell, RoHS
32102-045800-100-RS	WIRE cable, power cable, 2, 300MM, 20AWG, (A) DC JACK 5.5*2.1+NUT+WASHER (Smcts:655-353), (B) TKP: H6657R1-06-B-03 P=4.2, Polywell, RoHS
63040-010065-200-RS	Adapter Power, FSP, FSP065-REBN2, 9NA0654709, Vin:90~264VAC, 65W, Dim:46.3x108.3x30mm, Plug=7.5mm, Cable=1500mm, Erp (NO LOAD 0.1W), Vout:19VDC, Φ2.1/Φ5.5/lock, CCL, RoHS
63040-010090-120-RS	Adapter Power, FSP, FSP090-DIEBN2, 9NA0904712, Vin:90~264VAC, 90W, Plug=7.5mm, Cable=1500mm, Erp (NO LOAD 0.5W), Vout:19VDC, Φ2.1/Φ5.5/lock, CCL, RoHS

LAN-100G2SF-E810

Intel® Ethernet Controller EZE810CAM2 based PCIe Card with 2 x QSFP28 by 1 PCIe 4.0 x16 interface

New

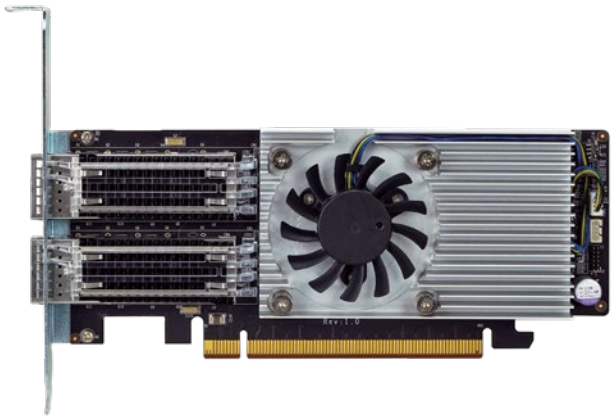

Dimensions

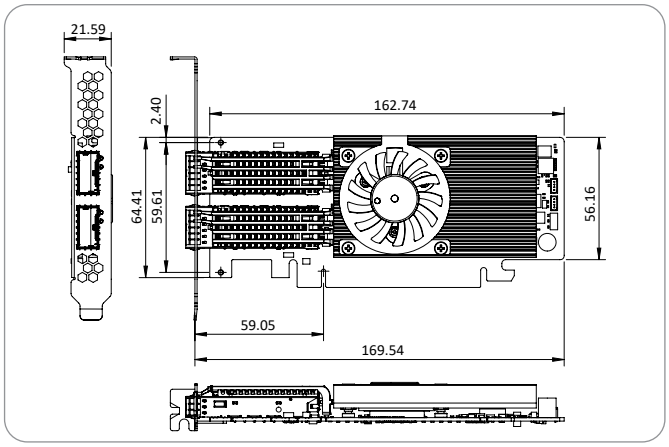

Features

- 1 x intel E810 Ethernet controller
- 2 ports 100GbE QSFP28 connector
- 1 x PCIe 4.0 x16

Specifications

- ◆ Form Factor
  Low profile PCI Express® add on card
- ◆ NIC
  Intel® E810
- ◆ LAN Interface
  QSFP28
- ◆ Speed
  100GbE
- ◆ LAN Ports
  2 x LAN ports
- ◆ Host Interface
  1 PCIe 4.0 x16
- ◆ Storage Temperature
  -20°C ~ 75°C (-4°F ~ 167°F)
- ◆ Operating Temperature
  0°C ~ 40°C (32°F ~ 104°F)
- ◆ Operating Humidity
  5% ~ 90% RH, Non-condensing
- ◆ Dimensions (mm)
  165.50 (L) x 77.8 (W) x 44.2 (H)
- ◆ RoHS compliant

Packing List

1 x LAN-100G2SF-E810 Module
1 x QIG

Ordering Information

Part No.	Description
LAN-100G2SF-E810-R10	Intel® Ethernet Controller EZE810CAM2 based PCIe Card with 2 x QSFP28 by 1 PCIe 4.0 x16 interface

IPCIE-4POE

PCI Express Power over Ethernet card, 4-port 1000 Base(T), 802.3af compliant



Features

- PCI Express® x4 compliant
- Support for IEEE 802.3af for PoE (Power over Ethernet) with 15.4 watts per port
- Support link aggregation/jmbo frames (9 Kbyte)
- Supports 12~24 AT/ATX DC input power

Dimensions *(mm)*

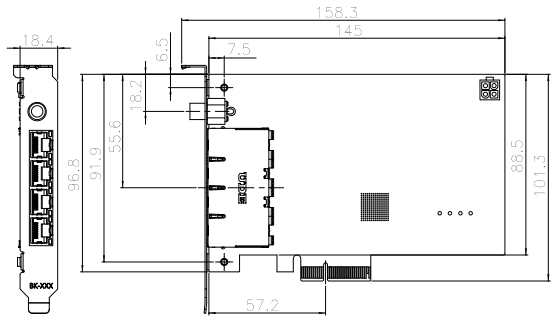

Specifications

- ◆ Interface: PCI Express® x4
- ◆ Ethernet
  Intel® i210 AT controller
  9kB jumbo frame
  IEEE 802.3az, IEEE1588
- ◆ PoE Capability
  IEEE 802.3af
  15.4W / 48V DC per port
- ◆ PWR Input
  12~24V DC input
  Internal DC input (2x2 ATX)
  External DC input (Φ2.1/Φ5.5)
- ◆ Operating Temperature: 0°C ~ 60°C
- ◆ Storage Temperature: -10°C ~ 70°C
- ◆ Operating Humidity: 5% ~ 95%, non-condensing
- ◆ CE/FCC compliant

Packing List

1 x IPCIE-4POE card
1 x QIG

Ordering Information

Part No.	Description
IPCIE-4POE-R10	PCI Express Power over Ethernet card, 4-port 1000 Base(T), 802.3af compliant
63040-010090-120-RS	Adapter power, FSP, FSP090-DIEBN2, 9NA0904712, Vin: 90~264VAC, 90W, Plug=7.5mm, Cable=1500mm, Erp (no load 0.5W), Vout: 19VDC, Φ2.1/Φ5.5/lock, CCL, RoHS
63040-010065-200-RS	Adapter power, FSP, FSP065-REBN2, 9NA0654709, Vin: 90~264VAC, 65W, Dim: 46.3x108.3x30mm, Plug=7.5mm, Cable=1500mm, Erp (no load 0.1W), Vout: 19VDC, Φ2.1/ Φ5.5/lock, CCL, RoHS

MPCIE-DLAN-R10

PCI Express Mini Dual Intel® GbE LAN Module, Full Size, RoHS

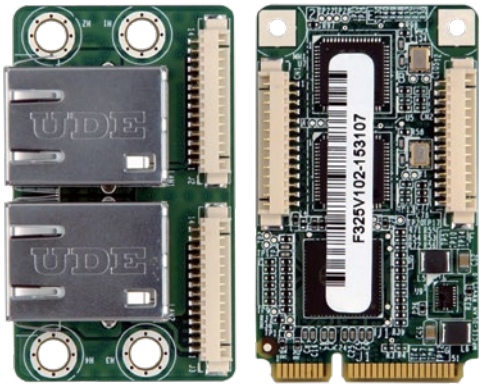

Specifications

- Form Factor: PCI Express Mini card
- BIOS: UEFI BIOS
- Ethernet Controller: Dual Intel® I210-IT
- Speed: 10/100/1000Mbps
- External Connector: 2 x 8-pin RJ-45
- Power Supply: On board 3.3V
- Compitable OS
  Windows XP/Server 2003/ Server 2008/ Vista/ 7 /8.1/10
  Linux kernel version 2.6.32 above
- Operating Temperature: -10°C ~ 70°C
- Operating Humidity: 5% ~ 95%, non-condensing
- Dimensions (LxW) : 51 mm x 30 mm
- Weight: 55g
- CE/FCC compliant

Dimensions (mm)

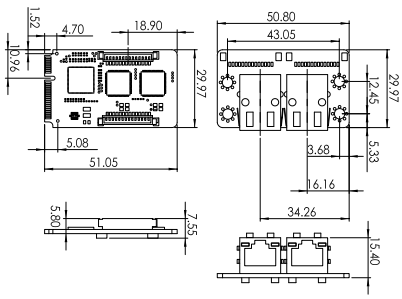

Packing List

1 x MPCIE-DLAN module	2 x Flat cable (pitch=1.25mm), 340mm length	1 x QIG

Features

- Support dual GbE LAN by Intel® I210-IT
- Compliant with PCI Express Mini specification 1.2

Ordering Information

Part No.	Description
MPCIE-DLAN-R10	PCI Express Mini dual Intel® GbE LAN module, full size, RoHS

MPCIE-LAN-R10

PCI Express Mini GbE LAN Module, Full Size, RoHS

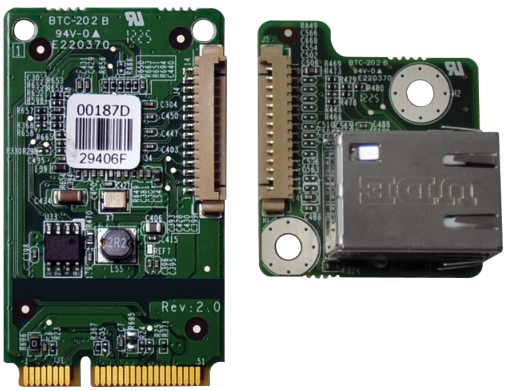

Specifications

- Form Factor: PCI Express Mini card
- Ethernet Controller: Realtek RTL8111E
- Speed: 10/100/1000Mbps
- External Connector: 1 x 8-pin RJ-45
- Compitable OS
  Windows 2000/ XP/ Server 2003/ Server 2008/ Vista/ 7
  Linux kernel version 2.6.32 above
- Power Supply: On board 3.3V
- Operating Temperature: -10°C ~ 70°C
- Operating Humidity: 5% ~ 95%, non-condensing
- Dimensions (LxW): 51 mm x 30 mm
- Weight: 70g
- CE/FCC compliant

Dimensions (mm)

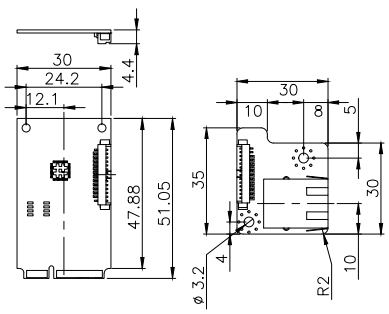

Packing List

1 x MPCIE-LAN module	1 x Flat cable (pitch=1.25mm), 340mm length	1 x QIG

Features

- Support one GbE LAN by RTL8111E
- Compliant with PCI Express Mini specification 1.2

Ordering Information

Part No.	Description
MPCIE-LAN-R10	PCI Express Mini GbE LAN module, full size, RoHS

MPCIE-3G-R20

PCI Express Mini 3G Adapter Card, RoHS

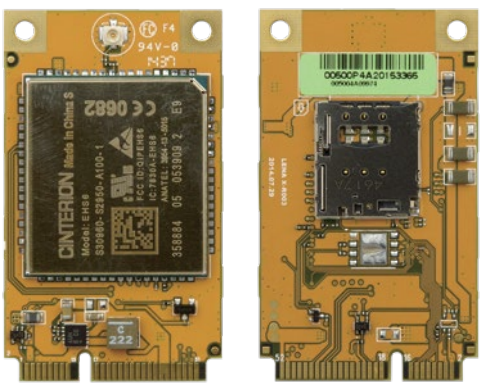

Specifications

- Form Factor
  PCI Express Mini card
  Antenna 50Ohms. Main GSM/UMTS antenna
- Frequency Bands
  GSM/GPRS/EDGE:
  850/900/1800/1900 GPRS/EDGE Class12
  UMTS/HSPA+:
  Dual band UMTS 800/850/900/1900/2100 MHz
- USB
  USB 2.0 High Speed (480Mbit/s) device interface
- Compatible OS
  Windows®8, Windows®7, Windows EC, Linux, Android
- Operating Temperature
  Normal operation: -30°C to +85°C
  Restricted operation: -40°C to +95°C
- Dimensions (W x D x H)
  51.0 mm × 30.0 mm × 4.75 mm

Packing List

1 x PCI Express Mini 3G adapter card

Features

- Real time clock: Timer functions via AT commands
- Phonebook: SIM and phone
- TTY/CTM support: Integrated CTM modem

Ordering Information

Part No.	Description
MPCIE-3G-R20	PCI Express Mini 3G adapter card, RoHS
32501-000705-100-RS	RF antenna cable
32503-000100-100-RS	GSM antenna cable

MPCIE-UART-KIT01-R20

PCI Express Mini Card Supports Quad-port RS-232/422/485, Full Size, RoHS

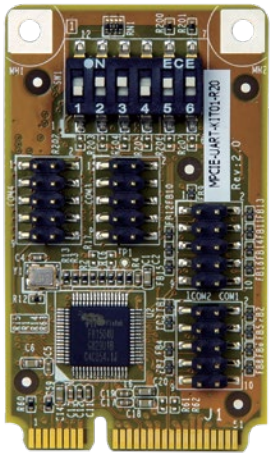

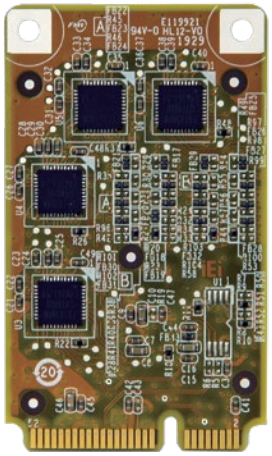

Features

- PCI Express Mini supports quad-port RS-232/422/485
- 128 bytes transmit/receive FIFO
- High-speed 16C550/16C650/16C750/16C850 compatible UARTs
- Baud rate supports 115.2K, max. up to 1.5M

Dimensions (mm)

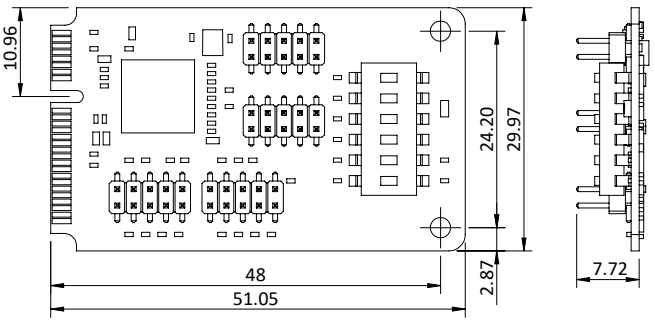

Specifications

- Form Factor: PCI Express Mini card
- PCI Express Bridge to Quad Serial Port: Fintek F81504
- Buffer/Transceiver Series: F81439
- IO: 4 x RS-232/422/485 (2x5 pin header)
- Operating Temperature: 0°C ~ 60°C
- Operating Humidity: 5% ~ 95%, non-condensing
- Dimensions (LxW): 51 mm x 30 mm
- Weight: GW: 100g / NW: 50g
- CE/FCC compliant

Packing List

1 x MPCIE-UART-KIT01 module	
4 x D-SUB9 male cable	1 x QIG

Ordering Information

Part No.	Description
MPCIE-UART-KIT01-R20	PCI Express Mini card supports quad-port RS-232/422/485, full size, RoHS
E-MPCIE-UART-KIT01-R20	PCI Express Mini supports quad RS-232/422/485 port module, full size, for E-Window, RoHs

MPCIE-UART-KIT02-R20

PCI Express Mini Card Supports Dual-port RS-232/422/485, 16-bit GPIO, Full Size, RoHS

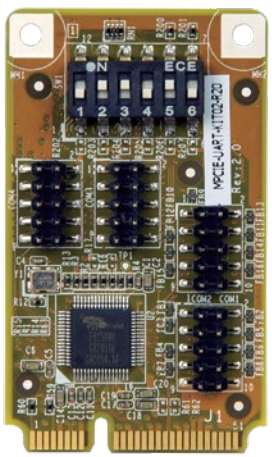

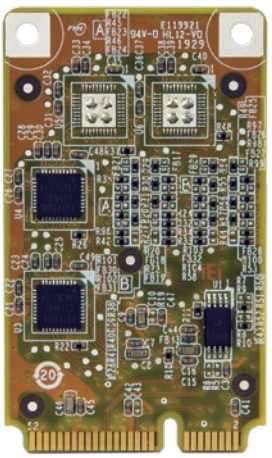

Features

- PCI Express Mini supports dual RS-232/422/485 and 16-bit GPIO ports
- 128 bytes transmit/receive FIFO
- High-speed 16C550/16C650/16C750/16C850 compatible UARTs
- Baud rate supports 115.2K, max. up to 1.5M
- All GPIO supports digit IO for input/output control, output data control, input status
- Support High/Low Level/Pulse, Open Drain/Push Pull function selection

Dimensions (mm)

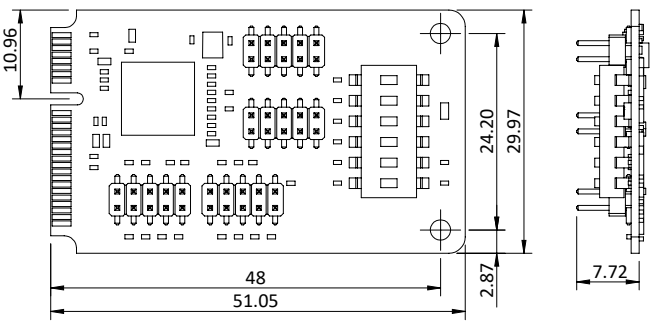

Specifications

- Form Factor: PCI Express Mini card
- PCI Express Bridge to Quad Serial Port: Fintek F81504
- Buffer/Transceiver Series: F81439
- IO
  2 x RS-232/422/485 (2x5 pin header)
  2 x 8 bit GPIO (2x5 pin header)
- Operating Temperature: 0°C ~ 60°C
- Operating Humidity: 5% ~ 95%, non-condensing
- Dimensions (LxW): 51 mm x 30 mm
- Weight: GW: 100g / NW: 50g
- CE/FCC compliant

Packing List

1 x MPCIE-UART-KIT02 module	
2 x D-SUB 9 male cable	1 x QIG

Ordering Information

Part No.	Description
MPCIE-UART-KIT02-R20	PCI Express Mini card supports dual-port RS-232/422/485, 16-bit GPIO, full size, RoHS
E-MPCIE-UART-KIT02-R20	PCI Express Mini supports dual RS-232/422/485, 16 bit GPIO module, full size, for E-Window, RoHs

MPCIE-USB3

PCIe Mini USB 3.2 Gen 1 (5Gb/s) Adapter Card, RoHS

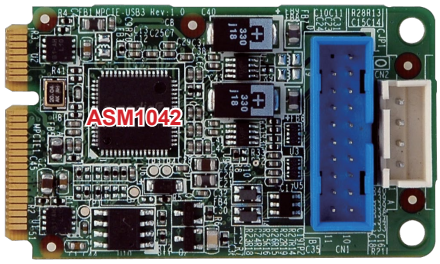



IEI USB 3.2 Gen 1 (5Gb/s) Expanded Solution

The MPCIE is applied to add additional super speed USB 3.2 Gen 1 (5Gb/s) ports for the motherboard with a PCIe Mini slot.

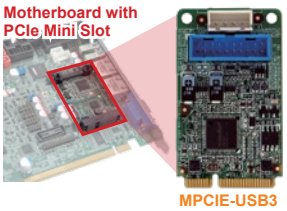

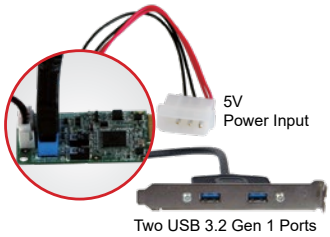

Specifications

- Form Factor
  PCI Express Mini card
- USB 3.2 Gen 1 (5Gb/s) Controller
  Asmedia ASM1042A
- Internal Connector
  1 x 20-pin (2x10) box header
- Power Jack
  1 x 4-pin box header
- Compatible OS
  Windows® XP/Server 2003/Server 2008/Vista/7/8.1/10
  Linux kernel version 2.6.32 above
- Operating Temperature
  -10°C ~ 60°C
- Operating Humidity
  5% ~ 95%, non-condensing
- Dimensions (LxW)
  50 mm x 30 mm
- Weight
  70g
- CE/FCC compliant

Features

- Supports two external USB 3.2 Gen 1 (5Gb/s) type A ports
- USB 3.2 Gen 1 (5Gb/s) provides up to 5Gbps of transferring rate
- Backward compatible with USB 2.0 and USB 1.0/1.1 devices
- Fully compliant with USB 3.2 Gen 1 (5Gb/s) rev 1.0 specifications and Intel® xHCI rev 0.96 specifications, with transfer rates up to 5Gbps
- Compliant with PCI Express Mini specification 1.2

Packing List

1 x MPCIE-USB3 PCIe Mini USB 3.2 Gen 1 (5Gb/s) adapter card	
1 x Dual USB 3.2 Gen 1 (5Gb/s) type A port cable with bracket	
1 x Power cable	1 x QIG

Dimensions (mm)

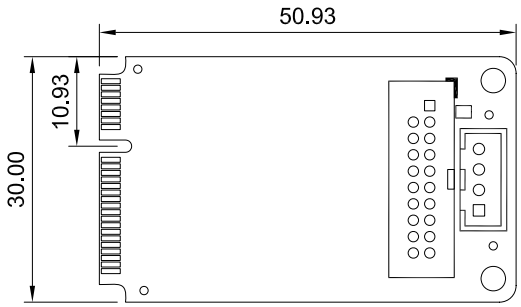

Ordering Information

Part No.	Description
MPCIE-USB3-R11	PCIe Mini USB 3.2 Gen 1 (5Gb/s) adapter card, RoHS
19800-010500-200-RS	Dual USB 3.2 Gen 1 (5Gb/s) type A port cable with bracket

EMB-WIFI-KIT

PCIe Mini card wireless LAN module kit



Features

- Half size PCIe Mini card form factor
- High speed wireless connection up to 433.3Mbps transmit/receive PHY rate using 80MHz bandwidth
- Low power consumption and high performance
- Fully qualified Bluetooth 4.0
- Solid design with external antenna diversity

Specifications

Model Name	EMB-WIFI-KIT
Standard	IEEE 802.11a/b/g/n/ac, Wi-Fi compliant / Bluetooth4.0 Standard
Major chipset	Realtek RTL8821AE
Antenna	2x standard U.FL Connector
Frequency range	Wi-Fi: 2.4GHz/5GHz, BT: 2402MHz~2483MHz
Modulation	Wi-Fi: 802.11a/g/n/ac: OFDM 802.11b: CCK(11, 5.5Mbps), DQPSK(2Mbps), BPSK(1Mbps)
Receive Sensitivity	Wi-Fi: 802.11a: less than -65 dBm (54M) 802.11b: less than -76 dBm (11M) 802.11g: less than -65 dBm (54M) 802.11n @2.4GHz: less than -64 dBm (HT20 MCS7) 802.11n @2.4GHz: less than -61 dBm (HT40 MCS7) 802.11n @5GHz: less than -64 dBm (HT20 MCS7) 802.11n @5GHz: less than -61 dBm (HT40 MCS7) 802.11ac @5GHz: less than -51 dBm (VHT80 MCS9) BT: BER < 0.1% (Anritsu 8852B Tx -70 dBm)
Driver support	Windows 7/8/10, Linux kernel 3.18
Temperature	0°C ~ 70°C
Dimensions	29.85mm x 26.65mm x 1.5mm
Weight	NW: 3.28g

Ordering Information

Part No.	Description
EMB-WIFI-KIT01-R20	1T1R wifi module kit for embedded system, IEEE802.11a/b/g/n/ac WiFi with Bluetooth 4.0/3.0+HS, 1 x wifi module, 2 x 250mm RF cable, 2 x Antenna, RoHS
EMB-WIFI-KIT11-R20	1T1R wifi module kit for embedded system, IEEE802.11a/b/g/n/ac WiFi with Bluetooth 4.0/3.0+HS, 1 x wifi module, 2 x 400mm RF cable, 2 x Antenna, RoHS

IEI Trusted Platform Module (TPM)

Hardware-based security solution for data protection and reliable authentication via TPM that stores key, passwords and digital certificates.

H/W Features

Solution / Features	Infineon SLB9660 TT1.2	SLB9665TT2.0
		
Secure Startup	Root of Trust Measurement of early boot devices	
Anti H/W Attack	Sensors and active shield	
TSS API Support	MS-CAPI/PKCS#11, #12	
H/W Certification	EAL 4	
Management Tool Function	1. TPM management 2. File & Folder En/De-cryption 3. Personal secure drive 4. Secure Email 5. Key transferring 6. Security policy configuration	
Market Segment	Complete TPM1.2/2.0 function	
TCG Specification	TCG 1.2/2.0 compliant trusted platform module	
Interface	Low pin count	
Software Structure	TCG software stack 1.2 complaint	
Cryptographic Accelerator	HAS-1/RSA algorithm	

IEI SBC with TPM support

Form factor	Model name	Form factor	Model name
PICMG1.3	PCIE-Q170-i2*	Micro-ATX	IMB-H110*
	SPCIE-C236-i2*		IMB-Q870-i2
	SPCIE-C2260-i2		IMB-H810-i2
	PCIE-H810		IMB-Q770
	PCIE-Q670		IMB-Q670
PICMG1.0	WSB-H810		IMB-H610A/H610B
	WSB-H610	Mini-ITX	KINO-DH310
Half-size PCIe	PICOe-B650		tKINO-BW
	PICOe-HM650		KINO-DBT
Half-size PCISA	PCISA-BT		KINO-SE/KBN-i2
ATX	IMBA-C2360-i2*		KINO-DH810
	IMBA-Q170-i2*		eKINO-BT
	IMBA-H110*		KINO-ABT-i2
	IMBA-BDE		KINO-AQ870
	IMBA-H810		KINO-DQM871-i1
	IMBA-C2260-i2		KINO-QM770
	IMBA-Q870-i2		KINO-DH610
	IMBA-H610		KINO-AH612
	IMBA-Q670		
EPIC SBC	NANO-QM871		
	NANO-QM770		
	NANO-HM650		

* TPM 2.0 is supported by these models.

Pin Assignment



Pin	Singnal	Pin	Singnal	Pin	Singnal	Pin	Singnal
1	LCLK	6	VCC5	11	LAD0#	16	SERIRQ
2	GND	7	LAD3#	12	GND	17	GND
3	LFRAME#	8	LAD2#	13	SCL	18	CLKRUN#
4	KEYWAY	9	VCC3	14	SDA	19	LPCPD#
5	LRST#	10	LAD1#	15	SB3V	20	LDRQ#

Ordering Information

Model Name	Description
TPM-IN01-R20	20-pin Infineon TPM1.2 module, software management tool, firmware v4.4
TPM-IN02-R20	20-pin Infineon TPM2.0 module, software management tool, firmware v5.5

Dimensions (mm)

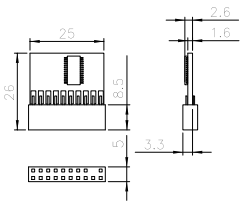

TPM-IN03

SPI TPM 2.0 module, software management tool, firmware v7.85

New

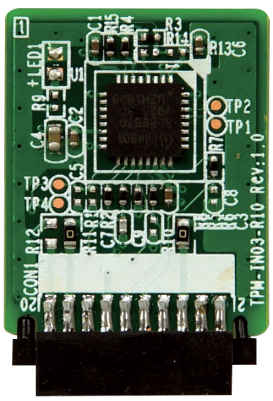

Specifications

- Interface
  SPI interface
- Solution
  Infineon SPI TPM 2.0 with SLB9670VQ2.0 FW7.85
- Management Tool Function
  1. TPM management
  2. File & Folder En/De-cryption
  3. Personal secure drive
  4. Secure email
  5. Key transferring
  6. Security policy configuration
  7. SPI interface
- Market Segment
  Complete TPM 2.0 function
- OS Support: Windows® & Linux
- Operating Temperature: 0°C ~ 60°C
- Storage Temperature: -20°C ~ 70°C
- Operating Humidity
  5% ~ 95%, non-condensing
- Dimensions (LxW): 26mm x 18mm

Dimensions (Unit: mm)

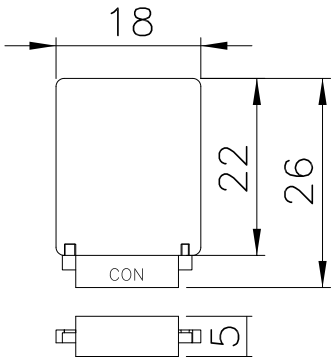

SPI TPM Support List

Form factor	Model name
Medical Panel PC	POCi-W22C-ULT5
EPIC SBC	NANO-ULT5
DIN-Rail Embedded System	DRPC-230-ULT5
	DRPC-330-A7K

Packing List

1 x 20-pin TPM module

Ordering Information

Part No.	Description
TPM-IN03-R10	20-Pin Infineon SPI TPM 2.0 module with SLB9670VQ2.0, software management tool, firmware v7.85.

SATA to CFast™ Converter Board

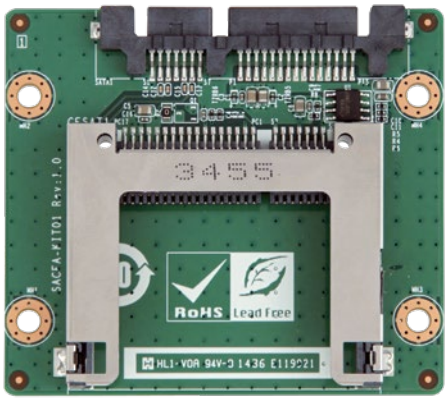

SACFA-KIT01-R10

SATA to CFast™ converter board



32801-000100-300-RS

Dimensions *(Unit: mm)*

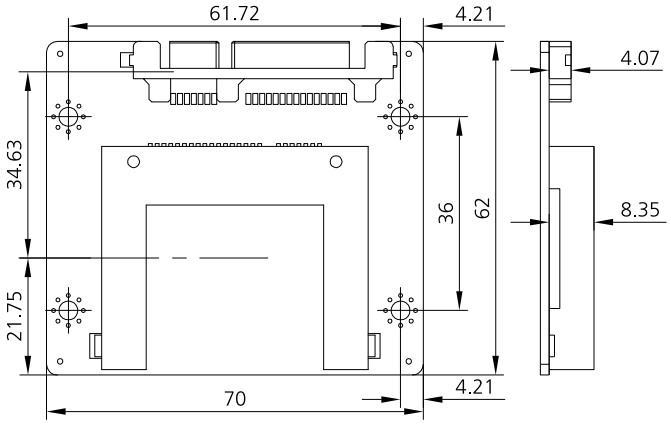

Features

- CFast™ socket
- 7-pin SATA data connector, and a female 17-pin power CFast™ connector

Packing List

1 x SACFA-KIT01-R10	1 x QIG

Ordering Information

Part No.	Description
SACFA-KIT01-R10	SATA to 24-pin CFast™ socket converter board
32000-080700-RS	SATA 7+15P female to SATA 7P / PH 5.08 4P cable, L=200mm/100mm
32801-000100-100-RS	SATA 7+15P female to SATA 7P / PH 2.5 4P cable, L=200mm/200mm
32801-000201-100-RS	SATA 7+15P female to SATA 7P / PH 2.0 2P cable, L=150mm/150mm

SATA to IDE/CF Type II Converter Board

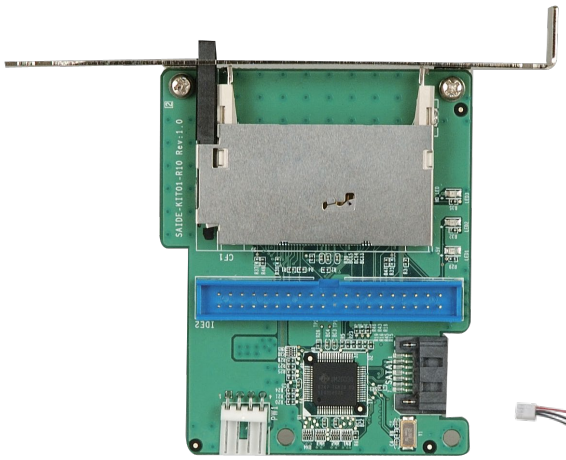

SAIDE-KIT01-R10

SATA to IDE/CF converter board



32100-064401-RS

Dimensions *(Unit: mm)*

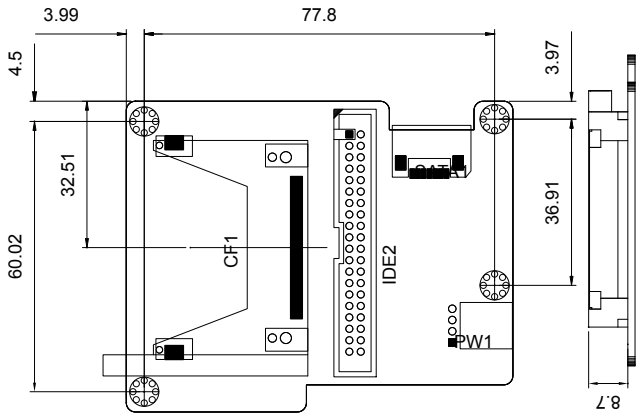

Packing List

1 x SAIDE-KIT01-R10	
1 x Power cable	1 x QIG

Features

- CF Type II socket
- 40-pin IDE connector (master mode)
- 4-pin 5V input connector
- Power/5V/HDD LED indicator
- Support one IDE device or one CF

Ordering Information

Part No.	Description
SAIDE-KIT01-R10	SATA to 40-pin IDE/CF socket converter board with bracket
32000-062800-RS	SATA cable
32100-064401-RS	Power cable
32102-000100-200-RS	SATA power cable

SATA to CF Type II Converter Board

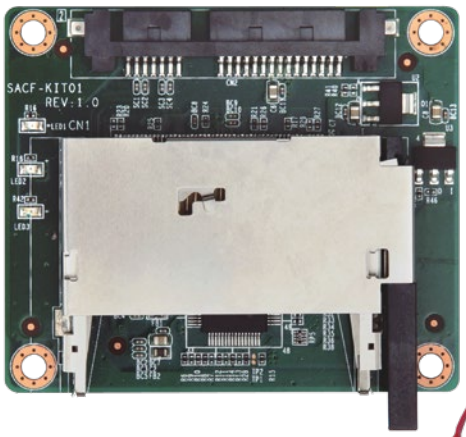



32801-000100-300-RS

SACF-KIT01-R10

SATA to CF converter board

Dimensions *(Unit: mm)*

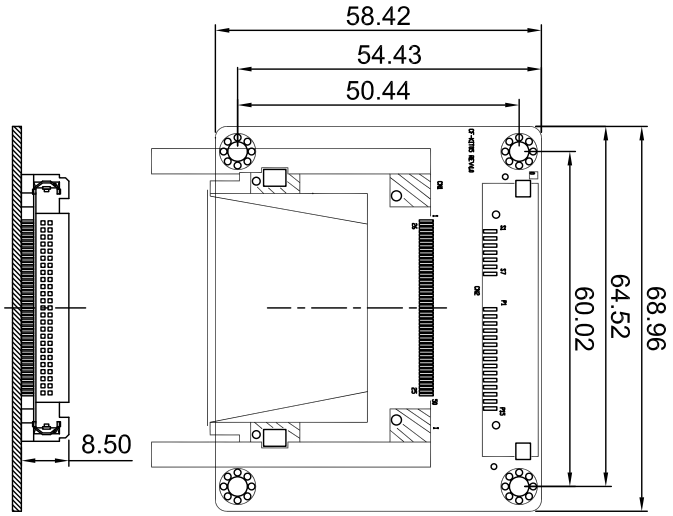

Features

- CF Type II socket
- 50-pin CF Type II connector

Packing List

1 x SACF-KIT01-R10	
1 x SATA with power cable kit	1 x QIG

Ordering Information

Part No.	Description
SACF-KIT01-R10	SATA to 50-pin CF socket converter board

IDE/CF Type II Converter Board



CF-KIT04-R10

IDE to CF Type II converter board with master/slave mode selection

IEI CF Solution



iCF1000 Industrial standard grade



iCF1000 Wide Temp. grade

Dimensions *(Unit: mm)*

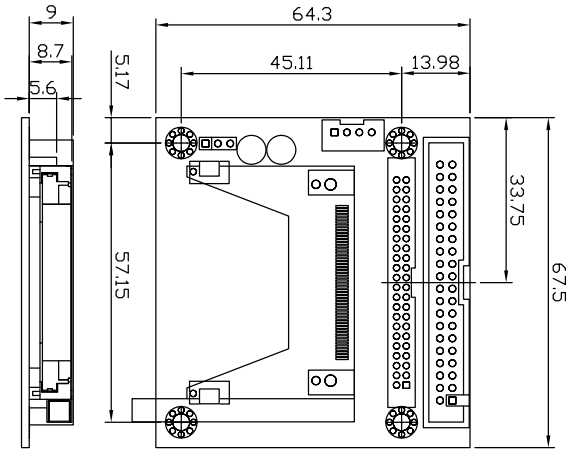

Features

- CF Type II socket with master/slave mode selection
- 4-pin power connector
- Power/HDD signal LED

IEI iDP Introduction

iDP (IEI Internal DisplayPort)

The iDP connector is provided on the IEI products. Through the IEI iDP converter cards, the iDP connector can support different display specifications, such as VGA, HDMI, DVI-D and LVDS.

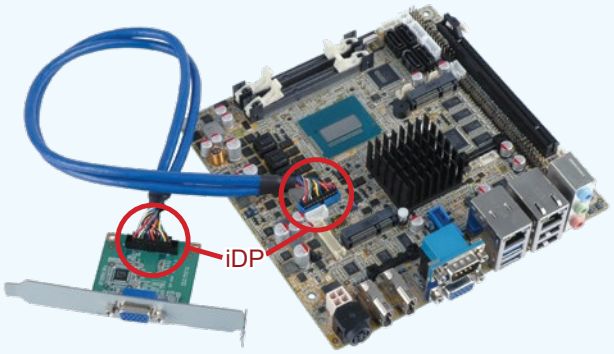

Flexible Display Output Options

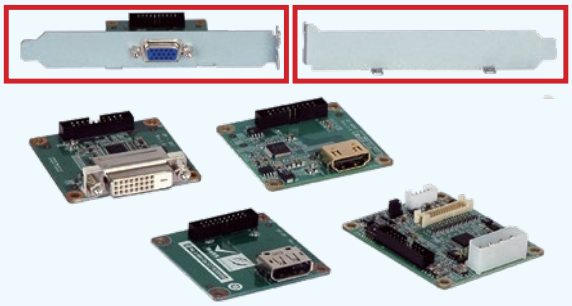

iDP converter cards with brackets

Easy Installation on the Chassis

iDP Supported Models			
HPCIE-C236	IMBA-Q170-i2	KINO-DH110	WAFER-AL
HPCIE-Q710	IMBA-H110	KINO-AQ170	WAFER-ULT3/ULT4
SPCIE-C236	IMBA-Q870-i2	KINO-DH810	WAFER-BTW2
PCIE-Q170	IMBA-C2260-i2	KINO-DQM871-i1	WAFER-BT-i1
SPCIE-C2260-i2	IMB-H110	KINO-ABT-i2	WAFER-ULT/ULT2-i1
PCIE-Q870-i2	IMB-Q870-i2	NANO-AL/ALW2	WAFER-KBN-i1
IMBA-C2360-i2	IMB-H810-i2	NANO-ULT3	

DP-DP-R10

DisplayPort Expansion Board (for IEI iDP Connector), RoHS



Features

- DisplayPort to DisplayPort output
- Resolution support up to 1920x1200

Specifications

- Display Input: 1 x IEI iDP connector
- Display Output: 1 x DisplayPort
- Temperature: -20°C ~ 60°C
- Humidity: 5 ~ 95% non-condensing
- Dimensions: 50 mm x 50 mm

Dimensions (mm)

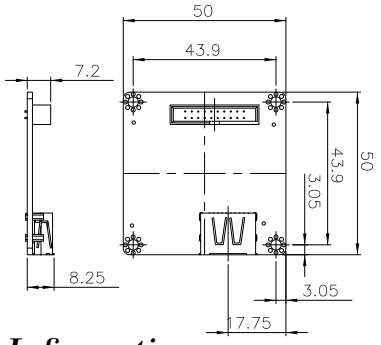

Packing List

1 x DP-DP expansion board	1 x QIG
1 x IEI iDP connector cable, 450 mm length	

Ordering Information

Part No.	Description
DP-DP-R10	DisplayPort expansion board (for IEI iDP connector), RoHS
32034-000900-100-RS	Round cable, displayport cable, 2, 450mm, 28AWG, (A) USB 3.2 20P P=2.0*2, lintes, RoHS

DP-HDMI-R10

DisplayPort to HDMI 1.3a Converter Board (for IEI iDP connector), RoHS

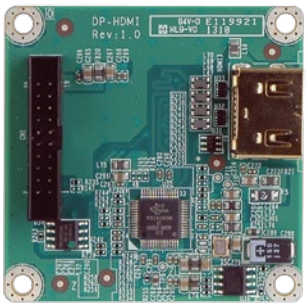

Features

- DisplayPort to HDMI 1.3a output
- Support up to 1920x1200 resolution

Specifications

- Display Input: IEI iDP connector
- Display Output: 1 x HDMI 1.3a
- Display IC: Parade - PS161 (DP to HDMI 1.3a)
- Temperature: -10°C ~ 60°C
- Humidity: 5 ~ 95% non-condensing
- Dimensions: 50 mm x 50 mm

Dimensions (mm)

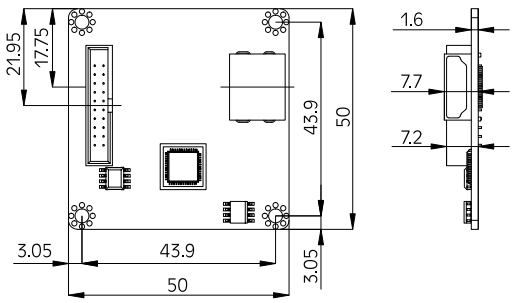

Packing List

1 x DP-HDMI converter board	1 x QIG
1 x Internal DisplayPort cable, 450 mm length	

Ordering Information

Part No.	Description
DP-HDMI-R10	DisplayPort to HDMI 1.3a converter board (for IEI iDP connector), RoHS

DP-LVDS-R10

DisplayPort to 24-bit Dual-channel LVDS Converter Board (for IEI iDP Connector), RoHS

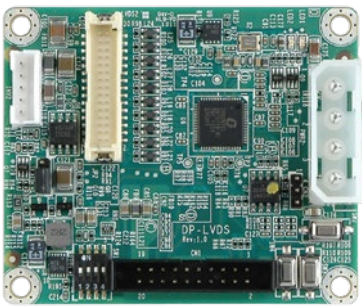

Features

- DisplayPort to LVDS output
- Supports 24-bit dual-channel up to 1920x1200

Specifications

- Display Input: 1 x IEI iDP connector
- Display Output: 1 x LVDS 24-bit dual-channel
- Display IC: Chrontel - CH7511B (DP to LVDS)
- Temperature: -10°C ~ 60°C
- Humidity: 5% ~ 95 non-condensing
- Dimensions: 60 mm x 50 mm

Dimensions (mm)

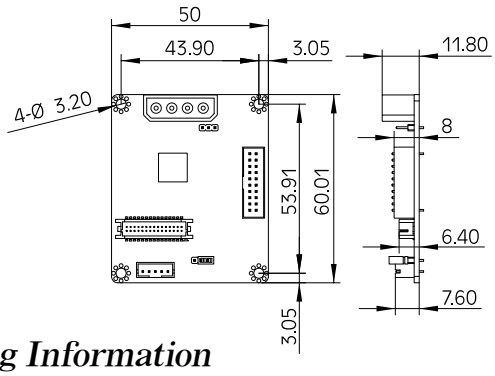

Packing List

1 x DP-LVDS converter board	1 x QIG
1 x Internal DisplayPort cable, 450 mm length	

Ordering Information

Part No.	Description
DP-LVDS-R10	DisplayPort to 24-bit dual-channel LVDS converter board (for IEI iDP connector), RoHS

DP-VGA-R10

DisplayPort to VGA Converter Board (for IEI iDP Connector), RoHS

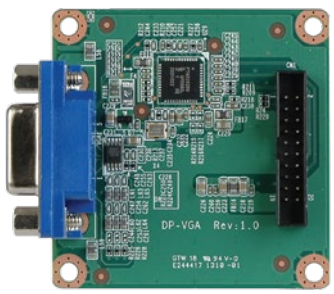

Features

- DisplayPort to VGA output
- Support up to 1920x1200 resolution

Specifications

- Display Input: 1 x IEI iDP connector
- Display Output: 1 x VGA
- Display IC: NXP - PTN3392 (DP to VGA)
- Temperature: -10°C ~ 60°C
- Humidity: 5% ~ 95 non-condensing
- Dimensions: 50 mm x 50 mm

Dimensions (mm)

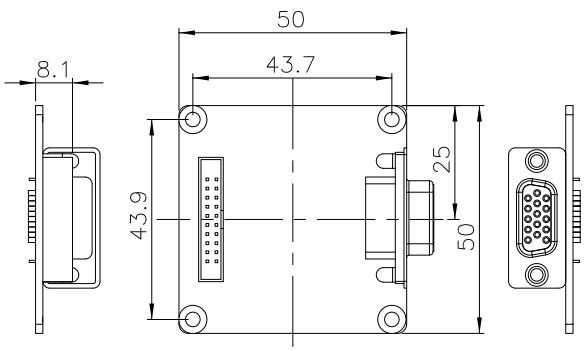

Packing List

1 x DP-VGA converter board	1 x QIG
1 x Internal DisplayPort cable, 450 mm length	

Ordering Information

Part No.	Description
DP-VGA-R10	DisplayPort to VGA converter board (for IEI iDP connector), RoHS

DP-DVI-R10

DisplayPort to DVI Converter Board (for IEI iDP Connector), RoHS

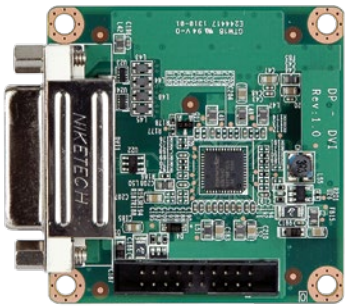

Features

- DisplayPort to DVI output
- Support up to 1920x1200 resolution

Specifications

- Display Input: 1 x IEI iDP connector
- Display Output: 1 x DVI
- Display IC: Parade - PS161 (DP to HDMI / DVI)
- Temperature: -10°C ~ 60°C
- Humidity: 5% ~ 95 non-condensing
- Dimensions: 50 mm x 50 mm

Dimensions (mm)

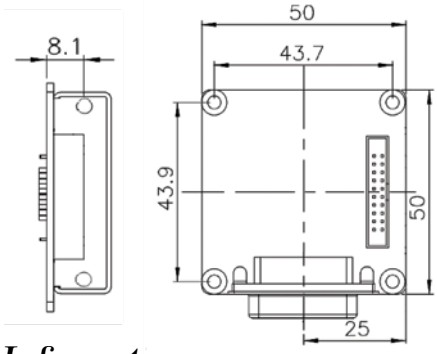

Packing List

1 x DP-DVI converter board	1 x QIG
1 x Internal DisplayPort cable, 450 mm length	

Ordering Information

Part No.	Description
DP-DVI-R10	DisplayPort to DVI converter board (for IEI iDP connector), RoHS

LVDS-VGA-R10

Single-channel LVDS to VGA Converter Board (Support IEI Model Only)

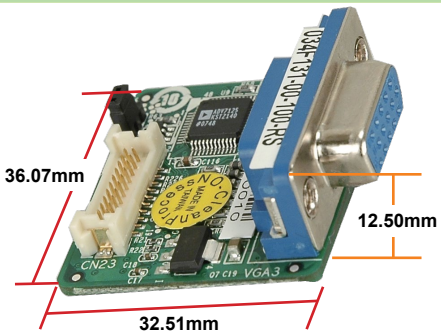

Features

- Provide 2nd VGA option for dual VGA display
- Resolution adjusted by BIOS: Support 1024x768, 800x600, 640x480
- 18-bit LVDS to VGA converter board

Dimensions (mm)

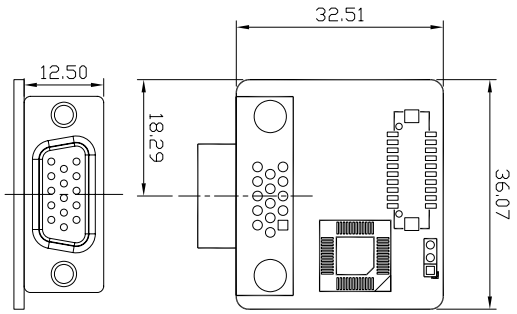

Packing List

1 x LVDS to VGA converter board
1 x QIG

Ordering Information

Part No.	Description
LVDS-VGA-R10	18-bit LVDS to VGA converter board
32602-007900-200-RS	30-pin LVDS connecting cable (300mm)
32602-026400-100-RS	20-pin LVDS connecting cable (150mm)

LVDS24-01

18-bit to 24-bit LVDS Converter Board

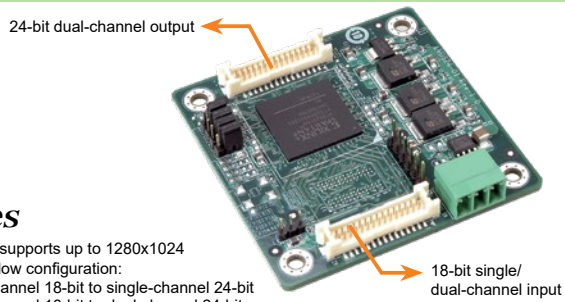

Features

- Resolution supports up to 1280x1024
- Support below configuration:
  - » Single-channel 18-bit to single-channel 24-bit
  - » Single-channel 18-bit to dual-channel 24-bit
  - » Dual-channel 18-bit to dual-channel 24-bit

* Note: The module does not support dual-channel 18-bit to single-channel 24-bit conversion.

Dimensions (mm)

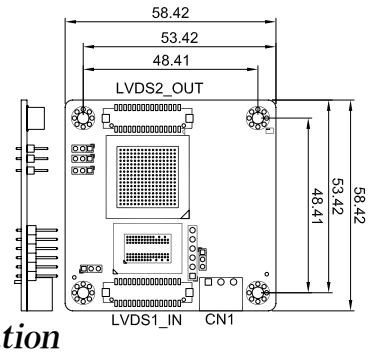

Packing List

1 x 18-bit to 24-bit LVDS converter board
1 x Power cable
1 x QIG

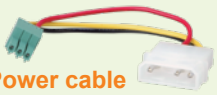

Power cable
P/N: 32100-130300-RS

Ordering Information

Part No.	Description
LVDS24-01-R10	18-bit to 24-bit LVDS converter board
32602-007900-100-RS	Single-channel 18-bit 20-pin to 24-bit 30-pin LVDS connection cable
32602-008000-200-RS	Dual-channel 18-bit 30-pin to 24-bit 30-pin LVDS connection cable

Embedded System Platform Solutions

As the leading Industrial System provider, IEI continues to extend the product footprint from component level to system integration service. Our strong knowledge of market and technology innovation offers reliability, flexibility and interoperability for all of our industrial products with choices of size, performance and features.

1. Transportation System

Model Name	Processor
IKARPC-07A	Intel® Atom™ E3826 1.46GHz
AFOKAR-08A	RockChip RK3399 (Dual-core Cortex-A72 up to 1.8GHz + Quad-core Cortex-A53 up to 1.5GHz)
IKARPC-W10A-BT	Intel® Atom™ E3826 1.46GHz
IVS-200-ULT2	Intel® Core™ i5-5350U 1.8GHz, Intel® Celeron® 3765U 1.9GHz
IVS-110-AL	Intel® Atom™ E3930 1.8GHz, Intel® Atom™ E3940 1.8GHz, Intel® Atom™ E3950 2.0GHz
IRS-100-ULT3	Intel® Core™ i5-6300U 2.4GHz
SBOX-100-QM87	Intel® Core™ i5-4400E 2.7GHz



2. Embedded Edge Computing System

Model Name	Processor
FLEX-BX210-W480	Intel® Xeon® W-1290TE 1.8GHz (up to 4.5GHz)
FLEX-BX210-Q470	Intel® Core™ i9-10900TE 1.8GHz (up to 4.5GHz) Intel® Core™ i5-10500TE 2.3GHz (up to 3.7GHz)
FLEX-BX200-C246	Intel® Xeon® E-2278GE 3.3GHz (up to 4.7GHz)
FLEX-BX200-Q370	Intel® Core™ i7-8700T 2.4GHz (up to 4.0GHz) Intel® Core™ i5-8500T 2.1GHz (up to 3.5GHz) Intel® Pentium® Gold G5400T 3.1GHz
FLEX-BX100-ULT5	Intel® Core™ i5-8365UE 1.6GHz (up to 4.1GHz) Intel® Celeron® 4305UE 2.0GHz



3. Industrial Automation System

Model Name	Processor
TANK-880-Q370	Intel® Core™ i7-9700TE 1.8GHz (up to 3.8GHz) Intel® Core™ i5-9500TE 2.2GHz (up to 3.6GHz)
TANK-871-Q170	Intel® Core™ i7-6700TE 2.4 GHz (up to 3.4GHz) Intel® Core™ i5-6500TE 2.3 GHz (up to 3.3GHz)
TANK-870-Q170	Intel® Core™ i7-6700TE 2.4 GHz (up to 3.4GHz) Intel® Core™ i5-6500TE 2.3 GHz (up to 3.3GHz)
TANK-870e-H110	Intel® Core™ i7-6700TE 2.4 GHz (up to 3.4GHz) Intel® Core™ i5-6500TE 2.3 GHz (up to 3.3GHz)
TANK-802-ULT5	Intel® Core™ i5-8365UE 1.6GHz (up to 4.1GHz), Intel® Celeron® 4205U 1.8GHz
TANK-610-BW	Intel® Celeron® N3160 1.6GHz



4. DIN-Rail Embedded System

Model Name	Processor
DRPC-330-A7K	Marvell® ARMADA® 88F7040 1.4 GHz
DRPC-230-ULT5	Intel® Core™ i5-8265U 1.6GHz (up to 3.9GHz)
DRPC-140-EHL	Intel® Atom™ Elkhart Lake SKU 10 1.9GHz
DRPC-130-AL	Intel® Atom™ x5-E3930 1.3GHz (up to 1.8GHz)
DRPC-120-BT	Intel® Atom™ E3845 1.91GHz



5. Compact Size Embedded System

Model Name	Processor
ITG-100AI	Intel® Atom™ x5-E3930 1.3GHz (up to 1.8GHz)
ITG-100-AL	Intel® Atom™ x5-E3930 1.3GHz (up to 1.8GHz)
uIBX-250-BW	Intel® Celeron® N3160 1.6GHz



6. Digital Signage Embedded System

Model Name	Processor
IDS-310AI	Intel® Celeron® N3350 1.1GHz (up to 2.4GHz)
IDS-310-AL	Intel® Celeron® J3455 1.5GHz (up to 2.3GHz) Intel® Celeron® N3350 1.1GHz (up to 2.4GHz)



Transportation Solution

IEI transportation series is divided into three categories for different markets: in-vehicle, railway and marine. All these products have passed harsh vibration and shock test and can withstand in extreme temperature. This series allows wide voltage input and features multiple communication options. In addition, our products are in fanless design suitable for various markets and with rich I/O for different applications.

Ruggedized Solution

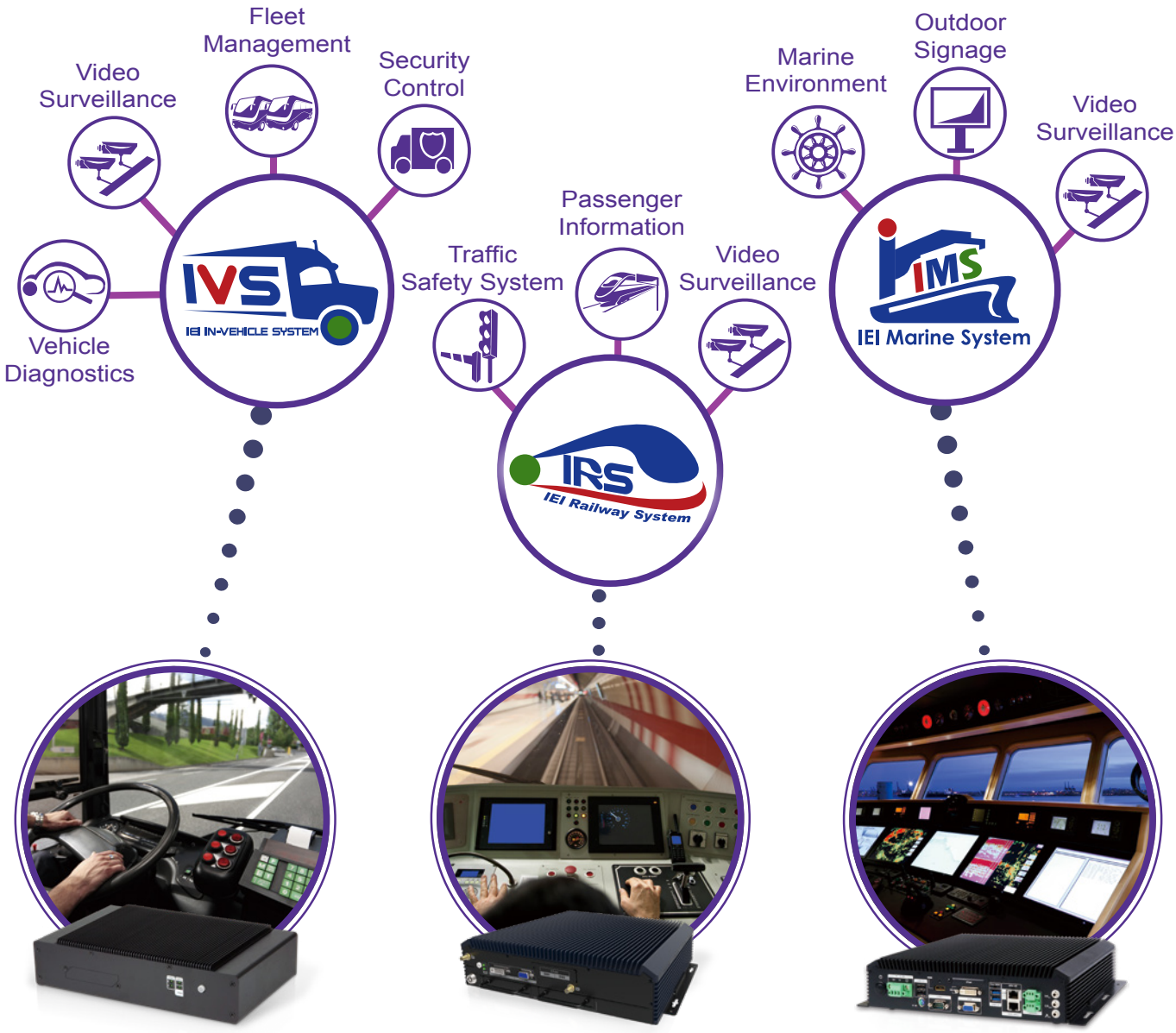

■ IVS & In-Vehicle PPC Series

In-Vehicle Features

- Wide working temperature
- Wide DC input range
- E-mark certification
- OBD-II function
- Multi wireless communication
- IP 4X protection

■ IRS Series

Railway Features

- Wide working temperature
- Support DVI and VGA dual display
- EN-50155 certification
- Dual SIM slot
- M12 connector

■ SBOX Series

Marine Features

- Isolation protection ports
- Three independent displays
- Full range dimming
- DNV, IEC 60945 4th, IACS-E10, IEC 61174 certification
- IP 4X protection

In-Vehicle PPC Series

Logistics industry's commonly used satellite positioning systems, electronic maps, Internet access, mobile communication systems with 3.75G/LTE/Wi-Fi/Bluetooth/GPS/RFID are all combined together in our solutions for fleet management, logistics, manufacturing and passenger transportation industries.

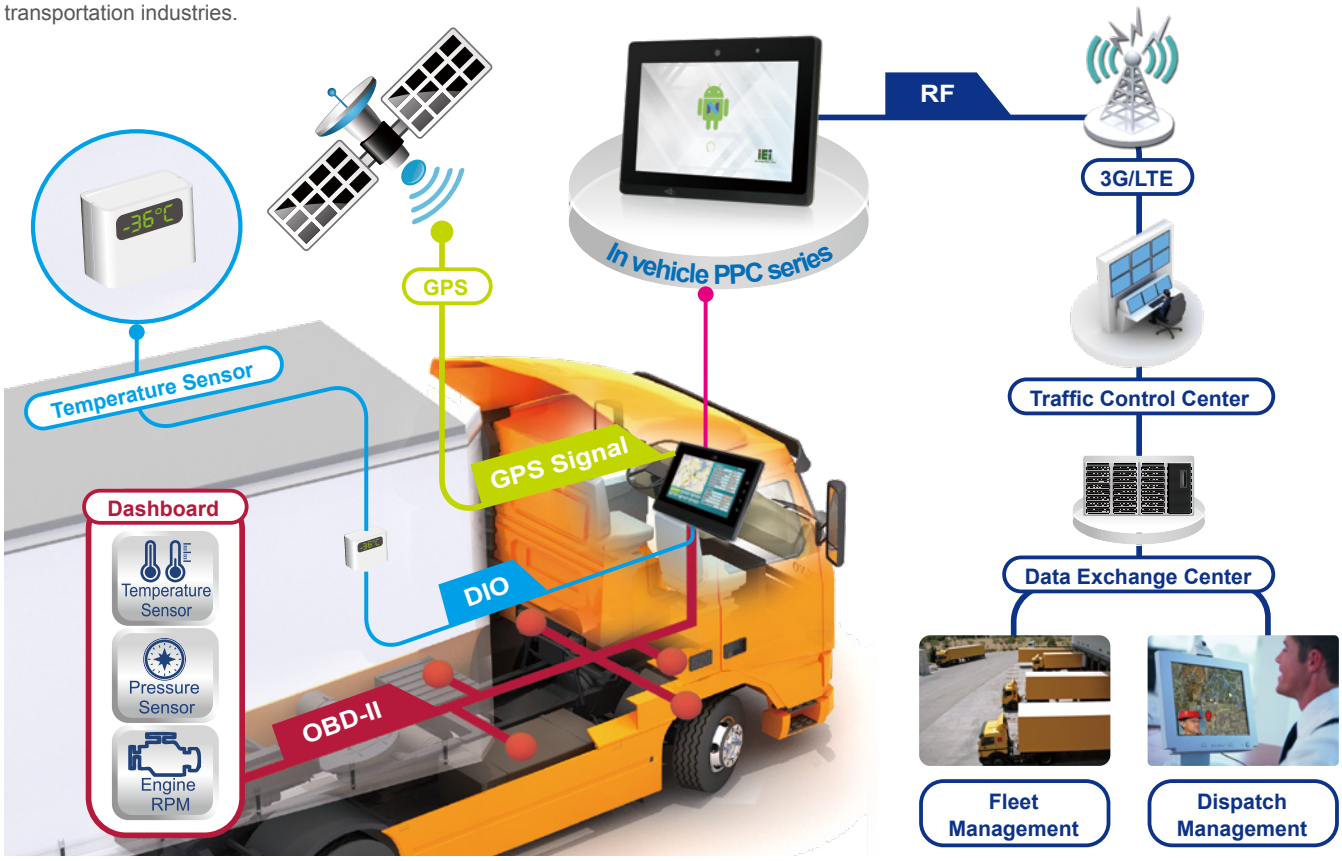

Key Features

■ High Brightness Screen

The in-vehicle panel PC series is equipped with an ultra-high brightness LCD panel to help drivers avoid low visibility caused by direct sunlight.

■ CAN Bus/OBD-II (Optional)

The in-vehicle panel PC series supports On-board Diagnostics (OBD) and Controller Area Network (CAN bus) and is built-in with OBD-II and CAN bus for real time vehicle diagnostic. CAN has a high degree of flexibility to adjust capacity which can be added in the existing network of nodes.

■ X86/ARM Solution

The in-vehicle panel PC series has two solutions, Intel and ARM architecture for customers. You can choose Intel solution which supports Windows OS, or you can choose ARM solution which supports Android OS.

■ Communication

The transportation series reserves multiple PCIe Mini slots for different network communication. Users can use CDMA/GPRS/HSUPA+/LTE to transmit and receive real-time data, use Wi-Fi for data acquisition, or use GPS to get accurate location data.

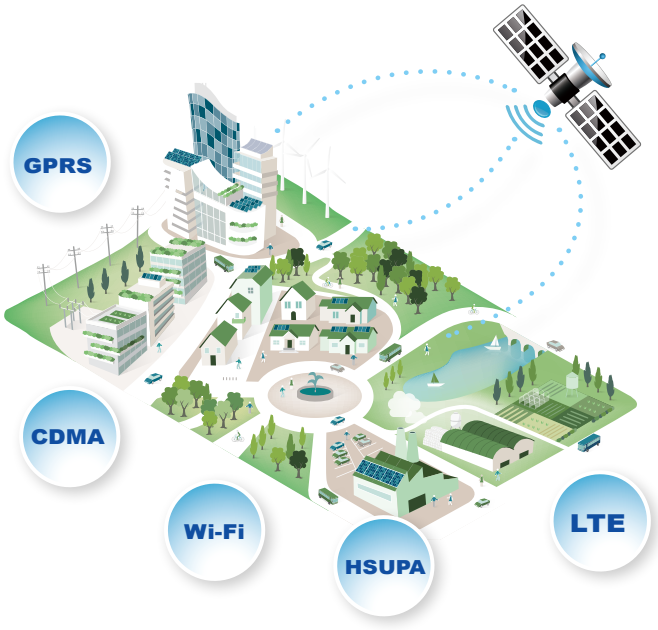

In-Vehicle: IVS Series

The IVS series vehicle box PC is designed with reliable performance for harsh environments. Rich I/O ports are provided to connect with multiple peripheral devices in vehicle for different applications.

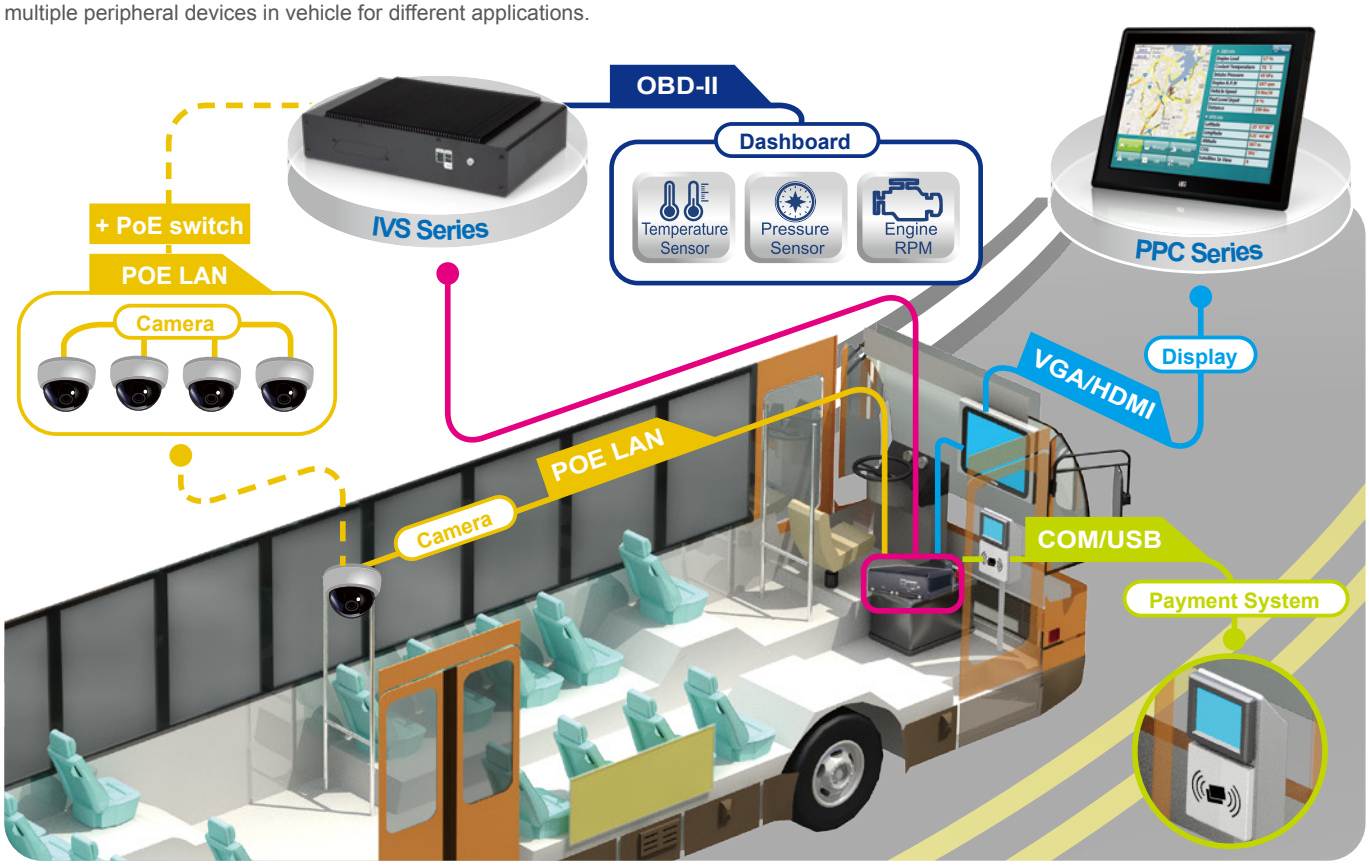

Key Features

■ Wide Range Temperature

Operating Temperature

IEI fanless product series has leading-edge thermal design and has been tested under extreme temperature conditions in order to ensure that IEI fanless products can work in any harsh environment.

■ E-mark Certification

E-Mark

All vehicles, vehicle parts, and electronic products for the car must be enforced EMC testing. All of IEI IVS and in-vehicle panel PC series products have passed E-Mark certification which are required for the European market.

■ Vibration and Shock Resistance

MIL-STD 810F COMPLIANT

In-vehicle systems must be able to withstand the shock and vibration that comes with driving a vehicle. IEI transportation series meets the requirement for different environments and has passed particular verification dependent on MIL-STD-810G 514.5 standard, EN61373 for railway market, EN60721 for in-vehicle market.



■ Particular Power Solution

Power Management

We design wide power input to prevent surge when starting engine. We develop power management for users. For in-vehicle market, we design wide DC input and ACC power to ensure users can operate the system well.

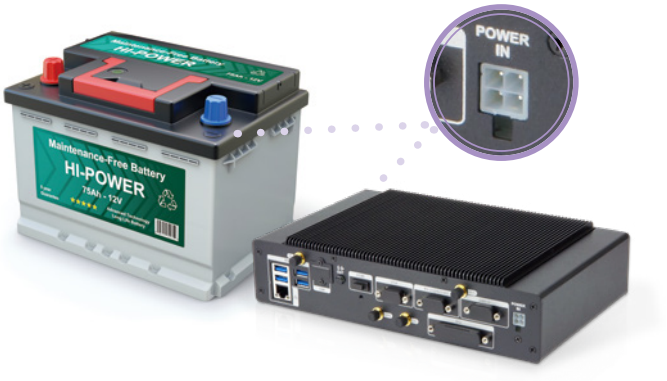

Railway: IRS Series

IEI's Railway System (IRS) is focused on the rolling stock market with a variety of advanced technologies designed. The IRS-100 series is compliant with EN 50155 standard. The IRS-100 provides multiple storage bays for data saving, lockable connectors, GPS function and Wi-Fi for wireless communication. Users can control passenger information system (PIS) and network video recorder (NVR) through the IRS-100. The popular IP cameras for surveillance application can also be implemented to provide real time video monitoring to ensure passengers' safety.



Key Features

■ Dual SIM Slot

The IRS-100 offers dual SIM slot with the ability to automatically switch between two different networks in order to maintain seamless connectivity in remote areas. The system supports GPRS/ UMTS/HSDPA/LTE technologies for transmission.

Front View



■ Lockable M12 Connectors

To against vibration and shock, the M12 connector is used for dual LAN communication which offers a reliable performance for high-quality data acquisition or transmission. The M12 connector can ensure that all cables can be tightly secured and improve anti-vibration capability.

Rear View



■ Multiple Isolated Port Protection

The IRS-100 provides 1.5kV isolation on the RS-232/422/485, DIO and power in order to protect from any stray electrical signals from other devices and to ensure stable operation in harsh environments.

■ Operating Temperature and EN 50155 Compliance

EN50155 is the standard for electronic equipment used on rolling stock. IEI's railway system (IRS-100) complies with EN50155 TX column 2 standard and passed tests for vibration, shock, and wide temperature. IRS-100 can run in an extremely hot or cold environment in -40°C ~ 70°C.

Standard	EN50155 T1	EN50155 T2	EN50155 T3	EN50155 TX
Internal Cabinet Temperature Range	-25°C - +55°C	-40°C - +55°C	-25°C - +70°C	-40°C - +70°C

■ Wide Range of DC/DC Converters

Railway rolling stock is required to meet the requirement of EN50155 for electronic equipment.
IRS-100 has wide range of input voltages of 24VDC~110VDC (±40%), therefore, uses are able to install various devices in different railway rolling stock applications.

Nominal Input	24V	37.5V	48V	72V	96V	110V
Input Range (0.7-1.25 Vin)	17-30V	26-47V	34-60V	50-90V	67-120V	77-137V
Brownout 100ms (0.6xVin)	14V	22V	29V	43V	58V	66V
Transient 1s (1.4xVin)	34V	61V	67V	101V	135V	154V

■ Compliant with Electromagnetic Interference Requirements

Railway electronic systems are subjected to different level of electromagnetic interference requirements.

Standard	Parameter		EN50155	
Rolling Equipment	Vibration	Category < 0.3 kg	Shock (half sine)	Long. / Trans. / Vert. axis
	Frequency range	5 - 150 Hz	Peak acceleration	5 g / 2 g / 1 g
	Acceleration	5 g	Duration	50 ms / 20 ms / 20 ms

■ Compliant with Mechanical Requirements

Railway electronic systems are subjected to high-level mechanical environmental constraints depending on their implementation.

	Generic Standards	EN 50121-3 and -4	EN 50155
Radio electrical conducted emission <30MHz 0, 15 - 0, 5 MHz (quasi peak) 0, 5 - 5 MHz (quasi peak) 5 - 30 MHz (quasi peak)	EN55032 EN55011	EN55011 level +20 dB : 79 dB/µV/m+20dB (quasi peak) 73 dB/µV/m+20dB (quasi peak) 73 dB/µV/m+20dB (quasi peak)	Level: 70 dB/µV/ qp 70 dB/µV/ qp 70 dB/µV/ qp
Radio magnetic emission qp at 10m >30MHz 30 - 80 MHz 80 - 230 MHz 230 - 1, 000 MHz	EN55032 EN55011	EN55011 level class B : 40 dB/µV/m (quasi peak) 40 dB/µV/m (quasi peak) 47 dB/µV/m (quasi peak)	Level: 70 dB/µV/m < 70 dB/µV/m < 70 dB/µV/m
Electrostatic discharge immunity (Internal)	EN61000-4-2 or IEC-801-2	Level: 6KV contact cond. B Level: 8KV air cond. B	
Radio frequency electromagnetic fields immunity (80 - 1, 000 MHz)	EN61000-4-3 or IEC-801-3 EN50140	Level: 10V/m condition A Level: 20V/m condition A	Level: 10V/m Level: 20V/m
Fast transient/burst immunity (DC power port and I/O ports)	EN61000-4-4 or IEC-801-4	Level: 0.5KV condition A Level: 2KV condition A	Level: 2KV
Surge immunity	EN61000-4-5 or IEC-801-5	Level: 2KV condition B Impedance 42 Ohm	Level: 1.8 KV
Conducted distustances induced by radio frequency fields immunity (150KHz-80MHz) (DC power port and I/O port)	EN50141 or EN61000-4-6 or EN50121-4	Level: 3V condition A Modulation 80% AM Impedance 150 0hm Level: 10V condition A	
Damped oscillatcry magentic field immunity	EN61000-4-10	Level: 30A/m condition B	

Marine: SBOX Series

It is difficult to send out technical support for maritime field application due to the location limitation. The best way to solve the urgent issue is remote troubleshooting with IEI iRIS solution. IEI marine-grade solutions provide the most convinent method of real-time system alert notice and repair function through iRIS solution to make customer's equipment more reliable and durable in critical environment.



Key Features

■ 3 independent displays: HDMI, DVI, and VGA

The three simultaneously independent displays are supported via the on-board video output combinations of VGA, DVI and HDMI. This versatile combination of display output options makes the marine system ideal for multi-monitor required applications in the bridge room.

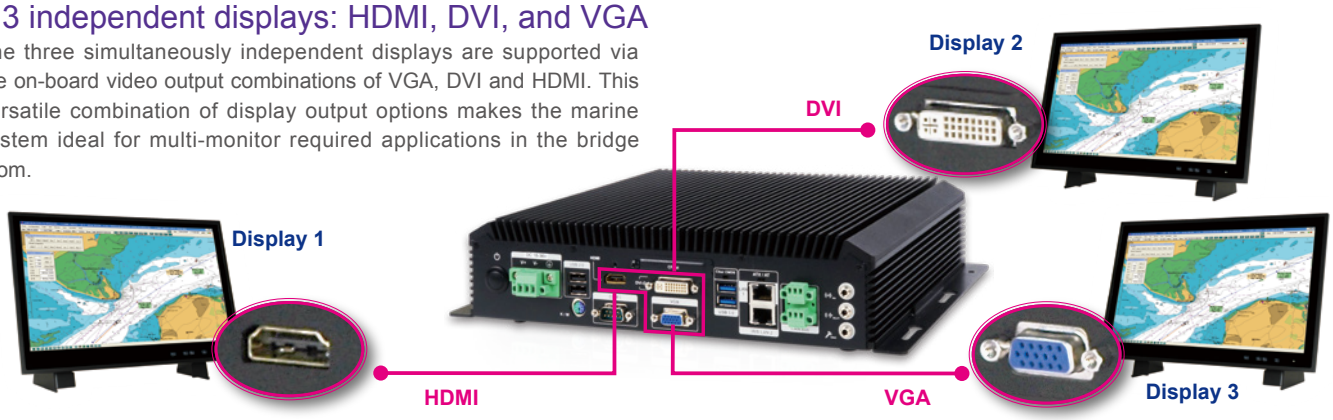

■ Multiple Isolated Ports for Comprehensive Protection against Electrical Surges

Ground loop and electric surges are common in the marine applications of electronic products due to the dense placement of devices. These stray electrical signals can cause equipment damage or malfunction.

■ 2.5 kV isolation protection on the RS-232/422/485

IEI marine computer is protected from any stray electrical signals from other devices on the ship. Electric surges that were generated from other electronic devices which often passed through serial lines to the marine computer can cause severe damage and malfunction to the computers.



■ Two independent CAN 2.0B channels with 2.5 kV isolation protection

CAN 2.0B is a kind of marine electronic data network for communication between marine electronic devices such as chart plotters, navigation instruments, GPS receivers, etc.

■ Isolated 18 V~24 V DC power 2250 V DC Input to Output Basic Insulation



DNV Compliance

The DNV regulation is one of the most stringent standards in the maritime industry. It sets the minimum requirements of devices based on where the device is located. IEI marine series complies with DNV regulations and has passed tests for temperature, humidity, vibration, EMC and water- and dust-proof levels.

■ Operating Temperature

The marine series can run in wide temperature environment from -15°C to 55°C.

Temperature	Class A	Class B	Class C	Class D
Location	Machinery spaces, control rooms, accommodation, bridge	Inside cubicles, desks, etc. with temperature rise of 5° C or more	Pump rooms, holds, rooms with no heating	Open deck, masts
Minimum equipment specification	Ambient temperatures: +5°C to +55°C	Ambient temperatures: +5° C to +70°C	Ambient temperatures: -25°C to +55°C	Ambient temperatures: -25°C to +70°C

■ Humidity

The marine series conforms to DNV class A of humidity.

Humidity	Class A	Class B
Location	Locations where special pre-cautions are taken to avoid condensation	All other locations
Minimum equipment specification	Relative humidity up to 96 % at all relevant temperatures.	Relative humidity up to 100 % at all relevant temperatures

■ Vibration

The marine series is subjected to DNV Class A vibration test and can be widely used on bulkheads, beams, deck and bridge.

Vibration	Class A	Class B	Class C
Location	On bulkheads, beams, deck, bridge	On machinery such as internal combustion engines, com-pressors, pumps, including piping on such machinery	Masts
Minimum equipment specification	Frequency range: 3-13.2 Hz, Amplitude: 1.0 mm (peak value) Frequency range: 13.2-100 Hz, Acceleration amplitude: 0.7 g	Frequency range: 3-25 Hz, Amplitude: 1.6 mm (peak value) Frequency range: 25-100 Hz, acceleration amplitude: 4.0 g	Frequency range: 3-13.2 Hz, Amplitude: 3.0 mm (peak value) Frequency range: 13.2-50 Hz, Acceleration amplitude: 2.1 g

■ EMC

Being different to CE and FCC standards, DNV regulations especially emphasize the importance of electromagnetic compatibility. IEI marine series is compliant with strict class B level and can provide a safe operating environment of sailing period.

Vibration	Class B			
Location	All locations including bridge and open deck			
Minimum equipment specification	**Immunity**			
	Conducted Low Frequency (Test 3.14.4)		Electrical Fast Transient/Burst (Test 3.14.5)	Electrical Slow Transient Surge (Test 3.14.6)
	AC 50/60 Hz Supply Voltage up to 15th harmonics: 10% of UN **15th to 100th harmonics:** decreasing from 10% to 1% of UN **100th to 200th:** harmonics 1% of UN	**DC Supply Voltage Frequency Sweep Range:** 50 Hz to 10 kHz **Signal Level:** 3 V r.m.s. max 2W	Amplitude : 2 kV line on power supply port/earth; 1 kV on I/O data control and communication ports(coupling clamp)	Amplitude: 0.5 kV, differential mode 1 kV, common mode
	Conducted Radio Frequency (Test 3.14.7 – Table 3.20/3.21)		Radiated Electromagnetic Field (Test 3.14.8)	Electrostatic Discharge (Test 3.14.9)
	Frequency range:150 kHz - 80 MHz Voltage level (e.m.f.): 3 V r.m.s. Spot frequencies: 2/3/4/6.2/8.2/12.6/16.5/18.8/22/25 MHz. Voltage level (e.m.f.) :10 V r.m.s.		Frequency range: 80 MHz to 2 GHz Electric field strength: 10 V/m	Output voltage Air: 8 kV Contact: 6 kV
	Emission			
	Radiated (Test 3.14.10 - 11)			
	Enclosure Port	Frequency range	Measuring bandwidth	Limits (quasi-peak)
	EMC B All locations including bridge and open deck	0.15-0.3 MHz	9 kHz	80 - 52 dBµV/m
		0.30-30 MHz	9 kHz	52 - 34 dBµV/m
		30-2000 MHz	120 kHz	54 dBµV/m
		Except: 156-165 MHz	9 kHz	24 dBµV/m
	Conducted (Test 3.14.10 - 12)			
	Power Port	Frequency range	Measuring bandwidth	Limits (quasi-peak)
	EMC B All locations including bridge and open deck	10-150 kHz	200 Hz	96 – 50 dBµV
		150-350 kHz	9 kHz	60 – 50 dBµV
		0.35 - 30 MHz	9 kHz	50 dBµV

■ Enclosure

The marine series is compliant with high waterproof and dustproof level. The front bezel complies with IP66 rating and the rear side complies with IP22.

Enclosure	Class A	Class B	Class C	Class D
Location	Control rooms, accommodation, bridge	Engine room	Open deck, masts, below floor plates in engine room	Submerged application, bilges
Minimum equipment specification	IP22	IP44	IP56	IP68

E-Window Tool Kit



Innovative E-windows technology is a new modular way of adding flexible functionality to a wide range of device. Using standardized component helps system integrators easily add more features without any costly efforts.

E-Window

Features

- Easy maintenance
- Various module & I/O plate with flexible customization
- Integration of multiple functions
- Easy for replacement with different modules

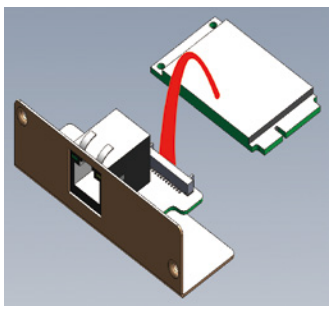

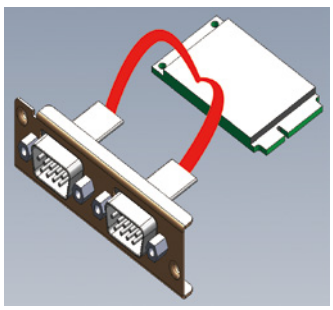

E-Window I/O Plate with PCIe Mini Card
An E-Window module uses a PCIe Mini slot embedded on the motherboard.

Supported Model

Transportation System	
IVS-110-AL	
Industrial Automation System	
TANK-871-Q170	TANK-870e-H110

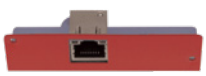

E-MPCIE-LAN-R10

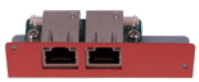

E-MPCIE-DLAN-R10

Ordering Information

Part No.	Description
E-MPCIE-DLAN-R10	PCIe Mini card supports 2-port GbE with Intel I211 controller, with PMS 194C I/O bracket and 250mm cable
E-MPCIE-LAN-R10	PCIe Mini card supports 1-port GbE with Realtek RTL8111E controller, with PMS 194C I/O bracket and 250mm cable
E-MPCIE-UART-KIT01-R10	PCI Express Mini supports quad RS-232/422/485 port module
E-MPCIE-CAN-R10	PCI Express Mini Dual CAN Bus module, Full size, RoHs

Transportation System







Model Name		IKARPC-07A-BT	AFOKAR-08A-RK39	IKARPC-W10A-BT
Chassis	Color	Black C + Silver	Black C + Silver	Blue C + Black C
	Dimensions (WxDxH) (mm)	210 x 154 x 28	210 x 154 x 33.9	277 x 186 x 27
	System Fan	Fanless		
	Chassis Construction	PC + ABS plastic	PC + ABS plastic front, metal rear	PC + ABS plastic
Display	Size	7"	8"	10.1"
	Resolution	1024 × 3 (RGB) × 600	800(RGB) × 1280	1280 x 800
	Brightness (cd/m²)	500	500	350
	Contrast Ratio	700:1	800 : 1	800:1
	Pixel Pitch (mm)	0.05 (W) × 0.15 (H)	0.13455(H) × 0.13455(V)	0.0565 (W) × 0.1695 (H)
	Viewing Angle (H/V)	130° (H) / 140° (V)	85/85/85/85 Deg.	150° (H)/145° (V)
	Touchscreen	Projected capacitive touch with USB interface	Projected capacitive with AG coating	Projected capacitive with AG coating
Motherboard	CPU	Intel® Atom™ processor E3826 (dual-core, 1.46 GHz, 7W)	Rockchip RK3399 (Dual-core Cortex-A72 up to 1.8GHz + Quad-core Cortex-A53 up to 1.5GHz)	Intel® Atom™ processor E3826 (dual-core, 1.46 GHz, 7W)
	Chipset	SoC		
	System Memory	On-board 2 GB SDRAM	On-board 2GB LPDDR3-1866	On-board 2 GB DDR3L
Storage	Hard Drive	N/A	N/A	1 x 2.5" SATA 3Gb/s HDD/SSD drive bay
	SD card	1 x microSD slot (supports SD 2.0, max. 32 GB)	1 x microSD slot	1 x SD slot (supports SD 2.0, max. 32 GB)
	Flash	N/A	On-board 16GB eMMC NAND FLASH	N/A
	mSATA	1 x mSATA (SATA 3Gb/s) optional	N/A	N/A
Communication	WLAN	PCIe Mini Wi-Fi 802.11a/b/g/n/ac (optional)	On-board 802.11 a/b/g/n/ac	PCIe Mini Wi-Fi 802.11a/b/g/n/ac (optional)
	Bluetooth	BT 4.0/3.0+HS (combo with Optional WLAN module)	Bluetooth V4.1	BT 4.0/3.0+HS (combo with Optional WLAN module)
	WWAN	PCIe Mini WCDMA/HSDPA/HSUPA (optional)	PCIe Mini LTE (optional)	PCIe Mini WCDMA/HSDPA/HSUPA (optional)
	RFID	N/A	13.56 MHz ISO4443 A/B, read-write capable, ISO 14443A (MIFARE), ISO 14443B (FeliCa)	N/A
	GPS	On-board GPS		
I/O Interfaces	20-pin Connector	1 x GbE LAN, 1 x OBD-II/J1939, 1 x USB 2.0	1 x OBD-II 1 x USB 2.0	N/A
	24-pin Connector	1 x Audio line-out(R+L) 1 x Audio line-in 1 x RS-232 4-bit digital I/O (2-bit input, 2-bit output)	1 x Audio out 1 x RS-232 1 x RS-485 4-bit digital I/O with isolation (2-bit input, 2-bit output)	N/A
	USB 3.2 Gen 1	1		
	USB 2.0	1	20-pin connector	1
	Ethernet	N/A	N/A	1 x RJ-45 PCIe GbE by Realtek 8111E
	COM Port	N/A	24-pin connector	2 x DB-9 RS-232
	Digital I/O	N/A	24-pin connector	8-bit digital I/O (4-bit input, 4-bit output)
	CAN-Bus/OBD-II	N/A	20-pin connector	1 x DB-9 OBD-II
	Display	1 x HDMI		
	SIM	2 x On-board SIM card slot	1 x On-board SIM card slot	2 x On-board SIM card slot
	Antenna	1 x GPS, 1 x WWAN		
Expansions	PCIe Mini	1 x Full-size (reserved for mSATA module), 1 x Full-size (reserved for WWAN module), 1 x Half-size (reserved for WLAN module)	1 x Full-size (reserved for WWAN)	1 x Full-size (reserved for WWAN module), 1 x Full-size (reserved for WLAN module)
Multimedia	Speaker	1 x Speaker (2 W)		
	Camera	2-megapixel CMOS	5-megapixel CMOS	2-megapixel CMOS
Power	Power Input	Cigarette lighter power cable, DC 9 V~30 V		
	Power Consumption	12V @ 1.25 A	12V @ 1.2A	12 V @ 1.73 A
Reliability	Mounting	VESA 75	VESA 75	VESA 100
	Operating Temperature	-10°C ~ 60°C with air flow	-10°C ~ 50°C with air flow	-10°C ~ 60°C with air flow
	Weight (Net/Gross)	0.9 kg/2.1 kg	0.77 kg	1.3 kg/2.8 kg
	Safety/EMC	CE/FCC/E-Mark/IP 54 compliant front panel	CE/FCC (Class A)/E-mark/IP54 front panel compliant	CE/FCC/E-Mark/IP 64 compliant front panel
OS	Supported OS	Microsoft® Windows Embedded 8, Microsoft® Windows Embedded Standard 7 E	Android 7.1	Microsoft® Windows Embedded 8, Microsoft® Windows Embedded Standard 7 E

Transportation System





Model Name		IVS-200-ULT2	IVS-110-AL
Chassis	Color	Blue C	Black
	Dimensions (WxDxH) (mm)	290 x 225 x 69	261 x 170 x 60
	System Fan	Fanless	Fanless
	Chassis Construction	Extruded aluminum alloy	Extruded aluminum alloy
Motherboard	CPU	Intel® Core™ i5-5350U 1.8 GHz (up to 2.9 GHz, dual-core, TDP 15W) Intel® Celeron® 3765U 1.9 GHz (dual-core, TDP 15W)	Intel® Atom™ x7-E3950 1.6 GHz (up to 2.0 GHz, quad-core, TDP 12W)
	Chipset	SoC	SoC
	System Memory	2 x SO-DIMM DDR3L 1600/1866 (4GB pre-installed)(up to 16GB)	1 x SO-DIMM DDR3L 1600/1866 (4GB pre-installed)(up to 8GB)
Storage	Hard Drive	1 x 2.5" SATA 6Gb/s HDD/SSD removable bay	1 x 2.5" SATA 6Gb/s HDD/SSD bay
	eMMC	N/A	1 x eMMC5.0 (optional)
Communication	WLAN	802.11 a/b/g/n/ac (optional)	802.11 a/b/g/n/ac (optional)
	Bluetooth	Bluetooth 2.1 (optional)	BT 4.0/3.0+HS (optional)
	WWAN	WCDMA/HSDPA/HSUPA (optional)	WCDMA/HSDPA/HSUPA (optional)
	GPS	N/A	On-board GPS
I/O Interfaces	USB	2 x USB 3.2 Gen1 2 x USB 2.0	4 x USB 3.2 Gen1
	Ethernet	4 x RJ-45: 1 x GbE by Intel® I218 3 x GbE by Intel® I211	1 x RJ-45: 1 x GbE by Intel® I210
	COM Port	2 x RS232/422/485 with AFC (DB9) 4 x RS232 (DB9)	1 x RS232/422/485 with AFC (DB9)
	Digital I/O	8-bit Digital I/O (4-in/ 4-out)(pin header)	16-bit Digital I/O (8-in/ 8-out)
	OBD-II	N/A	1 x OBD-II/J1939 (DB9)
	Display	1 x HDMI (up to 3840 x 2160@30Hz) 1 x VGA (up to 1920 x 1600@60Hz)	1 x HDMI (up to 3840 x 2160@30Hz) 1 x VGA (up to 1920 x 1600@60Hz)
	Audio	1 x Line-out, 1 x Mic-in	1 x Line-out
	Antenna	1 x 3G, 1 x BT, 1 x Wi-Fi	1 x 3G, 1 x GPS, 1 x BT, 1 x Wi-Fi
	Other	1 x Power button, 1 x Reset button, 1 x AT/ATX Switch, 1 x ACC Switch, 1 x LED for Power (Red), 1 x LED for Storage (Green)	1 x Power Button, 1 x LED for HDD, 1 x LED for Wi-Fi, 2 x LED for SIM
Expansions	PCIe Mini	1 x Full-size with SIM card slot (PCIe/USB2.0) 1 x Full-size (PCIe/USB 2.0/SATA)	1 x Full/Half-size with SIM card slot (PCIe/USB 2.0) 1 x Full/Half-size with SIM card slot (PCIe/USB 2.0) 1 x Half-size (PCIe/USB 2.0)
Power	Power Input	DC Jack: 9 ~ 36V DC	Cigarette lighter power cable: 9 ~ 36V DC
	Power Consumption	12V @ 2.1A (Intel® i5-5350U with 4GB memory)	12V @ 5A (Intel® x7-E3950 with 8GB memory)
Reliability	Mounting	VESA 100	Wall-mount/ VESA 100
	Operating Temperature	-20 ~ 60°C with air flow, 10% ~ 95% non-condensing	-30 ~ 70°C with air flow (SSD), 10% ~ 95% non-condensing
	Storage Temperature	-40 ~ 80°C with air flow, 10% ~ 95% non-condensing	-40 ~ 80°C with air flow (SSD), 10% ~ 95% non-condensing
	Operating Shock	Half-sine wave shock 5G, 11ms, 100 shocks per axis (SSD)	Half-sine wave shock 5G, 11ms, 100 shocks per axis (SSD)
	Operating Vibration	MIL-STD-810G 514.6C-1 (SSD)	MIL-STD-810F 514.5C-2 (SSD)
	Weight (Net/ Gross)	1.3KG/ 1.45KG	2.4KG/ 3.8KG
	Safety/EMC	CE/ FCC/ E-Mark	CE/ FCC/ E-Mark
	IP Rating	N/A	IP 4X compliant
	Watchdog Timer	Programmable 1 ~ 255 sec/min	Programmable 1 ~ 255 sec/min
OS	Supported OS	Microsoft® Windows Embedded 8, Microsoft® Windows Embedded Standard 7 E	Microsoft® Windows 10

Transportation System





Model Name		IRS-100-ULT3	SBX-100-QM87
Chassis	Color	Blue C	Black
	Dimensions (WxDxH) (mm)	290 x 225 x 69	290 x 225 x 75
	System Fan	Fanless	Fanless
	Chassis Construction	Extruded aluminum alloy	Extruded aluminum alloy
Motherboard	CPU	Intel® Core™ i5-6300U 2.4 GHz (up to 3.0 GHz, dual-core, TDP 15W)	Intel® Core™ i5-4400E 2.7 GHz (up to 3.3 GHz, dual-core, TDP 37W)
	Chipset	SoC	Intel® QM87
	System Memory	2 x SO-DIMM DDR4 2400 (4GB pre-installed)(up to 32GB)	2 x SO-DIMM DDR3 1333/1600 (4GB pre-installed)(up to 16GB)
IPMI	iRIS Solution	N/A	1 x iRIS 2400
Storage	Hard Drive	2 x 2.5" SATA 6Gb/s HDD/SSD removable bay	2 x 2.5" SATA 6Gb/s SSD bay with RAID 0/1
	C-Fast	1 x C-Fast card slot	1 x C-Fast card slot
I/O Interfaces	USB	2 x USB 3.2 Gen1 1 x USB 2.0 (M12)	2 x USB 3.2 Gen1 2 x USB 2.0
	Ethernet	2 x M12: 2 x GbE by Intel® I211	2 x RJ-45: 1 x GbE by Intel® I217 (with 2kV isolation) 1 x GbE by Intel® I211 (with 2kV isolation)
	COM Port	2 x RS232/422/485 with AFC (DB9 with 1.5kV isolation)	1 x Console (DB9) 4 x RS232/422/485 with AFC (DB9 with 2.5kV isolation)
	Digital I/O	8-bit Digital I/O (4-in/ 4-out)(with 1.5kV isolation)	N/A
	CAN-bus	N/A	2 x CAN-bus 2.0b (with 2.5kV isolation)
	Display	1 x VGA (up to 1920 x 1200@60Hz) 1 x DVI-D (up to 1920 x 1200@60Hz)	1 x VGA (up to 1920 x 1200@60Hz) 1 x DVI-D (up to 2500 x 1600@60Hz) 1 x HDMI (up to 2500 x 1600@60Hz)
	Audio	1 x Line-out, 1 x Mic-in	1 x Line-out, 1 x Line-in, 1 x Mic-in
	Wireless	1 x 802.11a/b/g/n/ac (optional)	1 x 802.11a/b/g/n/ac (optional)
	PS2 (KB/MS)	N/A	1 x
	Other	1 x Power Button, 1 x Reset Button, 1 x AT/ATX Switch, 2 x LED for HDD, 2 x LED for LAN, 2 x LED for SIM	1 x Power Button, 1 x Reset Button, 1 x AT/ATX Switch, 1 x LED for Power (Green), 1 x LED for HDD (Red), 1 x LED for IPMI (Yellow)
Expansions	PCIe Mini	1 x Full-size with SIM card slot (PCIe/USB 2.0) 1 x Full-size with SIM card slot (PCIe/USB 2.0/SATA)	2 x Full-size (PCIe/USB 2.0)
Power	Power Input	M12: 24/ 110V DC	Terminal block: isolated 24V DC (18 ~ 31.2V DC)
	Power Consumption	24V @ 2A (Intel® i5-6300U with 4GB memory)	100W (Intel® i5-4400E with 4GB memory)
Reliability	Mounting	Wall mount	Wall mount
	Operating Temperature	-40 ~ 70°C with air flow (SSD), 10% ~ 95% non-condensing	-15 ~ 55°C with air flow (SSD), 10% ~ 95% non-condensing
	Storage Temperature	-40 ~ 85°C with air flow (SSD), 10% ~ 95% non-condensing	-20 ~ 60°C with air flow (SSD), 10% ~ 95% non-condensing
	Operating Shock	Compliant with EN 61373 Category 1 Class B	IEC 60945 and DNV 2.4 IASC-E10 compliant
	Operating Vibration	Compliant with EN 61373 Category 1 Class B	IEC 60945 and DNV 2.4 IASC-E10 compliant
	Weight (Net/ Gross)	3.9KG/ 5.1KG	4.08KG/ 6.03KG
	Safety/EMC	CE/ FCC/ Compliance with EN50155, EN50121	CE/ FCC/ DNV GL CG-0339, IEC 60945 4th, IACS-E10, IEC 61174 compliant
	IP Rating	N/A	IP22 compliant rear cover
	Watchdog Timer	Programmable 1 ~ 255 sec/min	Programmable 1 ~ 255 sec/min
OS	Supported OS	Microsoft® Windows® Embedded 8, Microsoft® Windows® Embedded Standard 7 E	Microsoft® Windows® Embedded 8, Microsoft® Windows® Embedded Standard 7 E

IKARPC-07A

Vehicle Computer Series

Features

- 7” sunlight readable TFT LCD with projected capacitive touchscreen
- Optional HSUPA/GPRS/GSM, Wi-Fi and Bluetooth
- Built-in GPS receiver
- Built-in OBD-II/J1939





Specifications

Model Name		IKARPC-07A-BT
Chassis	Color	Black C + Silver
	Dimensions (WxHxD) (mm)	210 x 154 x 28
	System Fan	Fanless
	Chassis Construction	PC + ABS plastic
Display	Size	7"
	Resolution	1024 × 3 (RGB) × 600
	Brightness (cd/m²)	500
	Contrast Ratio	700:1
	Pixel Pitch (mm)	0.05 (W) × 0.15 (H)
	Viewing Angle (H/V)	130° (H) / 140° (V)
	Touchscreen	Projected capacitive touch with USB interface
Motherboard	CPU	Intel® Atom™ processor E3826 (dual-core, 1.46 GHz, 7W)
	Chipset	SoC
	System Memory	On-board 2 GB SDRAM
Storage	SD Card	1 x Micro SD slot (supports SD 2.0, max. 32 GB)
	Flash	N/A
	mSATA	1 x mSATA (SATA 3Gb/s) optional
Communication	WLAN	PCIe Mini Wi-Fi 802.11a/b/g/n/ac (optional)
	Bluetooth	BT 4.0/3.0+HS (combo with Optional WLAN module)
	WWAN	PCIe Mini WCDMA/HSDPA/HSUPA (optional)
	RFID	N/A
	GPS	On-board GPS
I/O Interfaces	20-pin Connector	1 x GbE LAN 1 x OBD-II/J1939 1 x USB 2.0
	24-pin Connector	1 x Audio line-out (R+L) 1 x Audio line-in 1 x RS-232 4-bit digital I/O (2-bit input, 2-bit output)
	8-pin Connector	N/A
	USB 3.2 Gen 1	1
	USB 2.0	1
	Display	1 x HDMI
	SIM	2 x On-board SIM card slot
	Antenna	1 x GPS, 1 x WWAN
Expansions	PCIe Mini	1 x Full-size (reserved for mSATA module), 1 x Full-size (reserved for WWAN module), 1 x Half-size (reserved for WLAN module)
Multimedia	Speaker	1 x Speaker (2 W)
	Camera	2-megapixel CMOS
LED Indicator & Button	Indicator	Power/HDD/Wi-Fi/3G
	Button	1 x Power botton
Power	Power Input	Cigarette lighter power cable, DC 9 V~30 V
	Consumption	12V @ 1.25 A
Reliability	Mounting	VESA 75
	Operating Temperature	-10°C ~ 60°C with air flow
	Storage Temperature	-20°C ~ 60°°C
	Humidity	10% ~ 95%, non-condensing
	Operating Shock	Half-sine wave shock 5G, 11ms, 3 shocks per axis
	Operating Vibration	MIL-STD-810F 514.5C-2 (with SSD)
	Weight (Net/Gross)	0.9 kg/2.1 kg
	Safety/EMC	CE/FCC/E-Mark/IP 54 compliant front panel
OS	Supported OS	Microsoft® Windows® Embedded 8, Microsoft® Windows® Embedded Standard 7 E

Fully Integrated I/O



Dimensions (Unit: mm)

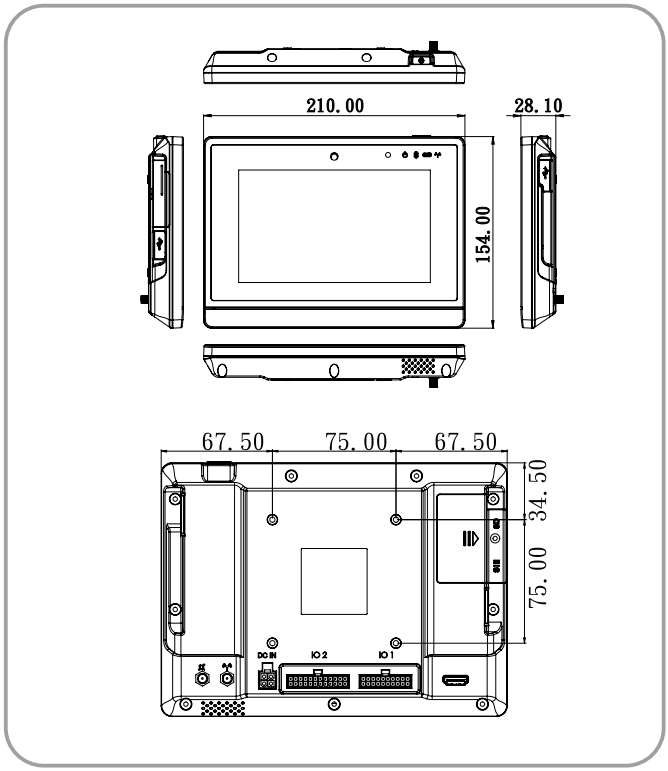

Ordering Information

Part No.	Description
IKARPC-07A-BT-E3/2G-R12	7" 500 cd/m2 1024 x 600 In Vehicle Panel PC with Intel® Atom E3826 1.46GHz, 7W TDP, 2GB DDR3L On-board memory, OBDII, GPS On-board, 2M Camera, R12

Options

Item	Part No.	Description
Power adapter	IVIPOWER-4PIN-R20	Power adapter with 4-pin transfer cable, RoHS
Cigarette lighter power cable	32002-004000-100-RS	Round cable, power cable, car cigarette lighter cable, 2000 mm, 18 AWG, (A) cigarette lighter (5 A 250 V)+ ψ3 green LED, (B) MOLEX 5557-0400 P=4.2, SHANGHAI YING YU, RoHS
OBD-II cable	32025-003400-100-RS	Round cable, OBD-II cable, 2000 mm, 24 AWG, (A) OBD-II 16P male, (B) D-sub 9P female, one piece package with label, NIAN YEONG, RoHS

IKARPC-07A-BT Series

Item	Part No.	Description
I/O connector 1 cable (20-pin)	IVIPOWER-4PIN-R20	Round cable, integration cable, I/O cable, 300 mm, 24 AWG (A)terminal block 3P P=5.08, (B)USB A type female+2 NUT, (C)PCB jack: RJ-45 8P8C, (D)D-sub 9P male, (E)MOLEX 5557-2000 P=3.0, one piece package with label, RoHS
I/O connector 2 cable (24-pin)	32124-003700-100-RS	Round cable, integration cable, I/O cable, 300 mm, 22 AWG, (A)terminal block 8P P=5.08, (B)MOLEX 43025-2400 P=3.0, (C)D-sub 9P male, (D)phone jack 3.5_3P+NUT, (E)phone jack 3.5_5P+NUT, one piece package with label, RoHS
OS: Windows Embedded 7 (DVD-ROM)	IKARPC-07A-BT-WES7P-R10	OS image with Windows® Embedded Standard 7 E for IKARPC-07A-BT Series, DVD-ROM, RoHS
OS: Windows Embedded 8 (DVD-ROM)	IKARPC-07A-WE8S-R10	OS image with Windows® Embedded Standard 8 E for IKARPC-07A-BT Series, WE8S license label, DVD-ROM, RoHS
Wireless kit	IKARPC-WIFI-KIT01-R10	1T1R wifi module kit for embedded system, IEEE 802.11b/g/n, 1 x wifi module, RoHS
WWAN kit	IKARPC-3G-KIT02-R10	F260 3.75G module kit for embedded system, with BT V2.1, RoHs

Packing List

Product	Item	Part No.	Qty	Description
IKARPC-07A-BT	Power cable	32002-001900-100-RS	1	Round cable, power cable, 3000mm, RoHS
	Screw pack	44045-020031-RS	2	Screw pack
	GPS/GSM antenna	32506-000100-100-RS	1	Integration antenna, GPS/GSM, RG 174, 5000mm/5000mm, PPF-5423SA5X-999, Magnetic mount: φ55x22mm, 1575.42MHz/850MHz/900MHz/1800MHz/1900MHz, SMA plug x 2

AFOKAR-08A-RK39

Vehicle Computer Series

Features

- 8” sunlight readable TFT LCD with projected capacitive touchscreen
- Optional LTE module
- Built-in GPS receiver
- Built-in OBD-II
- OS: Android 9





Specifications

Model Name		AFOKAR-08A-RK39
Chassis	Color	Black C + Silver
	Dimensions (WxHxD) (mm)	210 x 154 x 33.9
	System Fan	Fanless
	Chassis Construction	PC + ABS plastic front, Metal rear
Display	Size	8"
	Resolution	800 (RGB) × 1280
	Brightness (cd/m²)	500 cd/m² (typ.)
	Contrast Ratio	800 : 1 (typ.)
	Pixel Pitch (mm)	0.13455 (H) × 0.13455 (V)
	Viewing Angle (H/V)	85/85/85/85 Deg.
	Touchscreen	Projected capacitive with AG coating
Motherboard	CPU	Rockchip RK3399 (Dual-core Cortex-A72 up to 1.8GHz + Quad-core Cortex-A53 up to 1.5GHz)
	System Memory	2GB LPDDR4
Storage	SD Card	1 x Micro SD slot
	Flash	16GB eMMC NAND flash
Communication	WLAN	802.11 a/b/g/n/ac
	Bluetooth	Bluetooth V4.1
	WWAN	PCIe Mini LTE (optional)
	RFID	13.56 MHz ISO4443 A/B, read-write capable, ISO 14443A (MIFARE), ISO 14443B (FeliCa)
	GPS	On-board GPS
I/O Interfaces	20-pin Connector	1 x OBD-II 1 x USB 2.0 2 x CVBS Video input
	24-pin Connector	1 x Audio out 1 x RS-232 1 x RS-485 4-bit digital I/O with isolation (2-bit input, 2-bit output)
	USB 3.2 Gen 1	1 x USB 3.2 Gen 1 Type A
	Display	1 x HDMI output
	SIM	1 x On-board SIM card slot
	Antenna	1 x GPS, 1 x WWAN
Expansions	PCIe Mini	1 x Full-size (reserved for WWAN)
Multimedia	Speaker	1 x Speaker (2 W)
	Camera	5-megapixel CMOS
LED Indicator & Button	Indicator	Power/BT/Wi-Fi/WWAN
	Button	1 x Power button
Power	Power Input	DC 9 V~30 V, 4-pin connector (with ACC ignition)
	Power Consumption	12V @ 1.2A
Reliability	Mounting	VESA mount 75mm x 75mm
	Operating Temperature	-10°C ~ 50°C with air flow
	Storage Temperature	-20°C ~ 60°C
	Humidity	10% ~ 90%, non-condensing
	IP Level	IP54 front panel compliant
	Operating Shock	Half-sine wave shock 5G, 11ms, 3 shocks per axis
	Operating Vibration	MIL-STD-810F 514.5C-2
	Weight (Net)	0.77 kg
	Safety/EMC	CE/FCC (Class A)/E-mark
OS	Supported OS	Android 9
	Watchdog timer	Yes



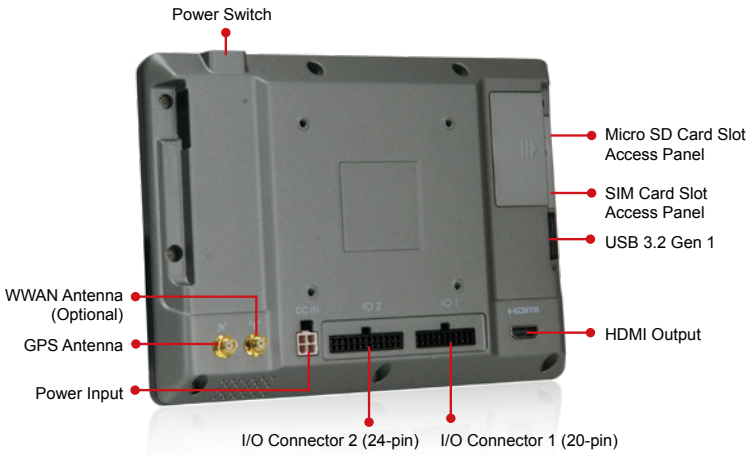

Dimensions *(Unit: mm)*

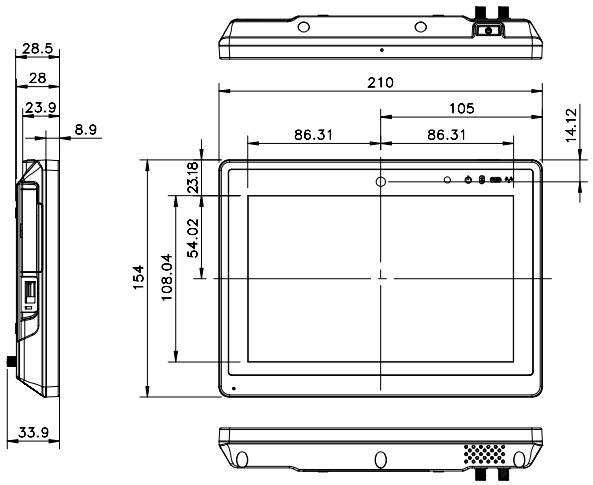

AFOKAR-08A-RK39

Ordering Information

Part No.	Description
AFOKAR-08A-RK39-R20-TW	8” 500 cd/m², Android 9 in- vehicle panel PC with Rockchip 3399 processor, 2GB LPDDR4, 16GB eMMC flash, GPS, Wi-Fi/ Bluetooth, OBD-II, 5-megapixel camera, RFID reader, TW reg, R20
AFOKAR-08A-RK39-R20-CN	8” 500 cd/m², Android 9 in- vehicle panel PC with Rockchip 3399 processor, 2GB LPDDR4, 16GB eMMC flash, GPS, Wi-Fi/ Bluetooth, OBD-II, 5-megapixel camera, RFID reader, CN reg, R20
AFOKAR-08A-RK39-R20-US	8” 500 cd/m², Android 9 in- vehicle panel PC with Rockchip 3399 processor, 2GB LPDDR4, 16GB eMMC flash, GPS, Wi-Fi/ Bluetooth, OBD-II, 5-megapixel camera, RFID reader, US reg, R20
AFOKAR-08A-RK39-R20-EU	8” 500 cd/m², Android 9 in- vehicle panel PC with Rockchip 3399 processor, 2GB LPDDR4, 16GB eMMC flash, GPS, Wi-Fi/ Bluetooth, OBD-II, 5-megapixel camera, RFID reader, EU reg, R20

Options

Item	Part No.	Description
Power Adapter	IVIPOWER-4PIN-R20	Adapter power with 4-pin transfer cable, RoHS
Cigarette Lighter Power Cable	32002-004000-100-RS	Car cigarette lighter cable
VESA Mount Stand	IVI-MK03-R10	138mm 75x75 VESA mount stand
VESA Mount Stand	IVI-MK04-R10	286mm 75x75 VESA mount stand
OBD-II Cable	32025-003400-100-RS	OBDII CABEL;2;2000MM;24AWG;(A)OBD2-16P MALE;(B)D-SUB 9PIN FEMALE
ACC Power Cable	32002-001900-100-RS	Vehicle battery to device power cable;3000MM;16AWG
GPS/LTE Antenna	32506-000500-100-RS	Magnetic Antenna Base_GPS+GLOANSS & 3G/LTE 2 In 1 Antenna;RG 174;5000MM
I/O Connector (20-pin)	32024-003800-100-RS	1 x DB-9 for OBD-II, 1 x USB 2.0 TYPE A, 2 x CVBS Video input
I/O Connector (24-pin)	32124-004400-100-RS	1 x Audio line-out (R+L), 1 x RS-232, 1 x RS-485, 1 x terminal block 4 bit digital I/O
LTE Module	27552-000004-RS	WCDMA/HSPA+/LTE;SIM7500SA
	27552-000005-RS	GSM/LTE/WCDMA;SIM7500E
	27552-000006-RS	LTE/WCDMA;SIM7500A

Packing List

1 x AFOKAR Device

IKARPC-W10A

Vehicle Computer Series

Features

- 10.1" TFT LCD with projected capacitive touchscreen
- Intel® Atom™ E3826 1.46 GHz CPU
- Windows® Embedded Standard 7
- Optional HSUPA/GPRS/GSM, Wi-Fi and Bluetooth
- Built-in GPS function
- Built-in OBD-II





Specifications

Model Name		IKARPC-W10A
Chassis	Color	Blue C + Black C
	Dimensions (WxHxD) (mm)	277 x 186 x 27
	System Fan	Fanless
	Chassis Construction	PC + ABS plastic
Display	Size	10.1"
	Resolution	1280 x 800
	Brightness (cd/m²)	350
	Contrast Ratio	800:1
	Pixel Pitch (mm)	0.0565 (W) × 0.1695 (H)
	Viewing Angle (H/V)	150° (H)/145° (V)
	Touchscreen	Projected capacitive touch with USB interface, AG coating, anti-UV protection
Motherboard	CPU	Intel® Atom™ processor E3826 (dual-core, 1.46 GHz, 7W)
	Chipset	SoC
	System Memory	1 x 204-pin DDR3L SO-DIMM (pre-installed 2GB DDR3L, system max. 4GB)
Storage	Hard Drive	1 x 2.5" SATA 3Gb/s HDD/SSD drive bay
	SD Card	1 x SD slot (supports SD 2.0, max. 32 GB)
Communication	WLAN	PCIe Mini Wi-Fi 802.11a/b/g/n/ac (optional)
	Bluetooth	BT 4.0/3.0+HS (combo with optional WLAN module)
	WWAN	PCIe Mini WCDMA/HSDPA/HSUPA (optional)
	GPS	On-board GPS
I/O Interfaces	USB 3.2 Gen 1	1
	USB 2.0	1
	Ethernet	1 x RJ-45 PCIe GbE by Realtek 8111E
	COM Port	2 x DB-9 RS-232
	Digital I/O	8-bit digital I/O (4-bit input / 4-bit output)
	CAN-bus/OBD-II	1 x DB9 OBD-II
	Display	1 x HDMI
	Resolution	HDMI: Up to 1920 x 1080 @ 60 Hz
	Audio	1 x Line out, 1 x Mic in
	SIM	2 x On-board SIM card slot
	Antenna	1 x GPS, 1 x WWAN
Expansions	PCIe Mini	1 x Full-size (reserved for WWAN module), 1 x Full-size (reserved for WLAN module)
Multimedia	Audio	1 x Speaker (2 W)
	Camera	2-megapixel CMOS
LED Indicator & Button	Indicator	Power/Wi-Fi/HDD/3.5G
	Button	1 x Power button
Power	Power Input	Cigarette lighter power cable, DC 9 V~30 V
	Consumption	12 V @ 1.73 A
Reliability	Mounting	VESA 100
	Operating Temperature	-10°C ~ 60°C with air flow
	Storage Temperature	-20°C ~ 70°C
	Humidity	10% ~ 95%, non-condensing
	Operating Shock	Half-sine wave shock 5G, 11ms, 3 shocks per axis
	Operating Vibration	MIL-STD-810F 514.5C-2 (with SSD)
	Weight (Net/Gross)	1.3 kg/2.8 kg
	Safety/EMC	CE/FCC/E-Mark/IP 64 compliant front panel
OS	Supported OS	Microsoft® Windows® Embedded 8, Microsoft® Windows® Embedded Standard 7 E

Fully Integrated I/O

Rear view

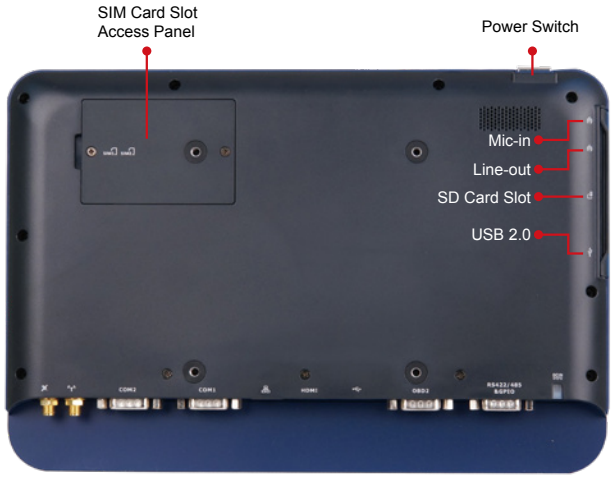

Bottom view

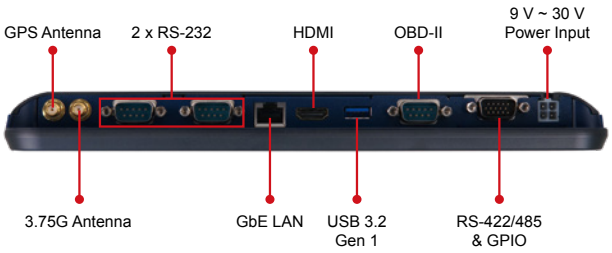

Dimensions (Unit: mm)

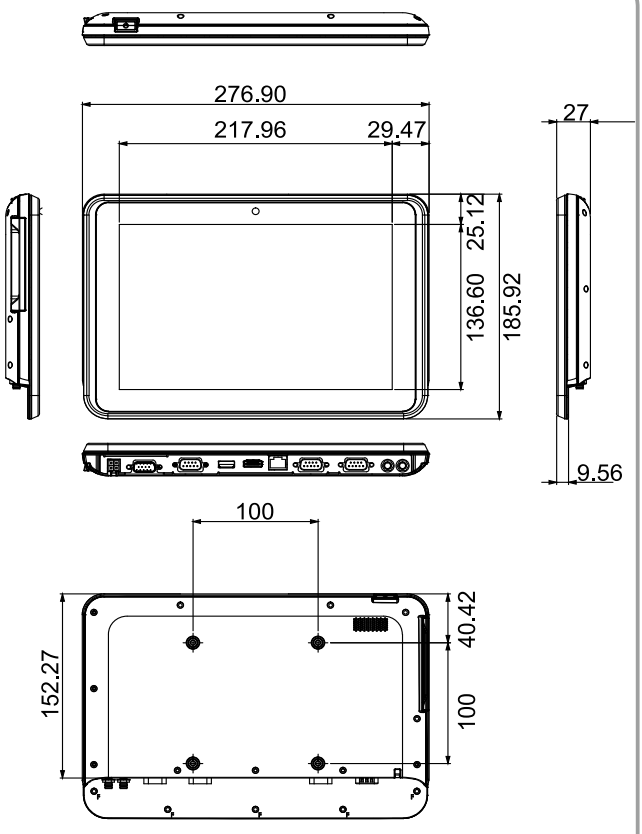

IKARPC-W10A

Ordering Information

Part No.	Description
IKARPC-W10A-BT-E3/2G-R11	10.1" 350 cd/m2 1280 x 800, in-vehicle panel PC with Intel® Atom E3826 1.46GHz, 7W TDP, 2GB DDR3L on-board memory, OBD-II, on-board GPS, 2-megapixel camera, R11

Options

Item	Part No.	Description
Power adapter	IVIPOWER-4PIN-R20	Power adapter with 4-pin transfer cable, RoHS
Cigarette lighter power cable	32002-004000-100-RS	Round cable, power cable, car cigarette lighter cable, 2000 mm, 18 AWG, (A) cigarette lighter (5 A 250 V)+ ψ3 green LED, (B) MOLEX 5557-0400 P=4.2, RoHS
OBD-II cable	32025-003400-100-RS	Round cable, OBD-II cable, 2000 mm, 24 AWG, (A) OBD-II 16P male, (B) D-sub 9P female, one piece package with label, RoHS
OS: Windows Embedded 7 (DVD-ROM)	IKARPC-W10A-BT-WES7P-R10	OS image with Windows® Embedded Standard 7 E for IKARPC-W10A-BT Series, DVD-ROM, RoHS
OS: Windows Embedded 8 (DVD-ROM)	IKARPC-W10A-WE8S-R10	OS image with Windows® Embedded Standard 8 E for IKARPC-W10A Series, WE8S license label, DVD-ROM, RoHS
Wireless kit	IKARPC-WIFI-KIT02-R10	1T1R wifi module kit for embedded system, IEEE802.11a/b/g/n/ac WiFi with Bluetooth 4.0/3.0+HS, 1 x wifi module, RoHS
WWAN kit	IKARPC-3G-KIT02-R10	F260 3.75G module kit for embedded system, with BT V2.1, RoHs
VESA mount stand	IVI-MK02-R10	286mm 75x75 / 100x100 VESA mount stand

Packing List

Item	Part No.	Qty	Description
Power Cable w/ core	32002-001900-100-RS	1	Round cable, power cable, 3000mm, RoHS
	30600-000056-RS	1	Cable Core 13φ, 33x31.5x33mm, RoHS
GPS/GSM Antenna	32506-000100-100-RS	1	Integration antenna, GPS/GSM, RG 174, 5000mm/5000mm, PPF-5423SA5X-999, Magnetic mount: φ55x22mm, 1575.42MHz/850MHz/900MHz/1800MHz/1900MHz, SMA plug x 2

IVS-200-ULT2

Vehicle Surveillance System

Features

- Intel® i5-5350U dual-core 1.8 GHz CPU or Intel® Celeron® 3755U dual-core 1.7 GHz CPU
- Four Intel® GbE LAN ports
- 9 V ~ 36 V DC input
- Two RS-232/422/485
- E-Mark certification





Specifications

Model Name		IVS-200-ULT2
Chassis	Color	Blue C
	Dimensions (WxHxD) (mm)	255 x 63 x 150
	System Fan	Fanless
	Chassis Construction	Extruded aluminum alloy
Motherboard	CPU	Intel® Core™ i5-5350U 1.8 GHz (up to 2.9 GHz, dual-core, TDP 15W) Intel® Celeron® 3765U 1.9 GHz (dual-core, TDP 15W)
	Chipset	SoC
	System Memory	2 x SO-DIMM DDR3L 1600/1866 (4GB pre-installed)(up to 16GB)
Storage	Hard Drive	1 x 2.5'' SATA 6Gb/s HDD/SSD removable bay
Communication	WLAN	802.11 a/b/g/n/ac (optional)
	Bluetooth	Bluetooth 2.1 (optional)
	WWAN	WCDMA/HSDPA/HSUPA (optional)
I/O Interfaces	USB	2 x USB 3.2 Gen1 2 x USB 2.0
	Ethernet	4 x RJ-45: 1 x GbE by Intel® I218 3 x GbE by Intel® I211
	COM Port	2 x RS232/422/485 with AFC (DB9) 4 x RS232 (DB9)
	Digital I/O	8-bit Digital I/O (4-in/ 4-out)(pin header)
	Display	1 x HDMI (up to 3840 x 2160@30Hz) 1 x VGA (up to 1920 x 1600@60Hz)
	Audio	1 x Line-out, 1 x Mic-in
	Antenna	1 x 3G, 1 x BT, 1 x Wi-Fi
	Other	1 x Power button, 1 x Reset button, 1 x AT/ATX Switch, 1 x ACC Switch, 1 x LED for Power (Red), 1 x LED for HDD (Green)
Expansions	PCIe Mini	1 x Full-size with SIM card slot (PCIe/USB 2.0) 1 x Full-size (PCIe/USB 2.0/SATA)
Power	Power Input	DC Jack: 9 ~ 36V DC
	Power Consumption	12V @ 2.1A (Intel® i5-5350U with 4GB memory)
Reliability	Mounting	VESA 100
	Operating Temperature	-20°C ~ 60°C with air flow, 10% ~ 95% non-condensing
	Storage Temperature	-30°C ~ 70°C with air flow, 10% ~ 95% non-condensing
	Operating Shock	Half-sine wave shock 5G, 11ms, 100 shocks per axis (SSD)
	Operating Vibration	MIL-STD-810F 514.5C-2 (SSD)
	Weight (Net/Gross)	2.2KG/ 3.0KG
	Safety/EMC	CE/ FCC/ E-Mark
	Watchdog Timer	Programmable 1 ~ 255 sec/min
OS	Supported OS	Microsoft® Windows Embedded 8, Microsoft® Windows Embedded, Standard 7 E

Fully Integrated I/O

Front view

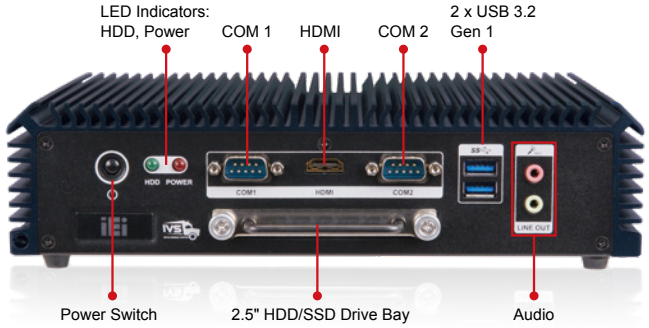

Rear view

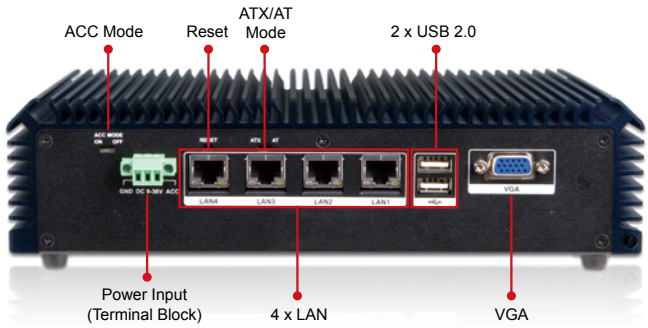

Dimensions *(Unit: mm)*

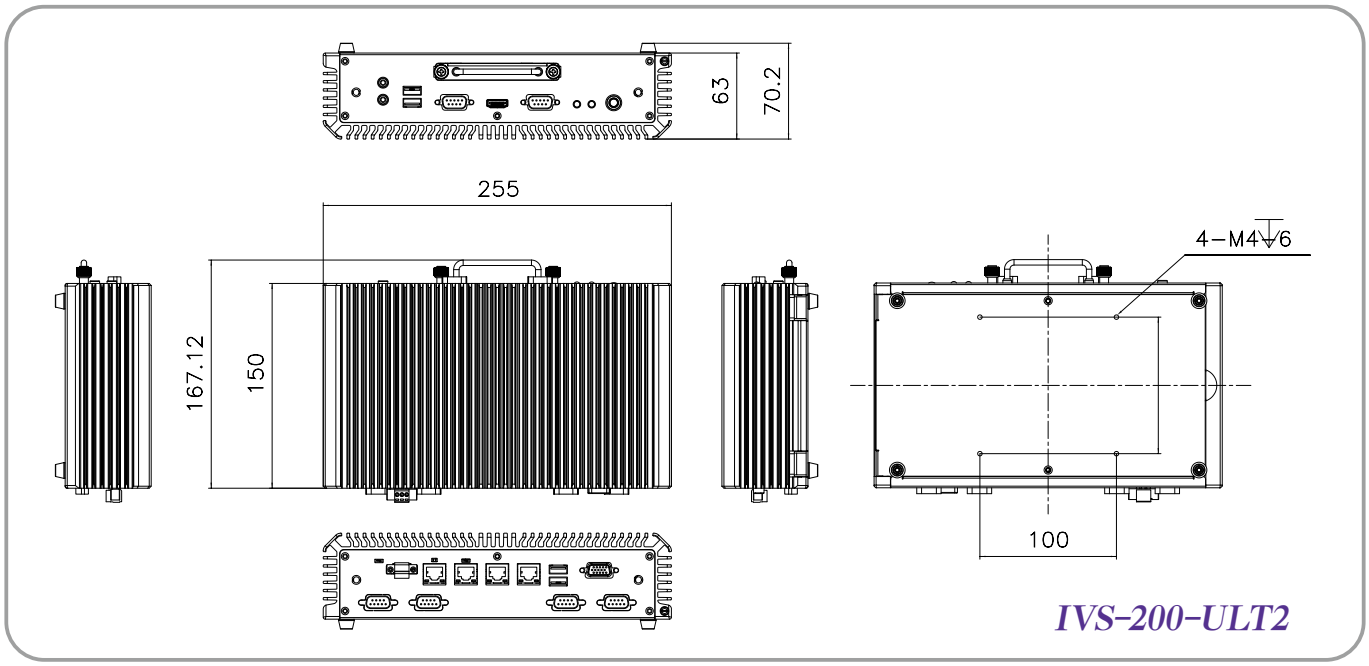

Ordering Information

Part No.	Description
IVS-200-ULT2-i5/4G-R11	Fanless system with Intel® Core™ i5-5350U CPU, up to 2.9GHz, TDP 15W, four GbE LAN ports, one HDMI, one VGA, two RS-232/422/485, one 2.5" removable SATA HDD bay, 4 GB memory pre-installed, 9 V~36 V DC, RoHS
IVS-200-ULT2-C/4G-R11	Fanless system with Intel® Celeron® 3765U 1.7GHz CPU, TDP 15W, four GbE LAN ports, one HDMI, one VGA, two RS-232/422/485, one 2.5" removable SATA HDD bay, 4 GB memory pre-installed, 9 V~36 V DC, RoHS

Options

Item	Part No.	Description
OS	IVS-200-ULT2-WES7E64-R10	OS image with Windows® Embedded Standard 7 E 64-bit for IVS-200-ULT2, DVD-ROM, RoHS
Serial cable	32205-005400-100-RS	RS-232 cable, 150 mm, 2x5 pin
DIO cable	32231-000100-200-RS	DIO cable, 150 mm, 2x5 pin
Wireless kit	EMB-WIFI-KIT01-R20	1T1R wifi module kit for embedded system, IEEE802.11a/b/g/n/ac WiFi with Bluetooth 4.0/3.0+HS, 1 x wifi module, 2 x 250mm RF cable, 2 x Antenna, RoHS
3G Module	IVS-3G-KIT02-R10*	3G module kit for embedded system, F260, 1 x 3G module, RoHs
Antenna	32505-004200-100-RS*	WLAN;LTE FULL BAND ANTENNA;RG 178;137MM;RFA-LTE-C55-U-B70-1;Peak Gain:4dBi;50Ω;ARISTOTLE;700 ~2700MHz;VSWR≤4.0;SMA PLUG;RoHS
RF Cable	32501-000704-100-RS*	RF;RF CABLE FOR DVBT;LINE DIAMETER:1.37mm;263MM;50Ω;Exceltek;0-6GHz;VSWR≤1.5;I-PEX;SMA JACK;NUT*1;WASHER*2;RoHS

* Each 3G module needs two antennas and two RF cables to fully support 3G function.

Packing List

Item	Part No.	Qty	Description
Screw pack	44013-030041-RS	4	Screw pack
	44005-030083-RS	4	Screw pack
Wall mount kit	41020-0433C2-00-RS	2	Wall mount bracket

IVS-110-AL

Vehicle Fleet Management System

Features

- Intel® Apollo Lake processor
- Dual SIM slot
- Optional 3G/Wi-Fi
- 16 x DI/DO
- 1 x HDMI (lockable), 1 x VGA
- Built-in GPS function
- E-Mark certification
- Built-in OBD-II/J1939
- IP4X protection





Specifications

Model		IVS-110-AL
Chassis	Color	Black
	Dimensions (WxDxH) (mm)	261 x 170 x 60
	System Fan	Fanless
	Chassis Construction	Extruded aluminum alloy
Motherboard	CPU	Intel® Atom™ x7-E3950 1.6 GHz (up to 2.0 GHz, quad-core, TDP 12W)
	Chipset	SoC
	System Memory	1 x SO-DIMM DDR3L 1600/1866 (4GB pre-installed)(up to 8GB)
Storage	Hard Drive	1 x 2.5" SATA 6Gb/s HDD/SSD bay
	eMMC	1 x eMMC5.0 (optional)
Communication	WLAN	802.11 a/b/g/n/ac (optional)
	Bluetooth	BT 4.0/3.0+HS (optional)
	WWAN	WCDMA/HSDPA/HSUPA (optional)
	GPS	On-board GPS
I/O Interfaces	USB	4 x USB 3.2 Gen1
	Ethernet	1 x RJ-45: 1 x GbE by Intel® I210
	COM Port	1 x RS232/422/485 with AFC (DB9)
	Digital I/O	16-bit Digital I/O (8-in/ 8-out)
	OBD-II	1 x OBD-II/J1939 (DB9)
	Display	1 x HDMI (up to 3840 x 2160@30Hz) 1 x VGA (up to 1920 x 1600@60Hz)
	Audio	1 x Line-out
	Antenna	1 x 3G, 1 x GPS, 1 x BT, 1 x Wi-Fi
	Other	1 x Power Button, 1 x LED for HDD, 1 x LED for Wi-Fi, 2 x LED for SIM
Expansions	PCIe Mini	1 x Full/Half-size with SIM card slot (PCIe/USB 2.0) 1 x Full/Half-size with SIM card slot (PCIe/USB 2.0) 1 x Half-size (PCIe/USB 2.0)
Power	Power Input	Cigarette lighter power cable: 9 ~ 36V DC
	Power Consumption	12V @ 5A (Intel® x7-E3950 with 8GB memory)
Reliability	Mounting	Wall-mount/ VESA 100
	Operating Temperature	-30 ~ 70°C with air flow (SSD), 10% ~ 95% non-condensing
	Storage Temperature	-40 ~ 80°C with air flow (SSD), 10% ~ 95% non-condensing
	Operating Shock	Half-sine wave shock 5G, 11ms, 100 shocks per axis (SSD)
	Operating Vibration	MIL-STD-810F 514.5C-2 (SSD)
	Weight (Net/Gross)	2.4KG/ 3.8KG
	Safety/EMC	CE/ FCC/ E-Mark
	IP Rating	IP 4X compliant
	Watchdog Timer	Programmable 1 ~ 255 sec/min
OS	Supported OS	Microsoft® Windows 10

Fleet Management Tracking System



Fully Integrated I/O

Front view

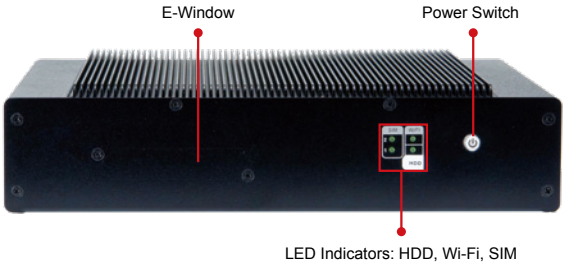

Side view

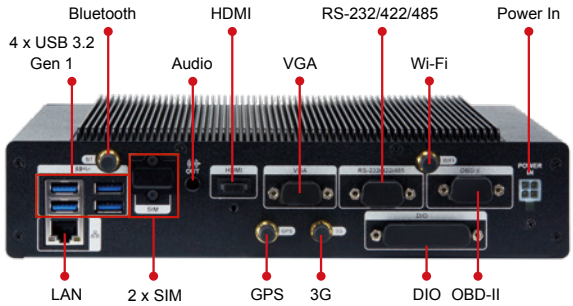

Dimensions (Unit: mm)

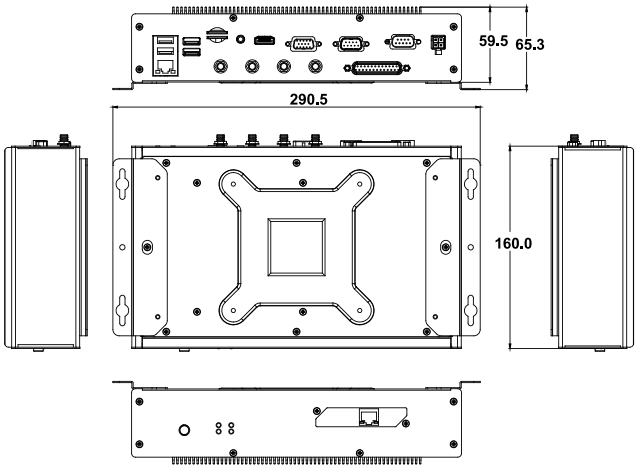

IVS-110-AL

Ordering Information

Part No.	Description
IVS-110-AL-E3/4G-R10	Fanless embedded system with Intel® Atom™ x7-E3950 (12W) Processor with 4GB DDR3L pre-installed memory, on-board GPS, HDMI, VGA, one GbE LAN, one 2.5" SATA HDD bay, two SIM slots, RoHs

Options

Item	Part No.	Description
GPS/LTE antenna	32506-000400-100-RS	Integration Antenna, Magnetic Antenna Base+GPS/4G LTE ANTENNA, RG 174, 5000MM, AU-4S-LTE, GPS Gain:27dB, LTE, Gain:0dBi, 50Ω, SANAV, 1575.42MHz/704-960MHz/1710-2766MHz, VSWR ≤ 2.0, SMA PLUG, REVERSE SMA PLUG, RoHS
Power adapter	IVIPOWER-4PIN-R20	Power adapter with 4-pin transfer cable, RoHS
OBD-II cable	32025-003400-100-RS	Round cable, OBD-II cable, 2000 mm, 24 AWG, (A) OBD-II 16P male, (B) D-sub 9P female, one piece package with label, RoHS
Cigarette lighter power cable	32002-004000-100-RS	Round cable, power cable, car cigarette lighter cable, 2000 mm, 18 AWG, (A) cigarette lighter (5 A 250 V)+ ψ3 green LED, (B) MOLEX 5557-0400 P=4.2, SHANGHAI YING YU, RoHS
Wireless kit	IVS-WIFI-KIT02-R10	1T1R Wi-Fi module kit for embedded system, IEEE802.11a/b/g/n/ac Wi-Fi with Bluetooth 4.0/3.0+HS, 1 x Wi-Fi module, 2 x Antenna, RoHS
WWAN kit	IVS-3G-KIT02-R10	3G module kit for embedded system, F260, 1 x 3G module, RoHs
ACC power cable	32002-001900-100-RS	Round cable, power cable, 3000 mm, 16 AWG, (A) MOLEX 5557-04P P=4.2, SHANGHAI YING YU, RoHS

Packing List

Item	Part No.	Qty	Description
Screw pack	44005-030083-RS	4	Screw pack
	42005-000603-RS	4	Screw pack
	44003-030052-RS	4	Screw pack
	44045-020031-RS	5	Screw pack
SATA cable	32801-003608-100-RS	1	Sata cable, 3, 150mm/150mm, 26AWG, SATA 7+15P female 180°, SATA 7P female 90°+lock, JST PHR-2 P=2.0, One pcs PKG W/ label, RoHS
Wall mount kit	41020-0482C2-00-RS	2	Wall mount bracket

E-Window (for ATO assembly)

Part No.	Description
E-MPCIE-LAN-R10	PCIe Mini card supports 1-port GbE with Realtek RTL8111E controller, with PMS 194C I/O bracket and 250mm cable, R10
E-MPCIE-DLAN-R10	PCIe Mini card supports 2-port GbE with Intel I211 controller, with PMS 194C I/O bracket and 250mm cable, R10
E-MPCIE-UART-KIT02-R10	PCI Express Mini supports Dual RS-232/422/485, 16-bit GPIO module, full-size, RoHs

IRS-100-ULT3

Railway Surveillance System

Features

- Intel® Skylake ULT processor
- Dual M12 LAN port
- VGA / DVI dual display
- Dual SIM card design
- 24V and 110V DC input (±40%) DC input
- 2 x 2.5" hot-swappable SATA SSD drive bay
- EN 50155





Specifications

Model Name		IRS-100-ULT3
Chassis	Color	Blue C
	Dimensions (WxHxD) (mm)	290 x 225 x 69
	System Fan	Fanless
	Chassis Construction	Extruded aluminum alloy
Motherboard	CPU	Intel® Core™ i5-6300U 2.4 GHz (up to 3.0 GHz, dual-core, TDP 15W)
	Chipset	SoC
	System Memory	2 x SO-DIMM DDR4 2400 (4GB pre-installed)(up to 32GB)
Storage	Hard Drive	2 x 2.5" SATA 6Gb/s HDD/SSD removable bay
	C-Fast	1 x C-Fast card slot
I/O Interfaces	USB	2 x USB 3.2 Gen1 1 x USB 2.0 (M12)
	Ethernet	2 x M12: 2 x GbE by Intel® I211
	COM Port	2 x RS232/422/485 with AFC (DB9 with 1.5kV isolation)
	Digital I/O	8-bit Digital I/O (4-in/ 4-out)(with 1.5kV isolation)
	Display	1 x VGA (up to 1920 x 1200@60Hz) 1 x DVI-D (up to 1920 x 1200@60Hz)
	Audio	1 x Line-out, 1 x Mic-in
	Wireless	1 x 802.11a/b/g/n/ac (optional)
	Other	1 x Power Button, 1 x Reset Button, 1 x AT/ATX Switch, 2 x LED for HDD, 2 x LED for LAN, 2 x LED for SIM
Expansions	PCIe Mini	1 x Full-size with SIM card slot (PCIe/USB 2.0) 1 x Full-size with SIM card slot (PCIe/USB 2.0/SATA)
Power	Power Input	M12: 24/ 110V DC
	Power Consumption	4V @ 2A (Intel® i5-6300U with 4GB memory)
Reliability	Mounting	Wall mount
	Operating Temperature	-40 ~ 70°C with air flow (SSD), 10% ~ 95% non-condensing
	Storage Temperature	-40 ~ 85°C with air flow (SSD), 10% ~ 95% non-condensing
	Operating Shock	Compliant with EN 61373 Category 1 Class B
	Operating Vibration	Compliant with EN 61373 Category 1 Class B
	Weight (Net/Gross)	3.9KG/ 5.1KG
	Safety/EMC	CE/ FCC/ Compliance with EN50155, EN50121
	Watchdog Timer	Programmable 1 ~ 255 sec/min
OS	Supported OS	Microsoft® Windows® Embedded 8, Microsoft® Windows® Embedded Standard 7 E

Fully Integrated I/O

Front view

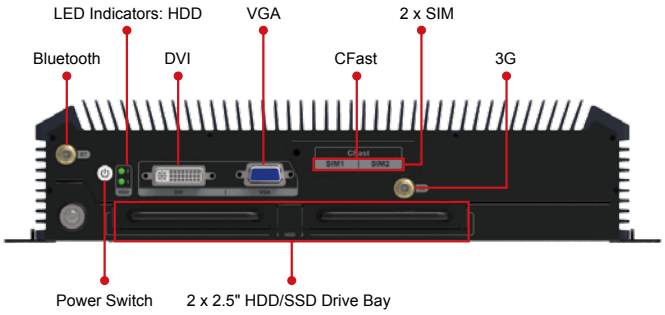

Rear view

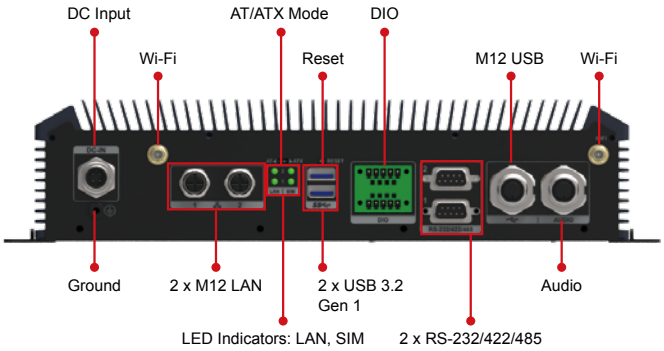

Dimensions *(Unit: mm)*

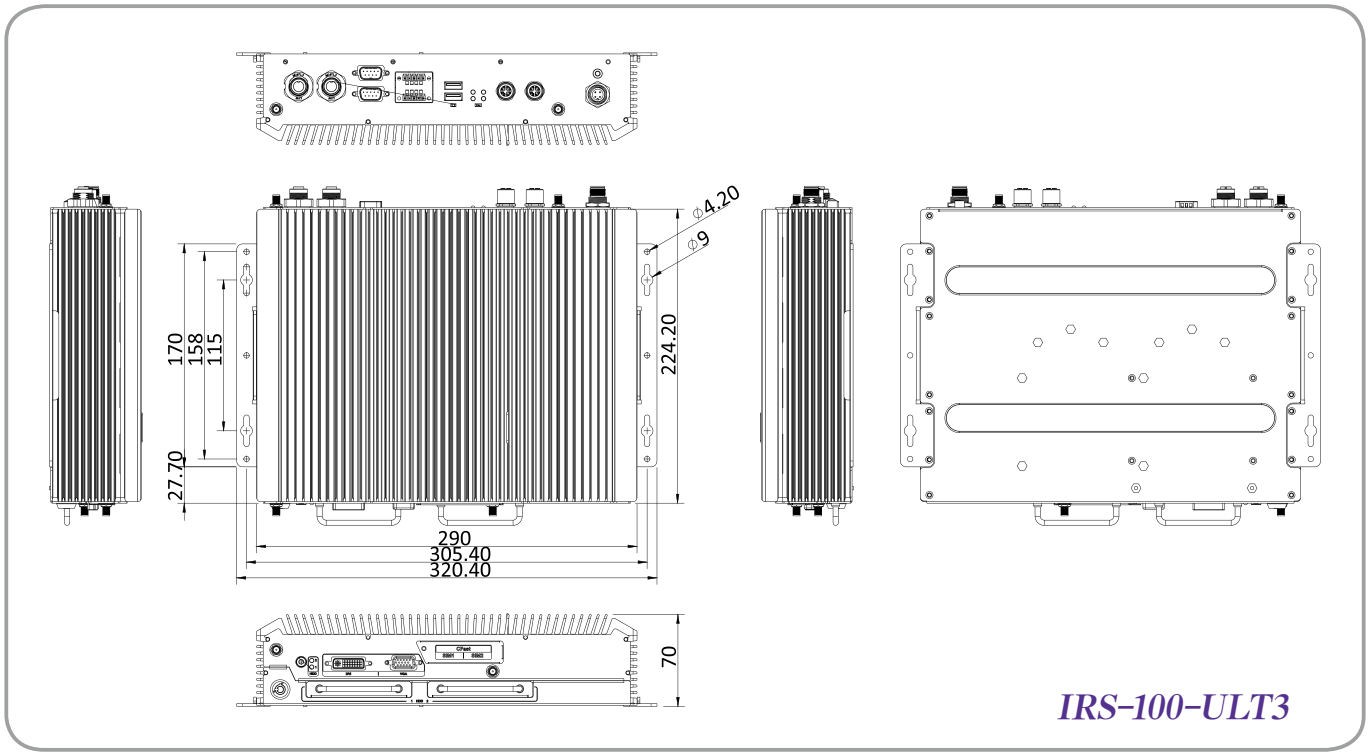

Ordering Information

Part No.	Description
IRS-100-ULT3-i5/4G-R10	Fanless railway system with Intel® Core™ i5-6300U processor (15W), 4GB DDR4 pre-installed memory, two 2.5" SATA SSD bays, VGA, DVI, two M12 GbE LAN

Options

Item	Part No.	Description
OS	IRS-100-ULT3-WES7E64-R10	OS image with Windows® Embedded Standard 7 E 64-bit for IRS-100-ULT3, DVD-ROM, RoHS
DC cable	32002-009000-100-RS	Power cable, 2000 mm, 16AWG, M12 5-pin female; label: V+, V-, GND; RoHS
USB cable	32001-022700-200-RS	USB cable, 2000 mm, 24AWG; (A) Amphenol LTW: M12 5-pin male IP68 (12-05BMMA-SL8001), (B) USB Type A 4-pin female; RoHS
LAN cable	32013-003400-100-RS	LAN cable, 1000 mm, 26AWG; (A) METZ: M12 plug 8-pin (MNF881A315-001), (B) RJ-45 8P8C plug; RoHS
Audio cable	32007-005400-100-RS	Audio cable, 1200 mm, 28AWG; A) Amphenol LTW: M12 5-pin male (12-05BMMA-SL8001), (B) DC stereo jack: 3.5mm*2; RoHS
Wireless kit	IRS-100-WIFI-KIT02-R10	1T1R Wi-Fi module kit for embedded system, IEEE802.11a/b/g/n/ac Wi-Fi with Bluetooth 4.0/3.0+HS, 1 x Wi-Fi module, 2 x antennas, 2 x cables RoHS
WWAN kit	IRS-100-3G-KIT02-R10	3G module kit for embedded system, F260, 1 x 3G module, 1 x antenna, 2 x cables, RoHs

Packing List

Item	Part No.	Qty	Description
Wall mount kit	41020-0474C2-00-RS	2	Wall mount bracket
Screw pack	44015-030061-RS	16	Screw pack

SBOX-100-QM87

Maritime Embedded System

Features

- Fanless marine computer with 4th generation Intel® Core™ i5 dual-core processor
- -15°C ~ +55°C wide temperature
- Isolation protection
  - » 4 x RS-232/422/485 isolated serial ports
  - » Isolated 24 VDC (with tolerance from 18V to 36V)
  - » 2 x Isolated CAN-bus 2.0B
- 2 x 2.5" SSD bay with RAID 0/1 function
- Supports IEI iRIS-2400 (IPMI 2.0 compliant)

IEI Marine System



IPMI 2.0 Compliant | Fanless | CAN-Bus | Triple Display | Dual HDD | DNV

Intel® Core™ i5 High Performance Computing Power in a Fanless Design

IEI's high performance marine solutions are built with the powerful Intel® Core™ i5 CPU within a fanless system architecture. No matter your applications are general marine system management, monitoring or conning systems, radar systems, or ECDIS navigation, IEI's marine computers will give you the most stability than ever.

- Improved CPU performance with Intel® 22nm 4th Generation Mobile Core™ i5-4400E 2.7 GHz processor
- Two 204-pin 1600/1333MHz dual-channel DDR3 SDRAM support up to 16 GB

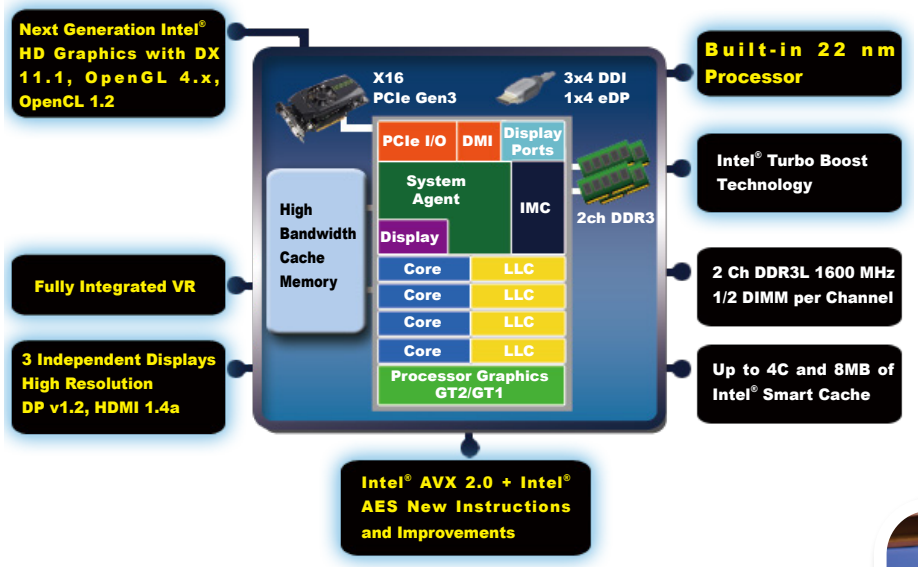



With IEI's fanless solutions, your vessels can avoid the bothersome of replacement of fan, increasing safety and efficiency for the crew and the entire ship.

Three independent aluminum heat sinks help the heat dissipate averagely, and help the system efficiently achieve wide operating temperature range between -15°C~55°C.

3 independent displays: HDMI, DVI, and VGA

The three simultaneously independent displays are supported via the on-board video output combinations of VGA, DVI and HDMI. This versatile combination of display output options make the marine system ideal for multi-monitor required applications in the bridge room.





Multiple Isolated Ports for Comprehensive Protection against Electrical Surges

Ground loop and electric surges are common in the marine applications of electronic products due to the dense placement of devices. These stray electrical signals can cause equipment damage or malfunction.



■ 2.5 kV isolation protection on the RS-232/422/485

IEI marine computer is protected from any stray electrical signals from other devices on the ship. Electric surges that were generated from other electronic devices which often passed through serial lines to the marine computer can cause severe damage and malfunction to the computers.

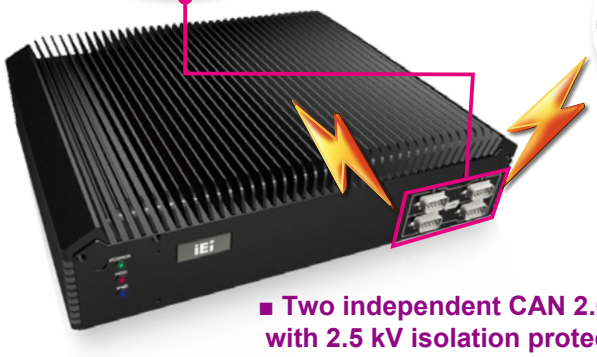

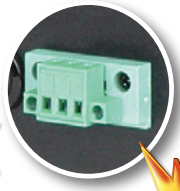

■ Isolated 24 VDC (with tolerance from 18 to 36V) power 2250 V DC Input to Output Basic Insulation



■ Two independent CAN 2.0B channels with 2.5 kV isolation protection

CAN 2.0B is a kind of marine electronic data network for communication between marine electronic devices such as chart plotters, navigation instruments, GPS receivers, etc.



IEI Remote Intelligent Management System

The marine computer supports IEI iRIS remote management solution which helps users to manage multiple devices through single management interface and elevates work efficiency. The iRIS solution only requires a module and Internet connection!

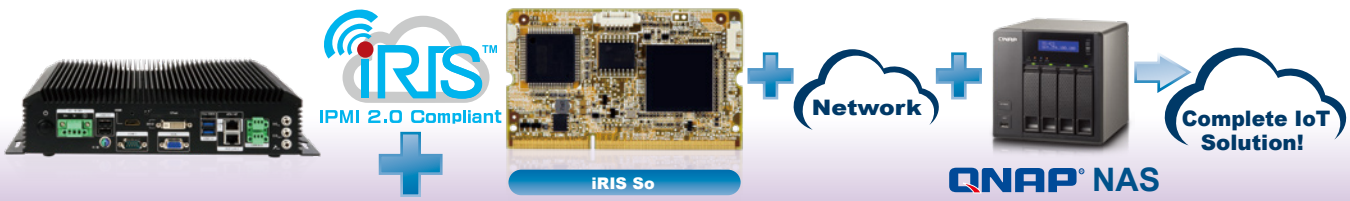

iRIS Key Feature	Detailed Functions
System health monitor	• Hardware monitor • Health log • Event log
Remote system maintenance	• Remote BIOS update • Remote OS recovery • Remote KVM + One Key Recovery • Remote out-off-band backup
Active alert & notice	• Send instant system alerts via e-mail • Send instant system alerts via SMS • Send instant system alerts to management server
Remote device control	• Fan control • Remote KVM • Remote setting BIOS

iRIS Key Feature	Detailed Functions
Screen record	• Remote video streaming record • Event Trigger Setting & video record
Remote power control	• Reset Power • Power Off Server – Immediately • Power Off Server – Orderly • Power On Server • Power Cycle Server
Remote troubleshooting	• Remote software update • Remote OS installation & recovery • Remote KVM • Post code display
Diagnose before dispatch	• Health log analysis • Event log analysis
Group control	• Group control

Fully Integrated I/O

Front view

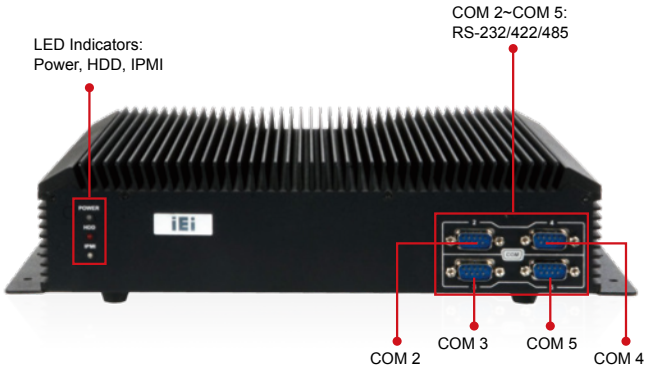

Rear view

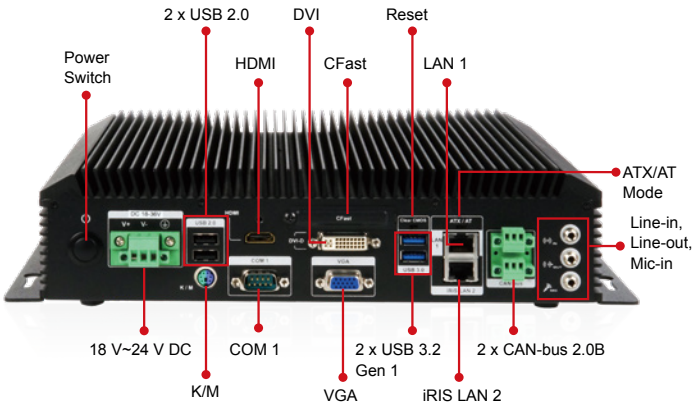

Specifications

Model Name		SBOX-100-QM87
Chassis	Color	Black
	Dimensions (WxHxD) (mm)	290 x 75 x 225
	System Fan	Fanless
	Chassis Construction	Extruded aluminum alloy
Motherboard	CPU	Intel® mobile Core™ i5-4400E (2.7 GHz, 37W)
	Chipset	Intel® QM87
	System Memory	2 x 204-pin DDR3 SO-DIMM slot (system max. 16 GB) Pre-installed 4 GB DDR3 SO-DIMM
IPMI	iRIS Solution	iRIS-2400
Storage	Hard Drive	2 x 2.5" SATA 6Gb/s SSD bay with RAID 0/1 function
	CF Card/CFast	1 x CFast
I/O Interfaces	PS2 (KB/MS)	1
	USB 3.2 Gen 1	2
	USB 2.0	2
	Ethernet	2 x RJ-45 with teaming support 1 x PCIe GbE by Intel® I217LM 1 x PCIe GbE by Intel® I210-AT (2 with 2 kV isolation)
	COM Port	1 x DB-9 (non-isolated) 4 x RS-232/422/485 (with 2.5 kV isolation)
	CAN-bus/OBD-II	2 x CAN-bus (with 2.5 kV isolation)
	Display	1 x VGA, 1 x DVI-D, 1 x HDMI
	Resolution	VGA: Up to 1920 x 1200 @ 60 Hz HDMI: Up to 2500 x 1600 @ 60 Hz DVI-D: Up to 2500 x 1600 @ 60 Hz
	Audio	1 x Line-out, 1 x Line-in, 1 x Mic-in
	Wireless	2 x Antenna SMA hole (reserved)
Expansions	PCIe Mini	2 x Full size
LED Indicator & Button	Indicator	Power (power on: green, power off: orange), storage (red, blinking), IPMI (blue)
Power	Power Input	Terminal block: Isolated 24 VDC (with tolerance from 18 to 36V)
	Consumption	100 W (Intel® mobile Core™ i5-4400E with 4 GB DDR3 memory)
Reliability	Mounting	Wall mount
	Operating Temperature	-15°C ~ 55°C (5°F ~131°F) with air flow (SSD)
	Storage Temperature	-20°C ~ 60°C (-4°F ~140°F)
	Humidity	5% ~ 95%, non-condensing
	Operating Shock	IEC 60945 and DNV 2.4 IASC-E10 compliant
	Operating Vibration	
	Weight (Net/Gross)	4.08 kg / 6.03 kg
	Safety/EMC	EMC/CE/FCC/DNV, IEC 60945 4th, IACS-E10, IEC 61174 compliant IP rating: IP22 compliant rear cover
OS	Supported OS	Microsoft® Windows® Embedded 8, Microsoft® Windows® Embedded Standard 7 E

Dimensions (Unit: mm)

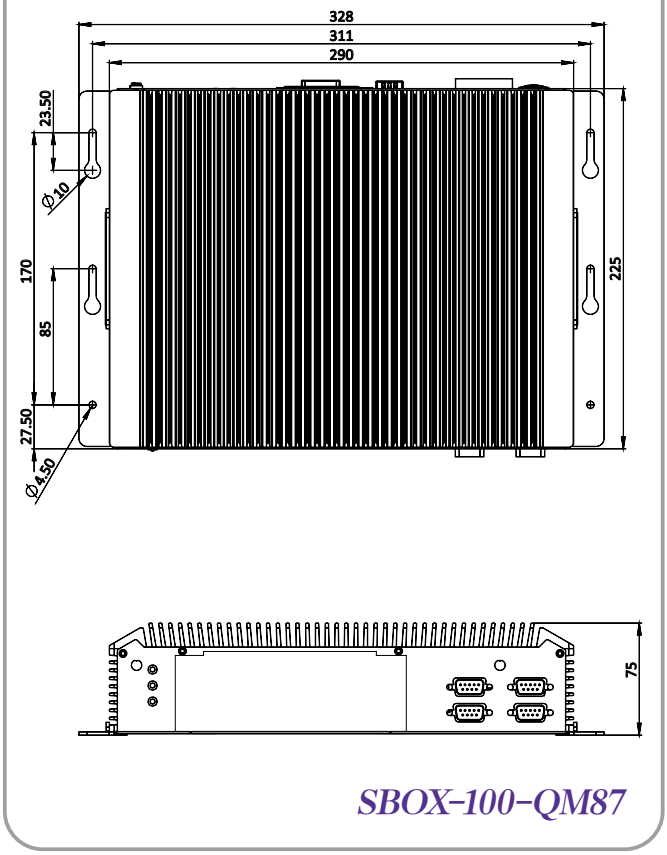

SBOX-100-QM87

Ordering Information

Part No.	Description
SBOX-100-QM87i-i5/4G-R10	Fanless marine computer with Intel® Mobile Core™ i5-4400E 2.7 GHz processor, 4 GB DDR3 memory, iRIS-2400 supported, isolated 18 V~36 V DC, R10

Packing List

Item	P/N	Qty	Description
PS/2 cable	32006-000300-100-RS	1	PS/2 cable
Rubber pad & screw pack		1	Rubber pad & screw pack

FLEX System



New



Model Name		FLEX-BX100-ULT5	FLEX-BX200-Q370
Chassis	Color	PANTONE 296 C	Black
	Dimensions (WxDxH) (mm)	356.5 x 222 x 44	357 x 230 x 88
	System Fan	Fanless	System Fan x3, CPU Cooler x1
	Chassis Construction	Sheet Metal with aluminum	Metal Housing
Motherboard	CPU	Intel® Core™ i5-8365UE Processor (6M Cache, up to 4.10 GHz) Intel® Celeron® Processor 4305UE (2M Cache, 2.00 GHz)	Intel® Core™ i7-8700T Processor (12M Cache, up to 4.00 GHz) Intel® Core™ i5-8500T Processor (9M Cache, up to 3.50 GHz) Intel® Pentium® Gold G5400T Processor (4M Cache, 3.10 GHz)
	Chipset	Intel® Whiskey Lake	Intel® 300 Series Chipsets Q370 (Coffee Lake)
	System Memory	2 x 260-pin 2400 MHz dual-channel DDR4 unbuffered SO-DIMM supporting up to 32GB	2 x 288-pin 2666/2400 MHz dual-channel DDR4 unbuffered DIMM supporting up to 64GB
IPMI	iRIS Solution	N/A	N/A
Storage	Hard Drive	1 x 2.5" SATA 6Gb/s HDD/SSD bay	4 x 2.5" SATA 6Gb/s HDD/SSD bay
	eMMC	N/A	N/A
	Micro SD	N/A	N/A
I/O Interfaces	USB	4 x USB 3.2 Gen.2	6 x USB 3.2 Gen.1
	Ethernet	3 x RJ-45: 1 x GbE LAN 2 x PoE(PD) GbE LAN (IEEE802.3af/at/bt)	2 x RJ-45: 1 x GbE by Intel® I219 1 x GbE by Intel® I211
	COM Port	1 x RS-232/422/485 1 x RS-232	2 x RS-232
	Digital I/O	N/A	N/A
	CAN-bus	N/A	N/A
	Display	1 x HDMI (up to 3840 x 2160@30Hz)	1 x HDMI (up to 3840 x 2160@30Hz)
	Audio	1 x Line-out	1 x Line-out, 1 x Mic-in
	Wireless	1 x 802.11a/b/g/n/ac (optional)	1 x 802.11a/b/g/n/ac (optional)
	TPM	1 x TPM 2.0 (Optional)	1 x TPM 2.0 (2 x 10 pin) (optional)
	Motor Connector	N/A	N/A
	Other	1 x Power switch wits LED, 1 x AT/ATX switch, 1 x Reset button	1 x Power switch wits LED, 1 x AT/ATX switch, 1 x Reset button, 1 x HDD LED
Expansions	PCIe Mini	N/A	N/A
	M.2	1 x 2230 A-Key (PCIe x 1/USB 2.0) 1 x 2280 M-Key (support NVMe SSD)	1 x M.2 A-Key (2230 for Wi-Fi) Optional 1 x M.2 B-Key (2242 for 3G, LTE, 5G) with SIM slot (Optional) 1 x M.2 M Key (2280) socket (support NVMe SSD)
	Backplane	N/A	On board PCIe slot: 2 x PCIe 3.0 x8 (x16 Slot) 2 x PCIe 3.0 x4
Power	Power Input	DC jack 12V DC	100 ~ 240V AC
	Power Consumption	12V @ 3.6A (Intel® Core™ i5-8365UE with 4GB memory)	100 ~ 240V AC @ 4 ~ 2A
	Remote PWR	N/A	N/A
Reliability	Mounting	Wall-Mount	Rack/Wall-Mount
	Operating Temperature	-10°C ~ 50°C (with air flow), 10% ~ 95% (non-condensing)	-10°C ~ 50°C (with air flow), 10% ~ 95% (non-condensing)
	Storage Temperature	-20°C ~ 60°C, 10% ~ 95% (non-condensing)	-20°C ~ 60°C, 10% ~ 95% (non-condensing)
	Operating Shock	Half-sine wave shock 5G, 11ms, 100 shocks per axis (SSD)	Half-sine wave shock 5G, 11ms, 100 shocks per axis (SSD)
	Operating Vibration	MIL-STD-810G 514.6C-1 (SSD)	MIL-STD-810G 514.6C-1 (SSD)
	Weight (Net/ Gross)	3KG/5.5KG	4.1KG/7.2KG
	Safety/EMC	CE/ FCC	CE/ FCC
	Watchdog Timer	Programmable 1 ~ 255 sec/min	Programmable 1 ~ 255 sec/min
OS	Supported OS	Microsoft® Windows 10, Linux	Microsoft® Windows 10, Linux

FLEX System





New



Model Name		FLEX-BX200-C246	FLEX-BX210-Q470	FLEX-BX210-W480
Chassis	Color	Black	Black	Black
	Dimensions (WxDxH) (mm)	357 x 230 x 88	357 x 230 x 88	357 x 230 x 88
	System Fan	System Fan x3, CPU Cooler x1	System Fan x3, CPU Cooler x1	System Fan x3, CPU Cooler x1
	Chassis Construction	Metal Housing	Metal Housing	Metal Housing
Motherboard	CPU	Intel® Xeon® E-2278GE Processor (16M Cache, 3.30 GHz)	Intel® Core™ i9-10900TE Processor (20M Cache, up to 4.60 GHz) Intel® Core™ i5-10500TE Processor (12M Cache, up to 3.70 GHz)	Intel® Xeon® W-1290TE Processor (20M Cache, up to 4.50 GHz)
	Chipset	Intel® C240 Series Chipsets C246 (Coffee Lake)	Intel® 400 Series Chipsets (Comet Lake)	Intel® 400 Series Chipsets (Comet Lake)
	System Memory	2 x 288-pin 2666/2400 MHz dual-channel DDR4 unbuffered DIMM supporting up to 64GB	2 x 288-pin 2933/2666 MHz dual-channel DDR4 unbuffered DIMM supporting up to 64GB	2 x 288-pin 2933/2666 MHz dual-channel DDR4 unbuffered DIMM supporting up to 64GB
IPMI	iRIS Solution	N/A	N/A	N/A
Storage	Hard Drive	4 x 2.5" SATA 6Gb/s HDD/SSD bay	4 x 2.5" SATA 6Gb/s HDD/SSD bay	4 x 2.5" SATA 6Gb/s HDD/SSD bay
	eMMC	N/A	N/A	N/A
	Micro SD	N/A	N/A	N/A
I/O Interfaces	USB	6 x USB 3.2 Gen.1	6 x USB 3.2 Gen.1	6 x USB 3.2 Gen.1
	Ethernet	2 x RJ-45: 1 x GbE by Intel® I219 1 x GbE by Intel® I211	3 x RJ-45: 1 x GbE by Intel® I219 2 x GbE by Intel® I210	3 x RJ-45: 1 x GbE by Intel® I219 2 x GbE by Intel® I210
	COM Port	2 x RS-232	2 x RS-232	2 x RS-232
	Digital I/O	N/A	N/A	N/A
	CAN-bus	N/A	N/A	N/A
	Display	1 x HDMI (up to 3840 x 2160@30Hz)	1 x HDMI (up to 3840 x 2160@30Hz) 1 x DP (up to 4096 x 2304@60Hz)	1 x HDMI (up to 3840 x 2160@30Hz) 1 x DP (up to 4096 x 2304@60Hz)
	Audio	1 x Line-out, 1 x Mic-in	1 x Line-out, 1 x Mic-in	1 x Line-out, 1 x Mic-in
	Wireless	1 x 802.11a/b/g/n/ac (optional)	1 x 802.11a/b/g/n/ac (optional)	1 x 802.11a/b/g/n/ac (optional)
	TPM	1 x TPM 2.0 (2 x 10 pin) (optional)	1 x TPM 2.0 (2 x 10 pin) (optional)	1 x TPM 2.0 (2 x 10 pin) (optional)
	Motor Connector	N/A	N/A	N/A
	Other	1 x Power switch wits LED 1 x AT/ATX switch 1 x Reset button 1 x HDD LED	1 x Power switch wits LED 1 x AT/ATX switch 1 x Reset button 1 x HDD LED	1 x Power switch wits LED 1 x AT/ATX switch 1 x Reset button 1 x HDD LED
Expansions	PCIe Mini	N/A	N/A	N/A
	M.2	1 x M.2 A-Key (2230 for Wi-Fi) Optional 1 x M.2 B-Key (2242 for 3G, LTE, 5G) with SIM slot (Optional) 1 x M.2 M Key (2280) socket (support NVMe SSD)	1 x M.2 A-Key (2230 for Wi-Fi) Optional 1 x M.2 B-Key (2242 for 3G, LTE, 5G) with SIM slot (Optional) 1 x M.2 M Key (2280) socket (support NVMe SSD)	1 x M.2 A-Key (2230 for Wi-Fi) Optional 1 x M.2 B-Key (2242 for 3G, LTE, 5G) with SIM slot (Optional) 1 x M.2 M Key (2280) socket (support NVMe SSD)
	Backplane	On board PCIe slot: 2 x PCIe 3.0 x8 (x16 Slot) 2 x PCIe 3.0 x 4	On board PCIe slot: 2 x PCIe 3.0 x8 (x16 Slot) 2 x PCIe 3.0 x 4	On board PCIe slot: 2 x PCIe 3.0 x8 (x16 Slot) 2 x PCIe 3.0 x 4
Power	Power Input	100 ~ 240V AC	100 ~ 240V AC	100 ~ 240V AC
	Power Consumption	100 ~ 240V AC @ 4 ~ 2A	100 ~ 240V AC @ 6 ~ 3A	100 ~ 240V AC @ 6 ~ 3A
	Remote PWR	N/A	N/A	N/A
Reliability	Mounting	Rack/Wall-Mount	Rack/Wall-Mount	Rack/Wall-Mount
	Operating Temperature	-10°C ~ 50°C (with air flow), 10% ~ 95% (non-condensing)	-10°C ~ 50°C (with air flow), 10% ~ 95% (non-condensing)	-10°C ~ 50°C (with air flow), 10% ~ 95% (non-condensing)
	Storage Temperature	-20°C ~ 60°C, 10% ~ 95% (non-condensing)	-20°C ~ 60°C, 10% ~ 95% (non-condensing)	-20°C ~ 60°C, 10% ~ 95% (non-condensing)
	Operating Shock	Half-sine wave shock 5G, 11ms, 100 shocks per axis (SSD)	Half-sine wave shock 5G, 11ms, 100 shocks per axis (SSD)	Half-sine wave shock 5G, 11ms, 100 shocks per axis (SSD)
	Operating Vibration	MIL-STD-810G 514.6C-1 (SSD)	MIL-STD-810G 514.6C-1 (SSD)	MIL-STD-810G 514.6C-1 (SSD)
	Weight (Net/ Gross)	4.1KG/7.2KG	4.1KG/7.2KG	4.1KG/7.2KG
	Safety/EMC	CE/ FCC	CE/ FCC	CE/ FCC
	Watchdog Timer	Programmable 1 ~ 255 sec/min	Programmable 1 ~ 255 sec/min	Programmable 1 ~ 255 sec/min
OS	Supported OS	Microsoft® Windows 10, Linux	Microsoft® Windows 10, Linux	Microsoft® Windows 10, Linux

FLEX-BX100-ULT5

New



Features

- Fanless embedded system with Intel® Whiskey Lake Intel® Core™ i5-8365UE or Intel® Celeron® 4305UE CPU
- Triple GbE LAN ports
- Support IEEE 802.3bt PoE PD power
- Support M.2 2280 M-Key NVMe SSD

Specifications

Model Name	FLEX-BX100-ULT5
CPU	8th Genertion Intel® Core™ i5-8365UE 4.10GHz 8th Genertion Intel® Celeron® 4305UE 2.00GHz
Memory	2 x 260-pin 2400 MHz dual-channel DDR4 unbuffered SO-DIMM supporting up to 32GB
Graphics Engine	Intel® HD Graphics Gen 9 Engines with 16 low-power execution units, 4K codec decode
Ethernet	Intel® I211/I219 controller
Storage	2.5" HDD/SSD SATA 6Gb/s bay
I/O Ports and Switches	4 x USB 3.2 Gen 2 (10Gbps) 1 x HDMI output 1 x RS-232/422/485 1 x RS-232 3 x GbE LAN (2 for IEEE802.3 PoE PD GbE LAN) 1 x 12V DC jack 1 x Power switch with LED indicator (blue) 1 x AT/ATX switch 1 x Line-out 1 x Reset button
Expansion Slots	1 x NGFF M.2 2230 A Key (PCIe x1, USB signal) 1 x NGFF M.2 2280 M Key (support PCIe 3.0 x 4 NVMe) 2 x PoE PD module socket (by IEI pin definition)
Thermal Solution	Fanless
Watchdog Timer	Software programmable support 1 ~ 255 sec. system reset
Dimensions (mm) (WxHxD)	356.5 x 222 x 44
Net Weight (kgs)	3
Color	PANTONE 296 C
Front Frame	Aluminum
Rear Cover	Sheet Metal
Mouting	Wall mount
Operating Temp.	-10°C ~ 60°C (with air flow)
Storage Temp.	-20°C ~ 70°C
Humidity	10% ~ 95% (non-condensing)
Vibration	5 ~ 17Hz, 0.1 double amplitude displacement 17 ~ 640Hz 1.5G acceleration peak to peak
Shock	10G acceleration part to part (11ms)
Power Input	12V DC input

Fully Integrated I/O

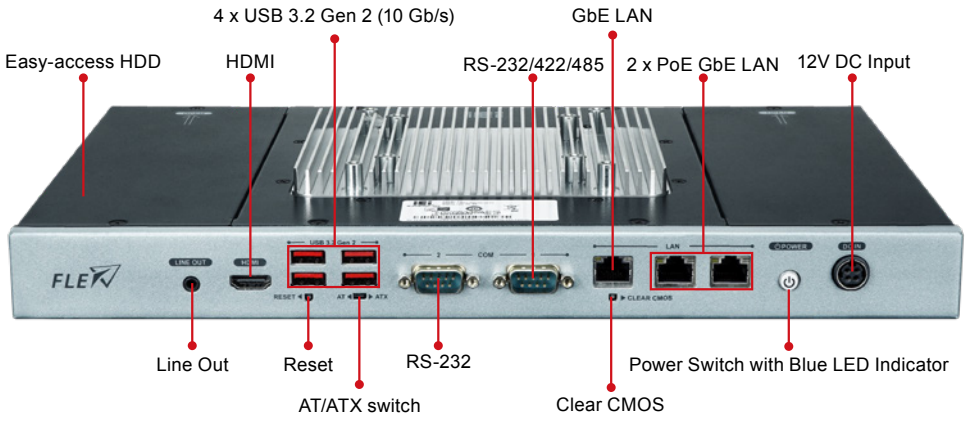

Dimensions *(Unit: mm)*

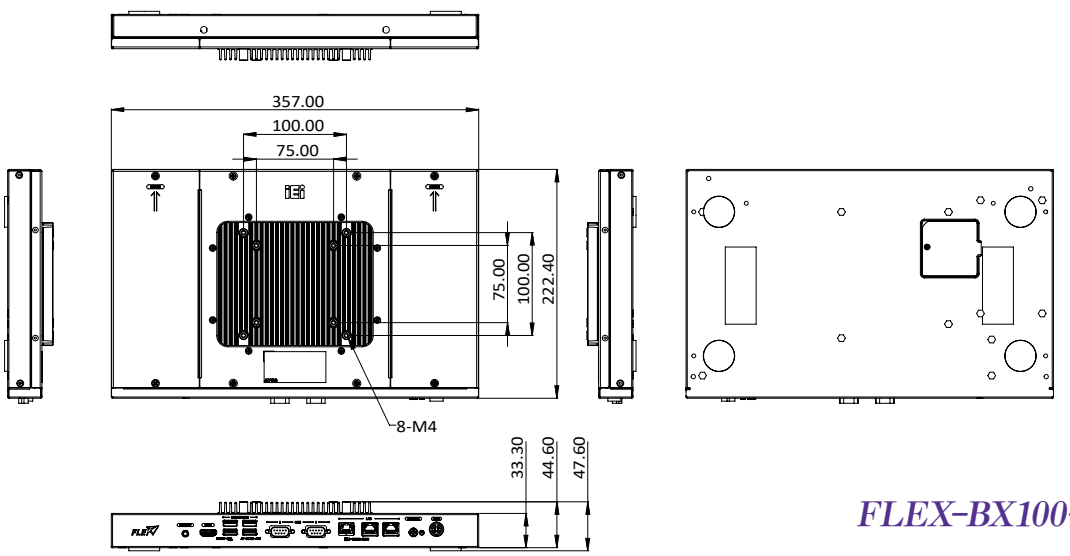

FLEX-BX100-ULT5

Ordering Information

Part No.	Description
FLEX-BX100-ULT5-i5/4G-R10	Fanless embedded system with 8th generation 14nm Intel® Whiskey Lake Core™ i5-8365UE on-board processor (15W TDP, ULT), 4GB DDR4 RAM, 12V DC input, R10
FLEX-BX100-ULT5-C/4G-R10	Fanless embedded system with 8th generation 14nm Intel® Whiskey Lake Celeron® 4305UE on-board processor (15W TDP, ULT), 4GB DDR4 RAM, 12V DC input, R10

Options

Part No.	Description
PoE PD Kit	GPOE-PD-AT01-R10 (PoE IEEE802.3 af/at, 25.5W) GPOE-PD-BT01-R10 (PoE IEEE802.3 af/at/bt, 71W)
Wi-Fi Kit	EMB-WIFI-KIT03E-R10 (2T2R, 802.11ac/a/b/g/n and Bluetooth v4.1, NGFF 2230 Type A-E)

Packing List

Item	Qty	Remark
63040-010096-200-RS	1	AC power adapter
AC power cord	1	
Wall mount bracket	2	
Screws (M4 x 6)	4	for mounting bracket
Screws (M3 x 4)	4	for HDD installation

FLEX-BX200-Q370

2U AI Modular PC with 8th/9th Generation LGA 1151 Intel® Core™ i7/i5/i3, Pentium® and Xeon® Processor



Features

- 2U AI Modular PC supports 8th/9th Gen. LGA 1151 Intel® Core™ i7/i5/i3 and Pentium® processor with Intel® Q370 chipset, or Intel® Xeon® Processor with Intel® C246 chipset
- Four hot-swappable and accessible HDD drive bays, support RAID 0/1/5/10
- Two PCIe 3.0 by 4 and two PCIe 3.0 by 8 slots
- M.2 2280 PCIe Gen 3.0 x4 NVMe™ SSD support

Specifications

Model Name	FLEX-BX200-Q370
CPU	8th/9th Genertion Intel® Core™ i7/i5/i3 porcessors in the LGA 1151 package (Please choose the TDP of the the processor under 65W)
Chipset	Intel® 300 Series Chipsets Q370 (Coffee Lake)
Memory	2 x 288-pin 2666/2400 MHz dual-channel DDR4 unbuffered DIMM supporting up to 64GB
Graphics Engine	Intel® HD Graphics Gen 9 Engines with Low power 16 execution unit, supports DX2015, OpenGL 5.X and OpenCL2.x, ES 2.0
Ethernet	Intel® I211/I219 controller
Storage	4 x accessible 2.5" HDD/SSD SATA 6 Gb/s bay (with RAID 0/1/5/10 support) with LED indicator 1 x NGFF M.2(2280) M Key socket (support NVMe SSD)
I/O Ports and Switches	1 x HDMI output 2 x GbE LAN 6 x USB 3.2 Gen 1 (5Gb/s) Type-A 2 x RS-232 DB-9 type 1 x Mic in 1 x Line out 1 x AC Inlet Power button with power LED (power on=Blue) AT/ATX mode switch Reset button
Expansion Slots	2 x PCIe 3.0 by 8 (by 16 slot) 2 x PCIe 3.0 by 4 (Maximum card size supported: 68 mm x 167 mm) 1 x NGFF M.2 (2230) A Key socket (support Wi-Fi) 1 x NGFF M.2 (3042) B Key socket (support WWAN wits SIM slot)
Thermal Solution	System Fan x3, CPU Cooler x1
Power supply	AC input ATX power supply 350W power supply - Input: 115VAC~264VAC, 50/60Hz - Output (Max.): 3.3V@14A, 5V@16A, 12V@29A, -12V@0.3A, +5Vsb@3A - Efficiency: Full load (100%) 87%, Typical load (50%) 90%, Light load (20%) 87%
Watchdog Timer	Software Programmable support 1 ~ 255 sec. System reset
Chassis Construction	Metal Housing
Mounting	Wall and Rack Mount
Color	Black
Dimensions (LxDxH) (mm)	357 x 230 x 88
Weight (kg) Net/Gross	4/6
Operating Temperature	-20°C ~ 50°C (with SSD and TDP 65W processor) -20°C ~ 40°C (with HDD or add-on cards without fan)
Storage Temperature	-20°C ~ 60°C
Operating Humidity	5% ~ 95%, non-condensing
Vibration	5 ~ 17Hz, 0.1 double amplitude displacement 17 ~ 640Hz 1.5G acceleration peak to peak
shock	10G acceleration part to part (11ms)

Fully Integrated I/O

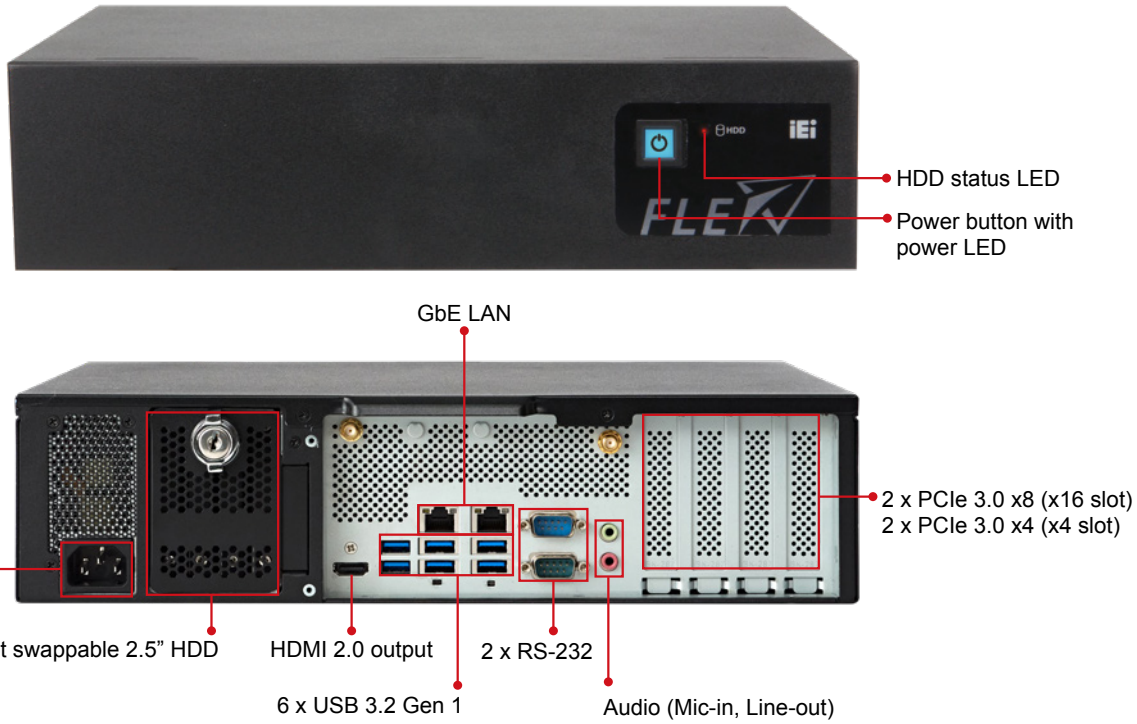

Dimensions *(Unit: mm)*

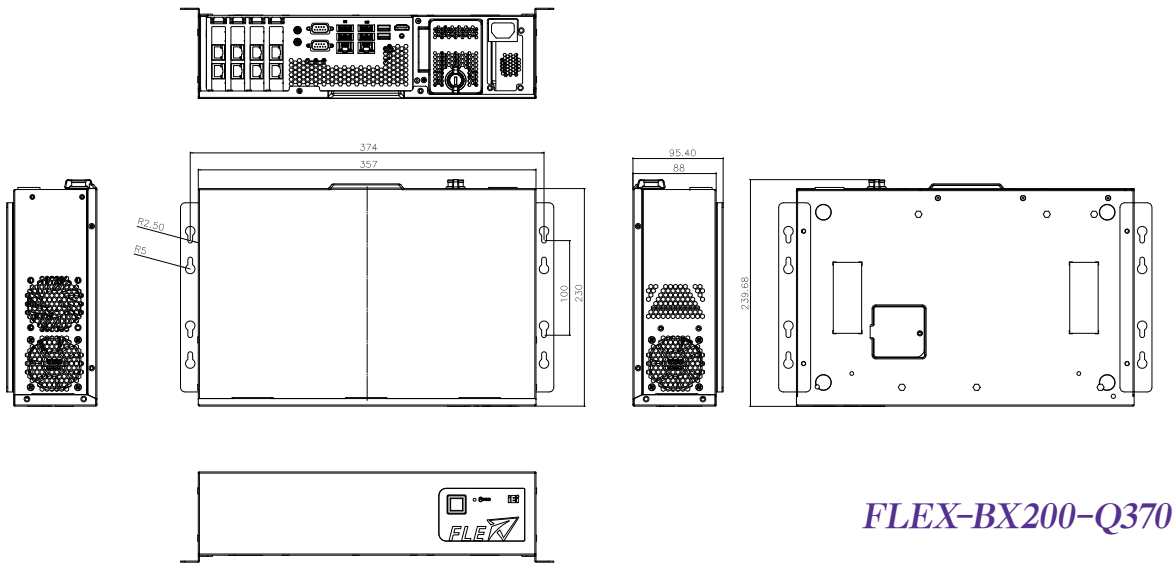

FLEX-BX200-Q370

Ordering Information

Part No.	Description
FLEX-BX200-C246-XE/35-R20	2U AI Modular Box PC, Intel® Xeon® E-2176G Processor (6-core, 12-thread, 3.7 GHz), TDP 80W, two PCIe x4 and two PCIe x8 slots, four HDD bays, 350W PSU, R20
FLEX-BX200-Q370-P/35-R20	2U AI Modular Box PC, Intel® Pentium® Gold G5400T Processor (2-core, 4-thread, 3.10 GHz) TDP 35W, two PCIe x4 and two PCIe x8 slots, four HDD bays, 350W PSU, R20
FLEX-BX200-Q370-i3/35-R20	2U AI Modular Box PC, Intel® Core™ i3-8100T Processor (4-core, 4-thread, 3.10 GHz) TDP 35W, two PCIe x4 and two PCIe x8 slots, four HDD bays, 350W PSU, R20
FLEX-BX200-Q370-i5/35-R20*	2U AI Modular Box PC, Intel® Core™ i5-8500T Processor (6-core, 6-thread, 2.1 GHz) TDP 35W, two PCIe x4 and two PCIe x8 slots, four HDD bays, 350W PSU, R20
FLEX-BX200-Q370-i7/35-R20*	2U AI Modular Box PC, Intel® Core™ i7-8700T Processor (6-core, 12-thread, 2.4 GHz) TDP 35W, two PCIe x4 and two PCIe x8 slots, four HDD bays, 350W PSU, R20

Options

Part No.	Description
FLEX-BXRK-R10	Rack mount kit

Packing List

Item	Qty	Remark
32702-000200-100-RS	1	European power cord, 1830mm
41020-0521C2-00-RS	2	wall mount kit, black
44035-040062-RS	4	M4 x 6 oval head screw for wall mount kit, black
	1	Key for HDD cover

FLEX-BX200-C246

2U AI Modular PC with 8th/9th Generation LGA 1151 Intel® Core™ i7/i5/i3, Pentium® and Xeon® Processor



Features

- 2U AI Modular PC supports 8th/9th Gen. LGA 1151 Intel® Core™ i7/i5/i3 and Pentium® processor with Intel® Q370 chipset, or Intel® Xeon® Processor with Intel® C246 chipset
- Four hot-swappable and accessible HDD drive bays, support RAID 0/1/5/10
- Two PCIe 3.0 by 4 and two PCIe 3.0 by 8 slots
- M.2 2280 PCIe Gen 3.0 x4 NVMe™ SSD support

Specifications

Model Name	FLEX-BX200-C246
CPU	Intel® Xeon® E-2176G Processor in the LGA 1151 package
Chipset	Intel® C240 Series Chipsets C246 (Coffee Lake)
Memory	2 x 288-pin 2666/2400 MHz dual-channel DDR4 SDRAM ECC and non-ECC unbuffered DIMMs support up to 64 GB
Graphics Engine	Intel® HD Graphics Gen 9 Engines with Low power 16 execution unit, supports DX2015, OpenGL 5.X and OpenCL2.x, ES 2.0
Ethernet	Intel® I211/I219 controller
Storage	4 x accessible 2.5" HDD/SSD SATA 6 Gb/s bay (with RAID 0/1/5/10 support) with LED indicator 1 x NGFF M.2(2280) M Key socket (support NVMe SSD)
I/O Ports and Switches	1 x HDMI output 2 x GbE LAN 6 x USB 3.2 Gen 1 (5Gb/s) Type-A 2 x RS-232 DB-9 type 1 x Mic in 1 x Line out 1 x AC Inlet Power button with power LED (power on=Blue) AT/ATX mode switch Reset button
Expansion Slots	2 x PCIe 3.0 by 8 (by 16 slot) 2 x PCIe 3.0 by 4 (Maximum card size supported: 68 mm x 167 mm) 1 x NGFF M.2 (2230) A Key socket (support Wi-Fi) 1 x NGFF M.2 (3042) B Key socket (support WWAN wits SIM slot)
Thermal Solution	System Fan x3, CPU Cooler x1
Power supply	AC input ATX power supply 350W power supply - Input: 115VAC~264VAC, 50/60Hz - Output (Max.): 3.3V@14A, 5V@16A, 12V@29A, -12V@0.3A, +5Vsb@3A - Efficiency: Full load (100%) 87%, Typical load (50%) 90%, Light load (20%) 87%
Watchdog Timer	Software Programmable support 1 ~ 255 sec. System reset
Chassis Construction	Metal Housing
Mounting	Wall and Rack Mount
Color	Black
Dimensions (LxDxH) (mm)	357 x 230 x 88
Weight (kg) Net/Gross	4/6
Operating Temperature	-20°C ~ 40°C (with SSD and TDP 80W processor)
Storage Temperature	-20°C ~ 60°C
Operating Humidity	5% ~ 95%, non-condensing
Vibration	5 ~ 17Hz, 0.1 double amplitude displacement 17 ~ 640Hz 1.5G acceleration peak to peak
shock	10G acceleration part to part (11ms)

Fully Integrated I/O

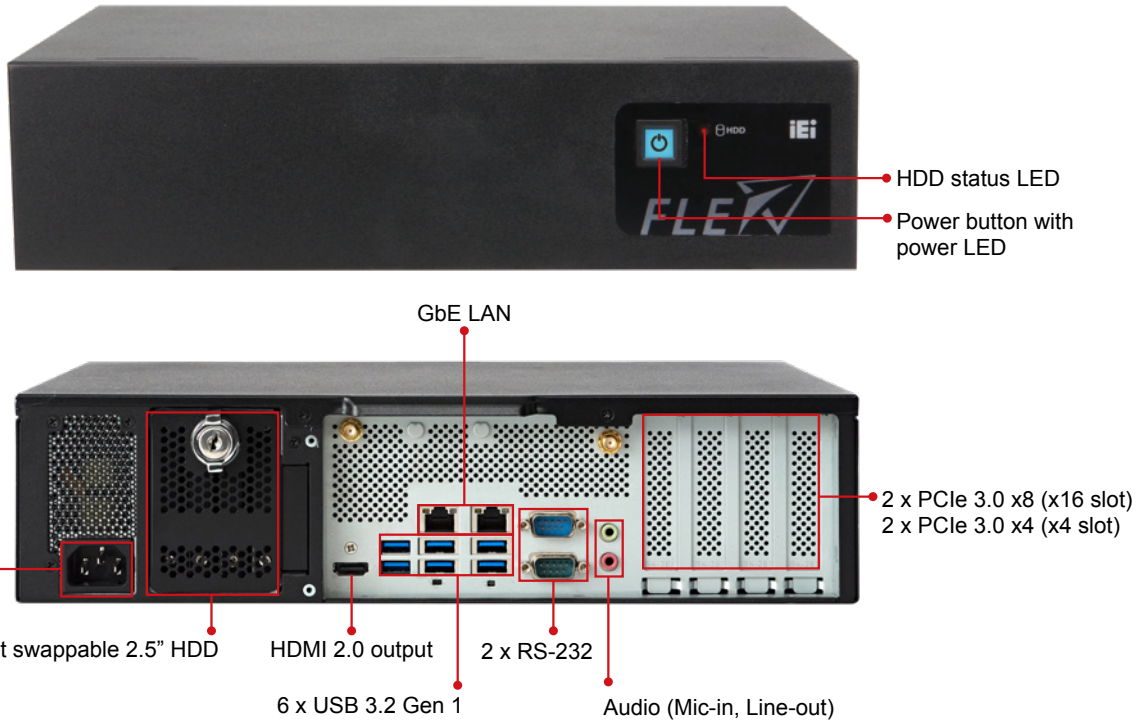

Dimensions *(Unit: mm)*

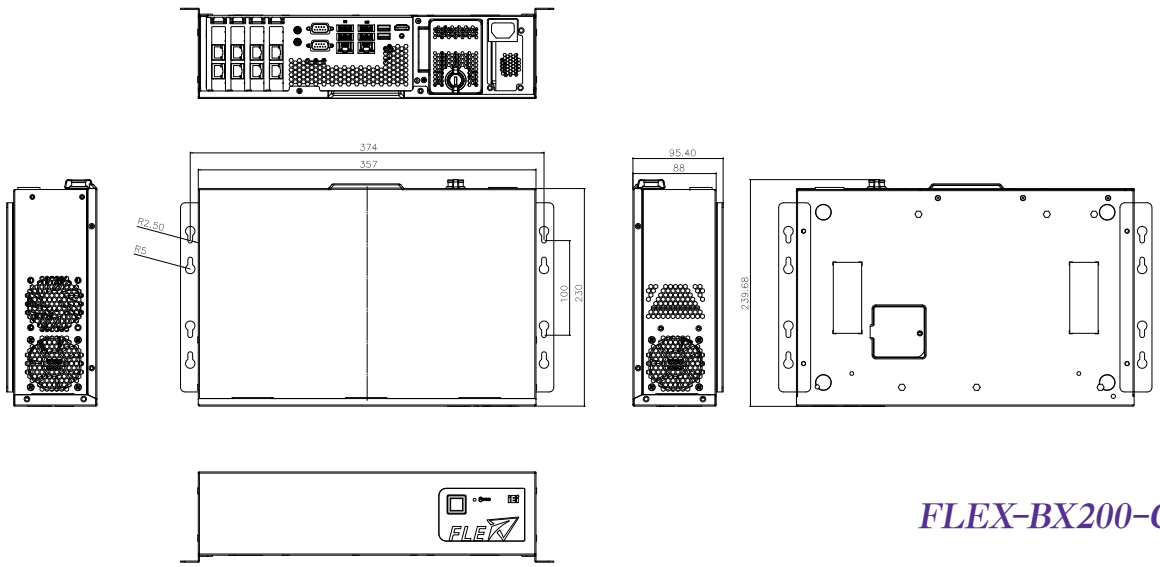

FLEX-BX200-C246

Ordering Information

Part No.	Description
FLEX-BX200-C246-XE/35-R20	2U AI Modular Box PC, Intel® Xeon® E-2176G Processor (6-core, 12-thread, 3.7 GHz), TDP 80W, two PCIe x4 and two PCIe x8 slots, four HDD bays, 350W PSU, R20
FLEX-BX200-Q370-P/35-R20	2U AI Modular Box PC, Intel® Pentium® Gold G5400T Processor (2-core, 4-thread, 3.10 GHz) TDP 35W, two PCIe x4 and two PCIe x8 slots, four HDD bays, 350W PSU, R20
FLEX-BX200-Q370-i3/35-R20	2U AI Modular Box PC, Intel® Core™ i3-8100T Processor (4-core, 4-thread, 3.10 GHz) TDP 35W, two PCIe x4 and two PCIe x8 slots, four HDD bays, 350W PSU, R20
FLEX-BX200-Q370-i5/35-R20*	2U AI Modular Box PC, Intel® Core™ i5-8500T Processor (6-core, 6-thread, 2.1 GHz) TDP 35W, two PCIe x4 and two PCIe x8 slots, four HDD bays, 350W PSU, R20
FLEX-BX200-Q370-i7/35-R20*	2U AI Modular Box PC, Intel® Core™ i7-8700T Processor (6-core, 12-thread, 2.4 GHz) TDP 35W, two PCIe x4 and two PCIe x8 slots, four HDD bays, 350W PSU, R20

Options

Part No.	Description
FLEX-BXRK-R10	Rack mount kit

Packing List

Item	Qty	Remark
32702-000200-100-RS	1	European power cord, 1830mm
41020-0521C2-00-RS	2	wall mount kit, black
44035-040062-RS	4	M4 x 6 oval head screw for wall mount kit, black
	1	Key for HDD cover

FLEX-BX210-Q470/W480

New



Features

- 2U AI PC with 10th Generation LGA 1200 Intel® Core™/Xeon® processor with Intel® Q470/W480 chipset and DDR4 memory
- Four hot-swappable and accessible HDD drive bays support RAID 0/1/5/10
- Support PCIe 3.0 by 4 and PCIe 3.0 by 8 slots
- M.2 2280 PCIe 3.0 x4 NVMe™ SSD support
- Dual independent display with high resolution support
- TPM data protection and reliable authentication
- Support for optional Mustang series PCIe Accelerator Card for offloading AI/DL workloads

Specifications

Model Name		FLEX-BX210-Q470/W480
System	CPU	Intel® Xeon® W-1290TE 1.8GHz (up to 4.5GHz, 10-core, TDP 35W) Intel® 10th Generation Core™ i9-10900TE 1.8GHz (up to 4.5GHz, 10-core, TDP 35W) Intel® 10th Generation Core™ i5-10500TE 2.3GHz (up to 3.7GHz, 6-core, TDP 35W)
	Chipset	Intel® 400 Series Chipsets (Comet Lake)
	Memory	2 x 288-pin 2933/2666 MHz dual-channel DDR4 unbuffered DIMM supporting up to 64GB Xeon W with 32GB RAM Pre-installed Core i9 with 16GB RAM Pre-installed Core i5 with 8GB RAM Pre-installed
	Graphics Engine	Intel® HD Graphics Gen 9.5 Engines with Low power 16 execution unit, supports DX2015, OpenGL 5.X and OpenCL2.x, ES 2.0
	Ethernet	LAN1: Intel® I219LM with Intel® AMT 11.0 supported LAN2/LAN3: Intel® I210 PCIe controller
	Storage	4 x accessible 2.5" HDD/SSD SATA 6 Gb/s bay (with RAID 0/1/5/10 support) with LED indicator 1 x NGFF M.2(2280) M Key socket (support NVMe SSD) Pre-installed 1 x 2.5" 1TB HDD
Wireless Communication	WLAN	Intel® AC 9260 802.11ac, 2.5/5GHz, 2T/2R (by M.2 2230)
	Bluetooth	Bluetooth V5.1
	WWAN and GNSS	M.2 3042 LTE (optional)
I/O Ports and Switches	I/O Ports and Switches	1 x Display port output 1 x HDMI output 1 x Line out 1 x AC inlet 2 x RS-232 DB-9 1 x Mic in
	TPM	TPM 2.0 (pre-installed)
Expansion Slots		2 x PCIe 3.0 x8 2 x PCIe 3.0 x4 1 x M.2 B-Key 2242 socket (with SIM slot for 3G/LTE, supports PCIe 3.0 x1 & USB 3.2 Gen1) 1 x M.2 M-Key 2280 socket (supports PCIe 3.0 x4)
Thermal Solution		3 x System fan, 1 x CPU cooler
Power supply		AC input ATX power supply - 350W Power supply - Input: 90VAC~264VAC, 50/60Hz - Output (max.): 3.3V@14A, 5V@16A, 12V@29A, -12V@0.3A
Watchdog Timer		Software programmable support 1~255 sec. system reset
Construction	Chassis Construction	Metal housing
	Mounting	Wall/Rack mount
	Color	Black
	Dimensions (LxDxH) (mm)	357 x 230 x 88
	Net Weight	4 kgs
Environmental	Operating Temperature	-10°C ~ 50°C
	Storage Temperature	-20°C ~ 60°C
	Operating Humidity	5% ~95%, non-condensing
	Vibration	5~17Hz, 0.1 double amplitude displacement 17~640Hz 1.5G acceleration peak to peak
	Shock	10G acceleration part to part (11ms)
	Safety/EMC	CE/FCC/RoHS

Fully Integrated I/O



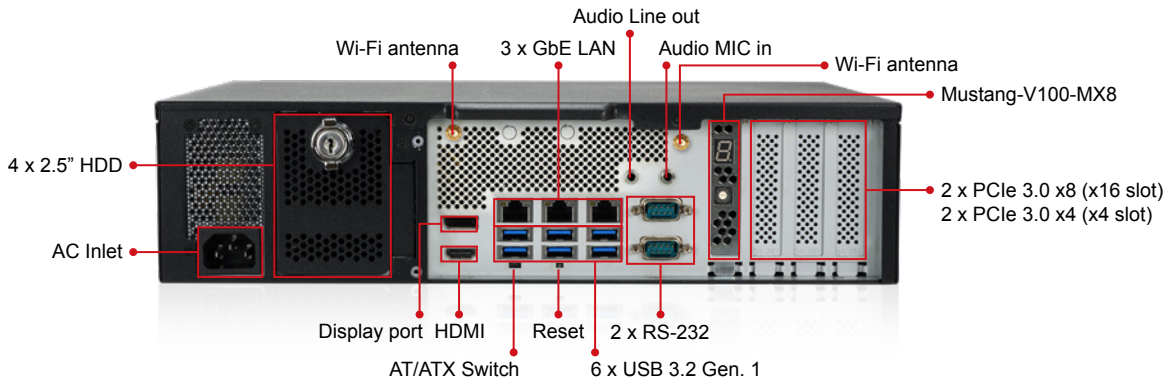

Dimensions *(Unit: mm)*

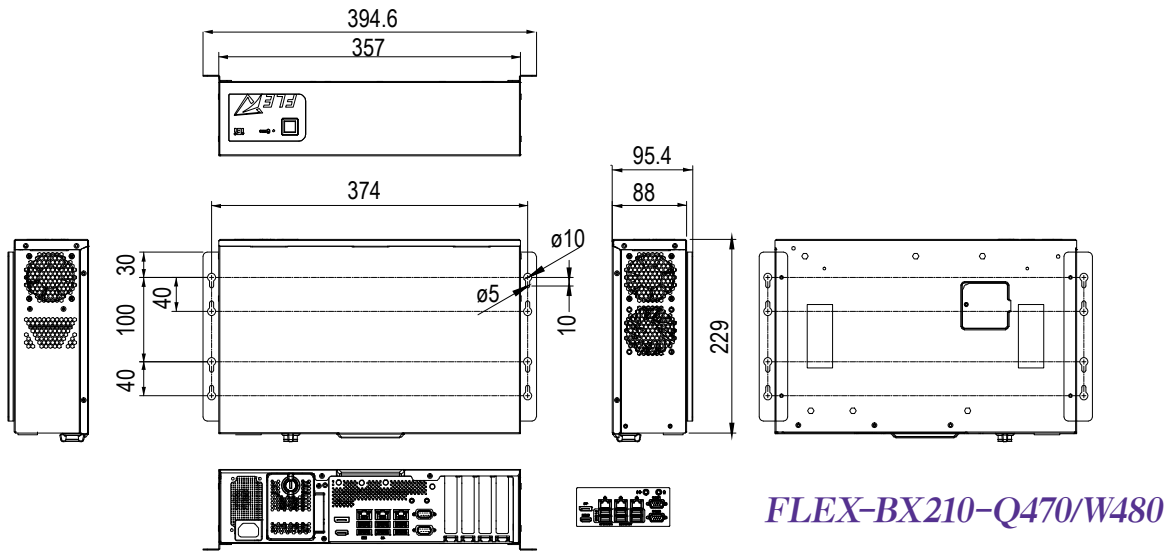

FLEX-BX210-Q470/W480

Ordering Information

Part No.	Description
With Mustang-V100-MX8	
FLEX-BX210AI-XE/32G/V-R10	2U AI Modular box PC, Intel® Xeon® W-1290TE 1.8GHz (up to 4.5GHz, 10-core, TDP 35W), 32GB DDR4, 2.5" 1TB HDD, TPM 2.0, 350W PSU, with Mustang-V100-MX8, Wi-Fi 802.11ac, R10
FLEX-BX210AI-i9/16G/V-R10	2U AI Modular box PC, Intel® 10th Generation Core™ i9-10900TE 1.8GHz (up to 4.5GHz, 10-core, TDP 35W), 16GB DDR4, 2.5" 1TB HDD, TPM 2.0, 350W PSU, with Mustang-V100-MX8, Wi-Fi 802.11ac, R10
FLEX-BX210AI-i5/8G/V-R10	2U AI Modular box PC, Intel® 10th Generation Core™ i5-10500TE 2.3GHz (up to 3.7GHz, 6-core, TDP 35W), 8GB DDR4, 2.5" 1TB HDD, TPM 2.0, 350W PSU, with Mustang-V100-MX8, Wi-Fi 802.11ac, R10
Without Mustang-V100-MX8	
FLEX-BX210AI-XE/32G-R10	2U AI Modular box PC, Intel® Xeon® W-1290TE 1.8GHz (up to 4.5GHz, 10-core, TDP 35W), 32GB DDR4, 2.5" 1TB HDD, TPM 2.0, 350W PSU, Wi-Fi 802.11ac, R10
FLEX-BX210AI-i9/16G-R10	2U AI Modular box PC, Intel® 10th Generation Core™ i9-10900TE 1.8GHz (up to 4.5GHz, 10-core, TDP 35W), 16GB DDR4, 2.5" 1TB HDD, TPM 2.0, 350W PSU, Wi-Fi 802.11ac, R10
FLEX-BX210AI-i5/8G-R10	2U AI Modular box PC, Intel® 10th Generation Core™ i5-10500TE 2.3GHz (up to 3.7GHz, 6-core, TDP 35W), 8GB DDR4, 2.5" 1TB HDD, TPM 2.0, 350W PSU, Wi-Fi 802.11ac, R10

Packing List

1 x Mounting Bracket	2 x Wi-Fi Antennas
1 x Power Cord	1 x QSG

Hardware Features

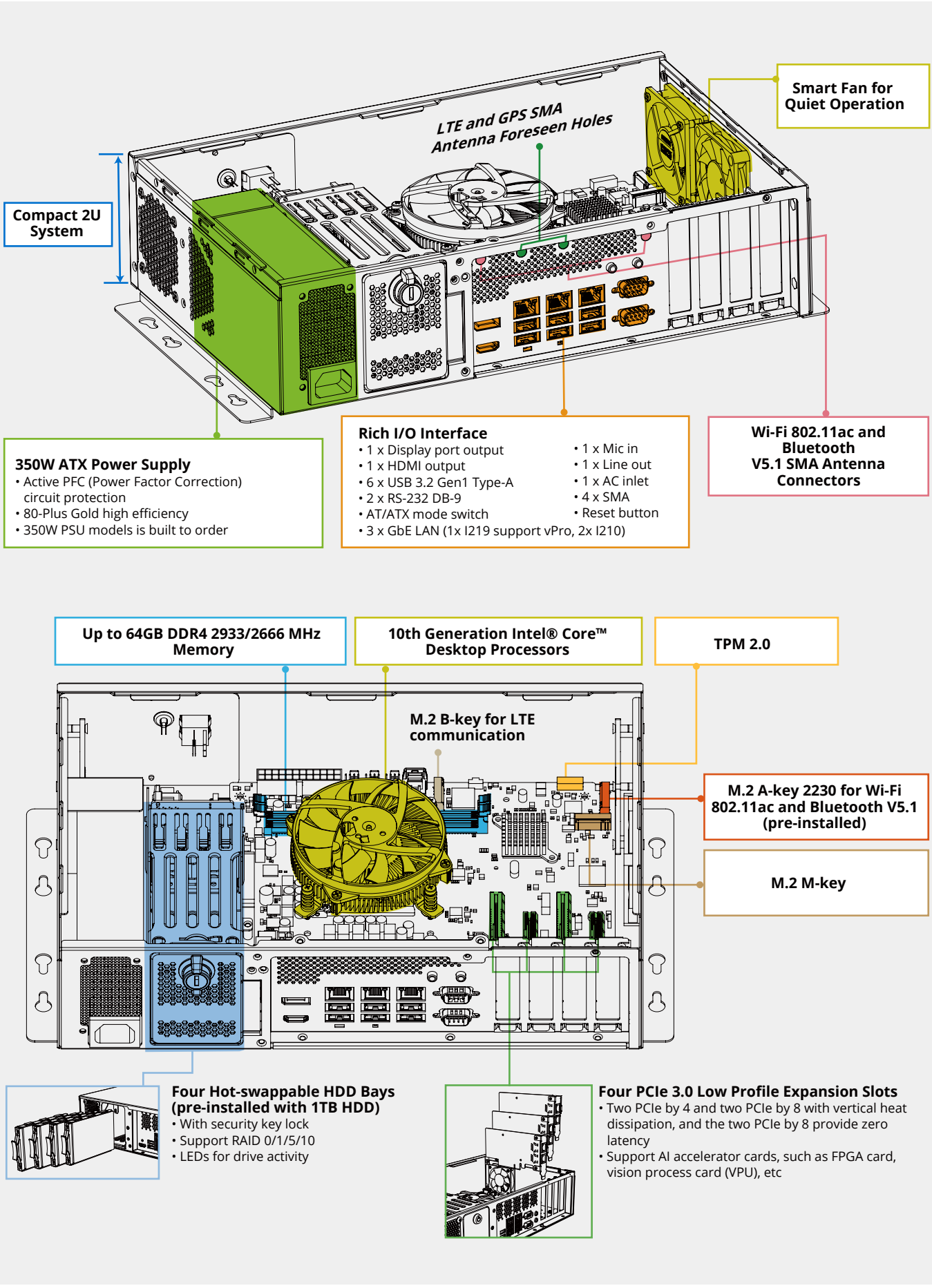

Industrial Automation Solution

IEI offers complete rugged fanless products with a wide range of I/O interfaces and multiple expansion, allowing users to connect to different devices for comprehensive automation solution. IEI's industrial automation solution provides a reliable platform to fulfill a wide variety of application demand, such as machine automation, surveillance application, and information kiosk. "TANK" is a model name for a series of IEI ruggedize embedded box products.

Ruggedized Solution





■ TANK 800 Series

Multiple Expansion Slot

- Great flexibility of expansion slots
- Design fulfills high storage demand
- Wide range temperature



■ TANK 600 Series

Multiple Serial Port

- Support up to 8 COM ports
- Support multiple types storage device
- Wide range temperature
- Low power consumption

TANK Series Selection Guide

The TANK series contains great coverage of the Intel® desktop, mobile and Atom™ solutions. From high performance to low power consumption, IEI provides a vast series of specifications to fulfill the diverse demands of our customers.



Platform		Multiple PCI/ PCIe Expansion	Multiple PCIe Mini	Multiple COM Port
Desktop	Coffee Lake/ Coffee Lake-R	TANK-880-Q370	-	-
	Skylake/ Kaby Lake	TANK-870-Q170 TANK-870e-H110	TANK-871	-
Atom®	Braswell	-	-	TANK-610-BW

A Variety of Applications

IEI TANK ruggedized embedded box series is ideal for applications that require remote control or multiple video outputs. Furthermore, with the IEI iRIS technology, the users can achieve Internet of Things (IoT) among different devices, such as panel PCs and single board computers.



Key Features

■ Fanless design



The advantage of IEI fanless product series is to reduce the failure caused by fan and maintenance efforts. The functional heatsink is implemented to make sure the products can work in harsh environments.

■ Wide range temperature



IEI fanless product series has leading-edge thermal design, and has been tested under extreme temperature environments in order to ensure that IEI fanless products can be operated in any harsh environment.

■ Wide range power input



The 9 V ~ 36 V DC wide power input allows the TANK series to be used in different applications. IEI provides you safe and reliable operations under industrial conditions with a wide range of acceptable inputs.

■ Multiple LAN ports design



LAN port features inexpensive, highly reliable and easy to install and maintain. Therefore, our new products are equipped with triple LAN ports, supporting high speed communication between devices and easy to segment into intranet and extranet for security.

■ EMC & safety certifications

FC
CE

IEI TANK series has been CE and FCC certified, which proves that we give top priority to quality control and inspection of all our products.

■ Multiple expansion slots

The TANK Series integrate multiple expansion such as PCIe/PCI slots and PCIe mini/M.2 card slots. Users could install the card they need such as graphics card, capture card, I/O card, PoE or AI accelerator card to enhance system function and performance, and it allows system to be customized, upgraded and repaired for faster time to market.

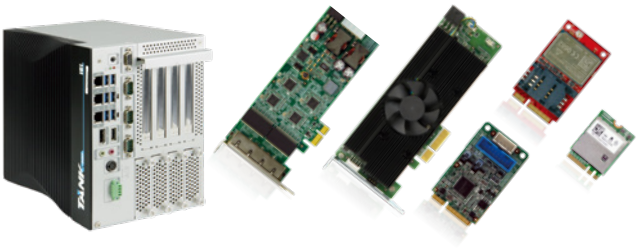

Industrial Automation System



New





Model Name		TANK-880-Q370	TANK-871-Q170	TANK-870-Q170
Chassis	Color	Black C + Silver	Black C + Silver	Black C + Silver
	Dimensions (WxDxH) (mm)	169 x 255.2 x 225	82.2 x 255.2 x 204	2-slot: 121.5 x 255.2 x 205 4-slot: 154.8 x 255.2 x 205
	System Fan	Fanless	Fanless	Fanless
	Chassis Construction	Extruded aluminum alloys	Extruded aluminum alloys	Extruded aluminum alloys
Motherboard	CPU	8th Gen Intel® Core™ CPU & Intel® Core™ i7-9700TE 1.8GHz (up to 3.8GHz, 8-core, TDP 35W) Intel® Core™ i5-9500TE 2.2GHz (up to 3.6GHz, 6-core, TDP 35W)	7th Gen Intel® Core™ CPU & Intel® Core™ i7-6700TE 2.4 GHz (up to 3.4GHz, quad-core, TDP 35) Intel® Core™ i5-6500TE 2.3 GHz (up to 3.3GHz, quad-core, TDP 35)	
	Chipset	Intel® Q370	Intel® Q170	Intel® Q170
	System Memory	2 x SO-DIMM DDR4 2666/ 2400 (8GB pre-installed) (up to 64GB)	2 x SO-DIMM DDR4 2666 (4GB pre-installed) (up to 32GB)	2 x SO-DIMM DDR4 2666 (4GB pre-installed) (up to 32GB)
IPMI	iRIS Solution	N/A	1 x iRIS-2400 (optional)	1 x iRIS-2400 (optional)
Storage	Hard Drive	4 x 2.5" SATA 6Gb/s HDD/SSD bay (RAID 0/1/5/10 support)	2 x 2.5" SATA 6Gb/s HDD/SSD bay (RAID 0/1 support)	2 x 2.5" SATA 6Gb/s HDD/SSD bay (RAID 0/1 support)
I/O Interfaces	USB	6 x USB 3.2 Gen1	4 x USB 3.2 Gen 1 4 x USB 2.0	4 x USB 3.2 Gen 1 4 x USB 2.0
	Ethernet	3 x RJ-45: 1 x GbE by Intel® I219 2 x GbE by Intel® I210	2 x RJ-45: LAN1: GbE by Intel® I219LM LAN2 (iRIS): GbE by Intel® I210	2 x RJ-45: LAN1: GbE by Intel® I219LM LAN2 (iRIS): GbE by Intel® I210
	COM Port	3 x RS-232/422/485 with AFC (DB-9 with 2.5kV isolation)	2 x RS-232/422/485 with AFC (DB-9) 4 x RS-232 (2 x RJ-45, 2 x DB-9 with 2.5kV isolation)	2 x RS-232/422/485 with AFC (DB-9) 4 x RS-232 (2 x RJ-45, 2 x DB-9 with 2.5kV isolation)
	Digital I/O	8-bit Digital I/O (4-in/ 4-out)	8-bit Digital I/O (4-in/ 4-out)	8-bit Digital I/O (4-in/ 4-out)
	Display	1 x HDMI (up to 3840x2160@30Hz) 1 x DP (up to 4096×2304@60Hz)	1 x VGA (up to 1920 x 1200@60Hz) 1 x HDMI/DP (up to 3840x2160@30Hz/4096×2304@60Hz) 1 x iDP (optional)	1 x VGA (up to 1920 x 1200@60Hz) 1 x HDMI/DP (up to 3840x2160@30Hz/4096×2304@60Hz) 1 x iDP (optional)
	Audio	1 x Line-out, 1 x Mic-in	1 x Line-out, 1 x Mic-in	1 x Line-out, 1 x Mic-in
	Wireless	1 x 802.11a/b/g/n/ac (optional)	1 x 802.11 a/b/g/n/ac (optional)	1 x 802.11 a/b/g/n/ac (optional)
	TPM	1 x TPM 2.0 (2 x 10 pin) (optional)	1 x TPM 2.0 (2 x 10 pin) (optional)	1 x TPM 2.0 (2 x 10 pin) (optional)
Expansions	PCIe Mini	1 x Full-size (PCIe/ USB 2.0/ SATA)	1 x Half-size (PCIe/ USB 2.0) 1 x Full-size (PCIe/ USB 2.0/ SATA)	1 x Half-size (PCIe/ USB 2.0) 1 x Full-size (PCIe/ USB 2.0/ SATA)
	M.2	1 x 2230 A-key (PCIe x2/USB2.0) 2 x 2280 M-key (PCIe x2)	N/A	N/A
	Backplane	1 x PCIe x16 1 x PCIe x1 2 x PCIe x4	N/A	2-slot model: 1 x PCIe x16, 1 x PCI 2-slot model: 2 x PCIe x8 4-slot model: 2 x PCIe x8, 2 x PCI, 1 x Full-size PCIe Mini (PCIe/USB2.0) 4-slot model: 1 x PCIe x16, 3 x PCI, 1 x Full-size PCIe Mini (PCIe/ USB 2.0)
Power	Power Input	DC Jack: 9 ~ 36V DC Terminal Block: 9 ~ 36V DC	DC Jack: 9 ~ 36V DC Terminal Block: 9 ~ 36V DC	DC Jack: 9 ~ 36V DC Terminal Block: 9 ~ 36V DC
	Power Consumption	19V@3.6A (Intel® Core™ i7-8700T with 8GB memory)	19V@3.68 A (Intel® Core™ i7-6700TE with 8 GB memory)	19V@3.68 A (Intel® Core™ i7-6700TE with 8 GB memory)
	Internal Power Connector	12V@10A	5V@3A or 12V@3A	5V@3A or 12V@3A
Reliability	Mounting	Wall mount	Wall mount	Wall mount
	Operating Temperature	-20°C ~ 60°C with air flow (SSD), 10% ~ 95% non-condensing	i7-6700TE: -20°C ~ 45°C with air flow (SSD), 10% ~ 95% non-condensing i5-6500TE: -20°C ~ 60°C with air flow (SSD), 10% ~ 95% non-condensing	i7-6700TE: -20°C ~ 45°C with air flow (SSD), 10% ~ 95% non-condensing i5-6500TE: -20°C ~ 60°C with air flow (SSD), 10% ~ 95% non-condensing
	Operating Shock	Half-sine wave shock 5G, 11ms, 100 shocks per axis (SSD)	Half-sine wave shock 5G, 11ms, 100 shocks per axis (SSD)	Half-sine wave shock 5G, 11ms, 100 shocks per axis (SSD)
	Operating Vibration	MIL-STD-810G 514.6C-1 (SSD)	MIL-STD-810G 514.6 C-1 (SSD)	MIL-STD-810G 514.6 C-1 (SSD)
	Weight (Net/Gross)	5.4 kg/8.45 kg	3.5 kg/4.5 kg	2-slot: 4.2 kg/6.3 kg 4-slot: 4.5 kg/6.5 kg
	Safety/EMC	CE/FCC	CE/FCC/KC	CE/FCC/KC
OS	Supported OS	Microsoft® Windows 10, Linux	Microsoft® Windows® 8 Embedded, Microsoft® Windows® Embedded Standard 7 E, Microsoft® Windows® 10 IoT Enterprise	

Industrial Automation System





Model Name		TANK-870e-H110	TANK-610-BW
Chassis	Color	Dark silver purple + Silver	Black C + Silver
	Dimensions (WxDxH) (mm)	132.6 x 255.2 x 190	184 x 200.6 x 58.2
	System Fan	Fanless	Fanless
	Chassis Construction	Extruded aluminum alloys	Extruded aluminum alloys
Motherboard	CPU	7th Gen Intel® Core™ CPU & Intel® Core™ i7-6700TE 2.4 GHz (up to 3.4GHz, quad-core, TDP 35) Intel® Core™ i5-6500TE 2.3 GHz (up to 3.3GHz, quad-core, TDP 35)	Intel® Celeron® N3160 1.6 GHz (up to 2.24GHz, quad-core, TDP 6W)
	Chipset	Intel® H110	SoC
	System Memory	2 x SO-DIMM DDR4 2666 (4GB pre-installed)(up to 32GB)	2 x DDR3L SO-DIMM (2GB pre-installed)(up to 8GB)
Storage	Hard Drive	2 x 2.5" SATA 6Gb/s HDD/SSD bay	1 x 2.5" SATA 6Gb/s HDD/SSD Bay
I/O Interfaces	USB	4 x USB 3.2 Gen1	4 x USB 3.2 Gen1
	Ethernet	2 x RJ-45: 2 x GbE by RTL8111G	2 x RJ-45: 2 x GbE by Intel® I210
	COM Port	2 x RS-232/422/485 with AFC (DB-9 with 2.5kV isolation)	2 x RS-232/422/485 with AFC 6 x RS-232
	Digital I/O	N/A	N/A
	Display	1 x VGA (up to 1920 x 1200@60Hz) 1 x HDMI (up to 3840 x 2160@30Hz)	1 x VGA (up to 1920 x 1200@60Hz) 1 x HDMI (up to 3840 x 2160@30Hz)
	Audio	1 x Line-out, 1 x Mic-in	1 x Line-out, 1 x Mic-in
	Wireless	1 x 802.11a/b/g/n/ac (optional)	1 x 802.11a/b/g/n/ac (optional)
	TPM	N/A	N/A
Expansions	PCIe Mini	1 x Full-size (PCIe/ USB 2.0) 1 x Full-size (PCIe/ USB 2.0/ SATA)	1 x Half-size (PCIe/USB 2.0) 1 x Full-size (PCIe/SATA)
	M.2	N/A	N/A
	Backplane	3A: 1 x PCIe x16, 2 x PCI 3B: 1 x PCIe x16, 1 x PCIe x4, 1 x PCI 3C: 3 x PCI	N/A
Power	Power Input	DC Jack: 9 ~ 36V DC Terminal Block: 9 ~ 36V DC	DC Jack: 9 ~ 36V DC Terminal Block: 9 ~ 36V DC
	Power Consumption	19V@3.44A (Intel® Core™ i7-6700TE with 8GB memory)	12V@1.49A (Intel® Celeron® N3160 with 4GB DDR3L memory)
Reliability	Mounting	Wall mount & Din Rail	Wall mount, VESA 100
	Operating Temperature	-20ºC ~ 50°C with air flow (SSD), 10% ~ 95% non-condensing	-40ºC ~ 60°C with air flow(SSD), 10% ~ 95% non-condensing
	Operating Shock	Half-sine wave shock 5G, 11ms, 100 shocks per axis (SSD)	Half-sine wave shock 5G, 11ms, 100 shocks per axis (SSD)
	Operating Vibration	MIL-STD-810G 514.6C-1 (SSD)	MIL-STD-810G 514.6C-1 (SSD)
	Weight (Net/Gross)	2.8 kg/4.3 kg	2.2 kg/3 kg
	Safety/EMC	CE/FCC/KC	CE/FCC/KC
OS	Supported OS	Microsoft® Windows® 8 Embedded, Microsoft® Windows® Embedded Standard 7 E, Microsoft® Windows® 10 IoT Enterprise	Microsoft® Windows 8 Embedded, Microsoft® Windows® Embedded Standard 7 E

TANK-880-Q370

- *High-Performance 8th/9th Generation Intel® Core™ Processor*
- *Fanless Embedded Computer*

New

Features

- 8th/9th Gen Intel® Core™ processor platform with Intel® Q370 chipset and DDR4 memory
- Dual independent displays with high resolution support
- Rich high-speed I/O interfaces
- On-board internal power connector for providing power to add-on cards
- Four accessible 2.5” HDD/SSD SATA 6 Gb/s bay (with RAID 0/1/5/10 support)
- Great flexibility for hardware expansion



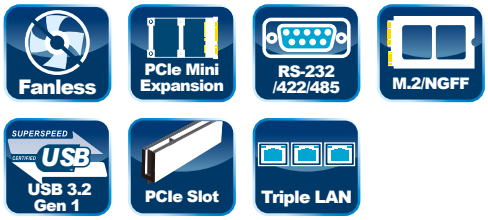

Specifications

Model Name		TANK-880-Q370
Chassis	Color	Black C + Silver
	Dimensions(WxDxH) (mm)	169 x 255.2 x 225
	System Fan	Fanless
	Chassis Construction	Extruded aluminum alloys
Motherboard	CPU	8th Gen Intel® Core™ CPU & Intel® Core™ i7-9700TE 1.8GHz (up to 3.8GHz, 8-core, TDP 35W) Intel® Core™ i5-9500TE 2.2GHz (up to 3.6GHz, 6-core, TDP 35W)
	Chipset	Intel® Q370
	System Memory	2 x SO-DIMM DDR4 2666/2400 (8GB pre-installed)(up to 64GB)
Storage	Hard Drive	4 x 2.5" HDD/SSD SATA 6Gb/s bay (with RAID 0/1/5/10 support)
I/O Interfaces	USB	6 x USB 3.2 Gen1
	Ethernet	3 x RJ-45: 1 x GbE by Intel® I219 2 x GbE by Intel® I210
	COM Port	3 x RS-232/422/485 with AFC (DB-9 with 2.5kV isolation)
	Digital I/O	8-bit Digital I/O (4-in/ 4-out)
	Display	1 x HDMI 1.4b (up to 3840 x 2160@30Hz) 1 x DP (up to 4096 x 2304@60Hz)
	Audio	1 x Line-out, 1 x Mic-in
	TPM 2.0	1 x TPM 2.0 (2 x 10 pin)(optional)
Expansions	PCIe Mini	1 x Full-size (PCIe/ USB 2.0/ SATA)
	M.2	1 x 2230 A-key (PCIe x2/USB2.0) 2 x 2280 M-key (PCIe x2)
	Backplane	1 x PCIe by 16, 1 x PCIe by 1, 2 x PCIe by 4
Power	Power Input	DC Jack: 9 ~ 36V DC Terminal Block: 9 ~ 36V DC
	Power Consumption	19V @ 5.4A (Intel® Core™ i7-9700TE with 8GB memory)
	Internal Power Output	12V @ up to 10A
Reliability	Mounting	Wall mount
	Operating Temperature	-20ºC ~ 60°C with air flow (SSD), 10% ~ 95% non-condensing
	Storage Temperature	-40ºC ~ 85°C with air flow (SSD), 10% ~ 95% non-condensing
	Operating Shock	Half-sine wave shock 5G, 11ms, 100 shocks per axis (SSD)
	Operation Vibration	MIL-STD-810G 514.6C-1 (SSD)
	Weight (Net/Gross)	5.4 kg/8.45 kg
	Safety / EMC	CE/FCC
	Watchdog timer	Programmable 1 ~ 255 sec/min
OS	Supported OS	Microsoft® Windows® 10 IoT Enterprise/ Linux

Fully Integrated I/O

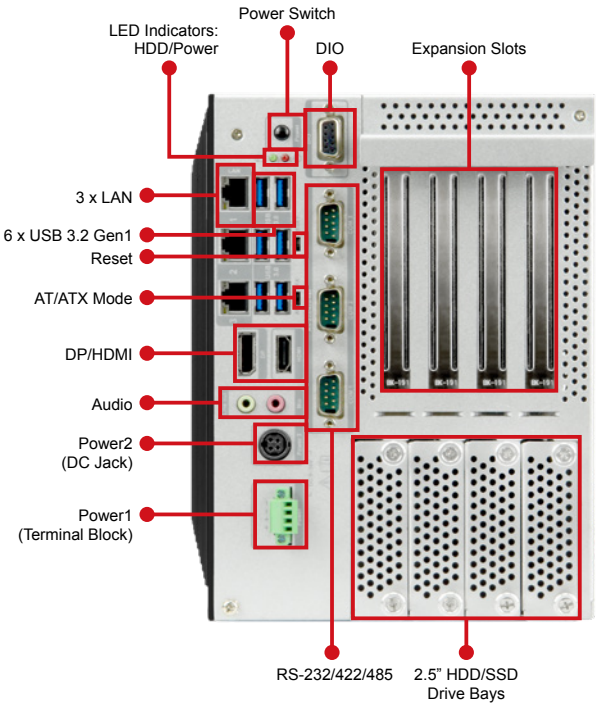

Dimensions (Unit: mm)

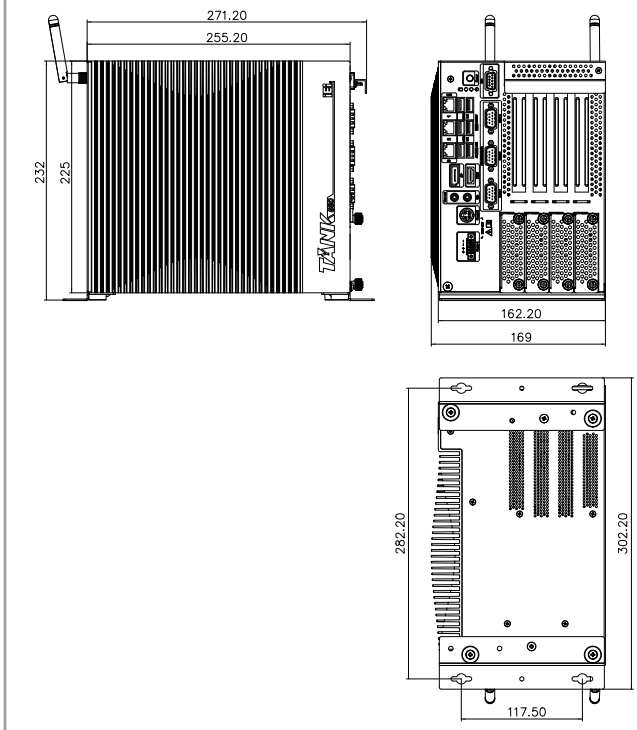

TANK-880-Q370

Ordering Information

Part No.	Description
TANK-880-Q370-i7R/8G/4A-R10	Ruggedized fanless embedded system with Intel® i7-9700TE 1.8GHz, (up to 3.8GHz, 8-core, TDP 35W), 8GB DDR4 pre-installed memory, 1 x PCIe by 16 & 2 x PCIe by 4 & 1 x PCIe by 1 expansion, HDMI/DP, 9 ~ 36V DC, RoHS
TANK-880-Q370-i5R/8G/4A-R10	Ruggedized fanless embedded system with Intel® i5-9500TE 2.2GHz, (up to 3.6GHz, 6-core, TDP 35W), 8GB DDR4 pre-installed memory, 1 x PCIe by 16 & 2 x PCIe by 4 & 1 x PCIe by 1 expansion, HDMI/DP, 9 ~ 36V DC, RoHS

Options

Part No.		Description
Wi-Fi Module	27319-000009-RS*	Wireless Lan Module;Wireless LAN & Bluetooth M.2 Module;Sparklan;R9701810011;IEEE802.11a/b/g/n/ac;2.412GHz~2.4835GHz, 5.15GHz~5.85GHz;M.2 2230;.;3.3V;22*30*2.15mm;QCNFA364A;QCA6174A-5;2x2 MIMO;Dual Band;WCBN808A-Q2;CCL;CCL;RoHS
Antenna	32505-000900-100-RS*	External Antenna; WLAN; RG 178; 108MM; TANK-700-QM67-R10; PEAK GAIN 2.0DBI; Exceltek; 2.4-2.5GHz/5.15-5.85GHz; REVERSE SMA PLUG; RoHS
RF Cable	32501-004000-100-RS*	RF; RF CABLE; LINE DIAMETER:0.81mm; 250MM;;; 50Ω; Sparklan; 0-6GHz; VSWR≤1.3; I-PEX MHF-4 Plug; REVERSE SMA JACK; NUT x 1; WASHER x 1;; RoHS
Adapter	63040-010150-700-RS	Adapter Power; FSP; FSP150-ABAN3; 9NA1504811; Active PFC; Vin:90 ~ 264VAC; 150W; Dim:75.6*151.3*25.4mm; Plug=6.5mm; Cable=1500mm; Erp(NO LOAD 0.15W); Vout:19VDC; Din 4Pin/lock; CCL; RoHS
Power Cord	32000-000002-RS	European power cord
TPM 2.0 Module	TPM-IN02-R20	20-pin Infineon TPM2.0 module, software mangement tool, firmware v5.5
System Fan	31100-000440-RS	FAN;+12V;4PIN;Everflow;92*92*25mm;3600RPM;TWO BALL BEARING;LINE LENGTH:180MM;4.4+/-0.3MM;F129025BU;F129025BUAFW30 aR;AXIAL FAN;WITH FRAME;73.29CFM;11.4~12.6V;44dB;70000hur;TUV, UL, CE;CCL;RoHS
OS:Windows Embedded 10	TANK-880-Q370-W10E64-H-R10	OS Image with Windows® Embedded Standard 10 E High End 64-bit 2019 for TANK-880-Q370-i7 Series, with DVD-ROM, RoHS
OS:Windows Embedded 10	TANK-880-Q370-W10E64-V-R10	OS Image with Windows® Embedded Standard 10 E Value 64-bit 2019 for TANK-880-Q370-i5 Series, with DVD-ROM, RoHS

* Each Wi-Fi module needs two antennas and two RF cables to fully support Wi-Fi function.

Packing List

1 x Chassis Screw	1 x Wall Mount Bracket

TANK-871-Q170

- *High-Performance 6th/7th Generation Intel® Core™ Processor*
- *Fanless Embedded Computer*

Features

- 6th/7th Gen Intel® Core™ processor platform with Intel® Q170 chipset and DDR4 memory
- Triple independent display with high resolution support
- Rich high-speed I/O interfaces on one side for easy installation
- IEI iRIS-2400 solution



Specifications

Model Name		TANK-871-Q170
Chassis	Color	Black C + Silver
	Dimensions (WxDxH) (mm)	82.2 x 255.2 x 204
	System Fan	Fanless
	Chassis Construction	Extruded aluminum alloy
Motherboard	CPU	7th Gen Intel® Core™ CPU & Intel® Core™ i7-6700TE 2.4 GHz (up to 3.4GHz, quad-core, TDP 35) Intel® Core™ i5-6500TE 2.3 GHz (up to 3.3GHz, quad-core, TDP 35)
	Chipset	Intel® Q170
	System Memory	2 x SO-DIMM DDR4 2666 (4GB pre-installed) (up to 32GB)
IPMI	iRIS solution	1 x iRIS-2400 (optional)
Storage	Hard Drive	2 x 2.5'' SATA 6Gb/s HDD/SSD bay (RAID 0/1 support)
I/O Interfaces	USB	4 x USB 3.2 Gen 1 4 x USB 2.0
	Ethernet	2 x RJ-45: LAN1: GbE by Intel® I219LM LAN2 (iRIS): GbE by Intel® I210
	COM Port	2 x RS-232/422/485 with AFC (DB-9) 4 x RS-232 (2 x RJ-45, 2 x DB-9 with 2.5kV isolation)
	Digital I/O	8-bit Digital I/O (4-in/ 4-out)
	Display	1 x VGA (up to 1920 x 1200@60Hz) 1 x HDMI/DP (up to 3840 x 2160@30Hz /4096×2304@60Hz) 1 x iDP (optional)
	Audio	1 x Line-out, 1 x Mic-in
	Wireless	1 x 802.11a/b/g/n/ac (optional)
Expansions	PCIe Mini	1 x Half-size (PCIe/ USB 2.0) 1 x Full-size (PCIe/ USB 2.0/ SATA)
Power	Power Input	DC Jack: 9 ~ 36V DC Terminal Block: 9 ~ 36V DC
	Power Consumption	19V@3.68A (Intel® Core™ i7-6700TE with 8GB memory)
Reliability	Mounting	Wall mount
	Operating Temperature/Humidity	i7-6700TE: -20ºC ~ 45°C with air flow (SSD), 10% ~ 95% non-condensing i5-6500TE: -20ºC ~ 60°C with air flow (SSD), 10% ~ 95% non-condensing
	Storage Temperature/Humidity	-40ºC ~ 85°C with air flow (SSD), 10% ~ 95% non-condensing
	Operating Shock	Half-sine wave shock 5G, 11ms, 100 shocks per axis (SSD)
	Operating Vibration	MIL-STD-810G 514.6 C-1 (SSD)
	Weight (Net/Gross)	3.5 kg/4.5 kg
	Safety/EMC	CE/FCC/KC
OS	Supported OS	Microsoft® Windows® 8 Embedded, Microsoft® Windows® Embedded Standard 7 E, Microsoft® Windows® 10 IoT Enterprise

Fully Integrated I/O

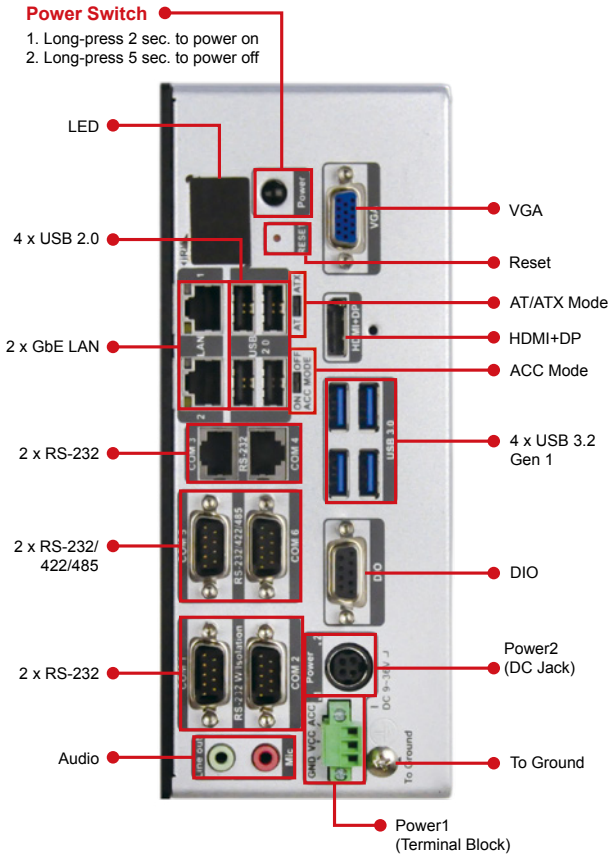

Dimensions (Unit: mm)

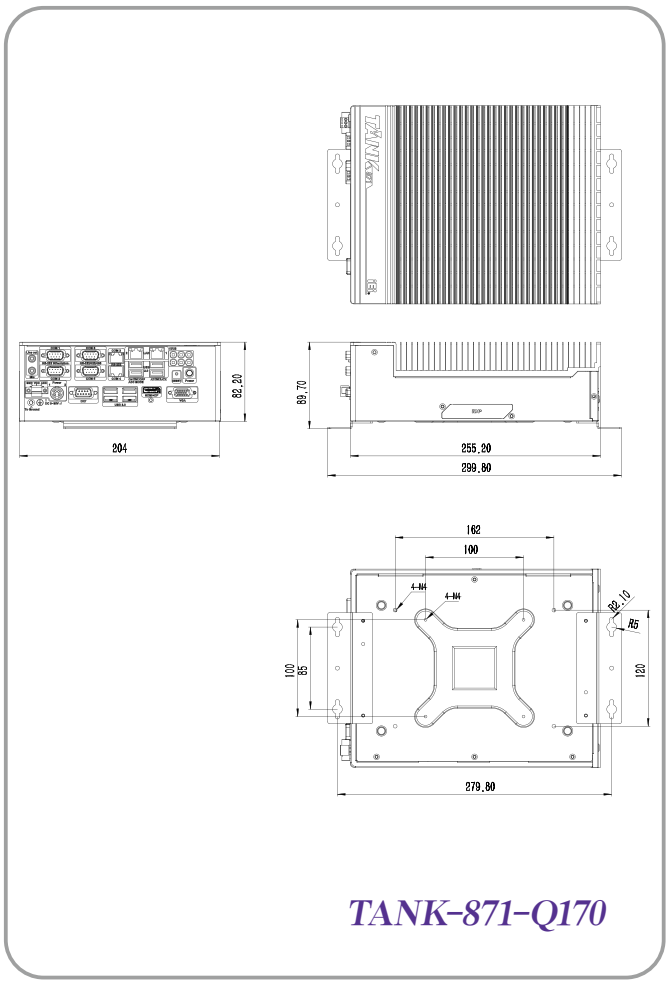

TANK-871-Q170

Ordering Information

Part No.	Description
TANK-871-Q170i-i7/4G-R10	Ruggedized fanless embedded system with Intel® Core™ i7-6700TE 2.4 GHz (up to 3.4 GHz, quad core, TDP 35W), 4GB DDR4 pre-installed memory, VGA/HDMI+DP/iDP, iRIS-2400 optional, 9 ~ 36V DC, RoHS
TANK-871-Q170i-i5/4G-R10	Ruggedized fanless embedded system with Intel® Core™ i5-6500TE 2.3 GHz (up to 3.3 GHz, quad core, TDP 35W), 4GB DDR4 pre-installed memory, VGA/HDMI+DP/iDP, iRIS-2400 optional, 9 ~ 36V DC, RoHS

Options

Part No.	Description
32000-000002-RS	European power cord
63040-010120-300-RS	Adapter Power;FSP;FSP120-AHAN3;9NA1206708;Active PFC;Vin:90 ~ 264VAC;120W;Dim:75.6*151.3*25.4mm;Plug=6.5mm;Cable=1500mm;Erp(NO LOAD 0.15W);Vout:12VDC;Din 4Pin/lock;CCL;RoHS
iRIS-2400-R10	IPMI 2.0 adapter card with AST2400 BMC chip for DDR3 SO-DIMM socket interface
EMB-WIFI-KIT01-R20	1T1R wifi module kit for embedded system, IEEE802.11a/b/g/n/ac WiFi with Bluetooth 4.0/3.0+HS, 1 x wifi module, 2 x 250mm RF cable, 2 xAntenna, RoHS
E-MPCIE-DLAN-R10	PCIe Mini card supports 2-port GbE with Intel I211 controller, with PMS 194C I/O bracket and 250mm cable
E-MPCIE-LAN-R10	PCIe Mini card supports 1-port GbE with Realtek RTL8111E controller, with PMS 194C I/O bracket and 250mm cable
E-MPCIE-UART-KIT01-R10	PCI Express Mini supports quad RS-232/422/485 port module
TANK-870-Q170-WES7E64-R10	OS Image with Windows® Embedded Standard 7 E 64-bit for TANK-870-Q170 Series, with DVD-ROM, RoHS
TANK-870-Q170-W10E64-H-R10	OS Image with Windows® Embedded Standard 10 E High End 64-bit for TANK-870-Q170-i7 Series, with DVD-ROM, RoHS
TANK-870-Q170-W10E64-V-R10	OS Image with Windows® Embedded Standard 10 E Value 64-bit for TANK-870-Q170-i5 Series, with DVD-ROM, RoHS

Packing List

1 x Chassis Screw	1 x Mounting Bracket

TANK-870-Q170

- *High-Performance 6th/7th Generation Intel® Core™ Processor*
- *Fanless Embedded Computer*

Features

- 6th/7th Gen Intel® Core™ processor platform with Intel® Q170 chipset and DDR4 memory
- Triple independent display with high resolution support
- Rich high-speed I/O interfaces on one side for easy installation
- On-board internal power connector for providing power to add-on cards
- Great flexibility for hardware expansion

QTS-Gateway | IPMI 2.0 Compliant | Fanless | Triple Display | PCI/PCIe Expansion | DDR4 2133



Smart Choice for Surveillance System

The TANK-870-Q170 integrated with IEI PoE Ethernet port expansion card can be used as a surveillance system for factory and public security. IEI PoE expansion card can support up to four PoE IEEE802.3af ports (max. 15.4 W per port) by PCIe x4.

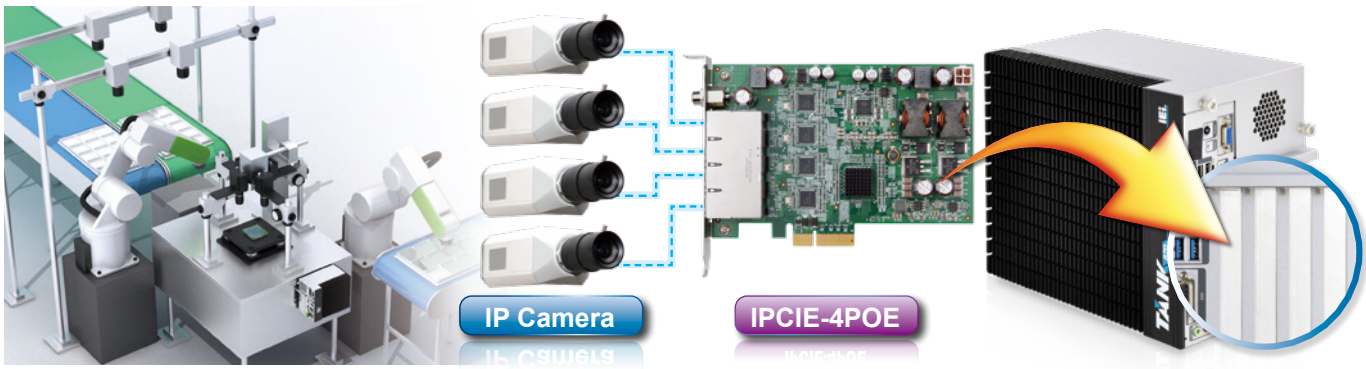

5V@3A or 12V@3A Internal Power Connector

The TANK-870-Q170 provides the most convenient 4-pin internal power connector for add-on card usage, adding more flexibility to the embedded system in industrial environment.

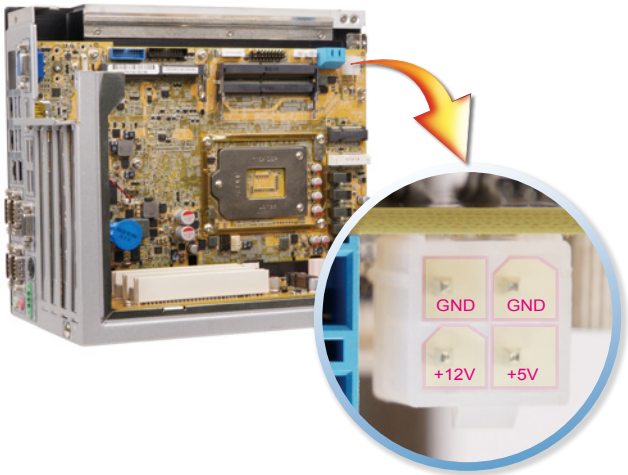

Fully Integrated I/O

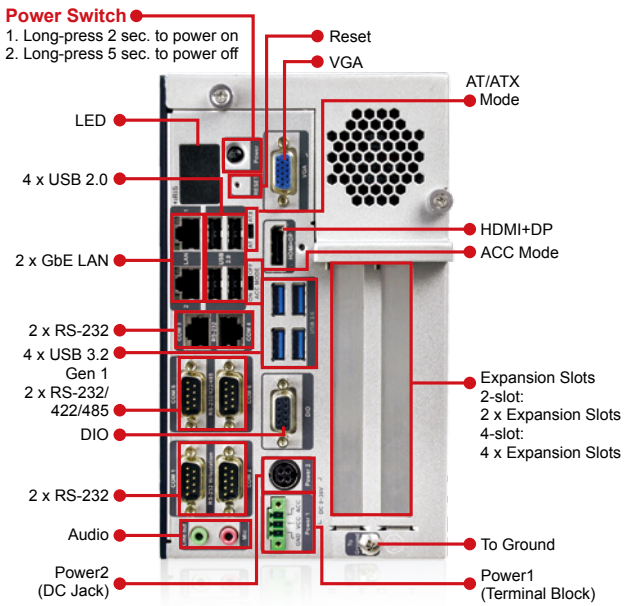

Flexible Expansion Interface

Backplane	TANK-870-Q170i-2A	TANK-870-Q170i-2B	TANK-870-Q170i-4A		TANK-870-Q170i-4B	
Slot Type	PCIe x16	PCIe x16	PCIe x16	PCIe x16	PCIe x16	PCI
Signal	PCIe x8	PCIe x16	PCIe x8	PCIe x8	PCIe x16	PCI
Slot Type	PCIe x16	PCI	PCI	PCI	PCI	PCI
Signal	PCIe x8	PCI	PCI	PCI	PCI	PCI
PCIe Mini	N/A	N/A	1		1	

* The expansions described above are provided by the backplanes

Specifications

Model Name		TANK-870-Q170
Chassis	Color	Black C + Silver
	Dimensions (WxDxH) (mm)	2-slot: 121.5 x 255.2 x 205 4-slot: 154.8 x 255.2 x 205
	System Fan	Fanless
	Chassis Construction	Extruded aluminum alloys
Motherboard	CPU	7th Gen Intel® Core™ CPU & Intel® Core™ i7-6700TE 2.4 GHz (up to 3.4GHz, quad-core, TDP 35) Intel® Core™ i5-6500TE 2.3 GHz (up to 3.3GHz, quad-core, TDP 35)
	Chipset	Intel® Q170
	System Memory	2 x SO-DIMM DDR4 2666 (4GB pre-installed)(up to 32GB)
IPMI	iRIS Solution	1 x iRIS-2400 (optional)
Storage	Hard Drive	2 x 2.5" SATA 6Gb/s HDD/SSD bay (RAID 0/1 support)
I/O Interfaces	USB	4 x USB 3.2 Gen 1 4 x USB 2.0
	Ethernet	2 x RJ-45: LAN1: GbE by Intel® I219LM LAN2 (iRIS): GbE by Intel® I210
	COM Port	2 x RS-232/422/485 with AFC (DB-9) 4 x RS-232 (2 x RJ-45, 2 x DB-9 with 2.5kV isolation)
	Digital I/O	8-bit Digital I/O (4-in/ 4-out)
	Display	1 x VGA (up to 1920 x 1200@60Hz) 1 x HDMI/DP (up to 3840 x 2160@30Hz /4096 x 2304@60Hz) 1 x iDP (optional)
	Audio	1 x Line-out, 1 x Mic-in
	Wireless	1 x 802.11 a/b/g/n/ac (optional)
	TPM	1 x TPM 2.0 (2 x 10 pin) (optional)
Expansions	PCIe Mini	1 x Half-size (PCIe/ USB 2.0) 1 x Full-size (PCIe/ USB 2.0/ SATA)*
	Backplane	2-slot model: 1 x PCIe x16, 1 x PCI 2-slot model: 2 x PCIe x8 4-slot model: 2 x PCIe x8, 2 x PCI, 1 x Full-size PCIe Mini (PCIe/ USB 2.0) 4-slot model: 1 x PCIe x16, 3 x PCI, 1 x Full-size PCIe Mini (PCIe/ USB 2.0)
Power	Power Input	DC Jack: 9 ~ 36V DC Terminal Block: 9 ~ 36V DC
	Power Consumption	19V@3.68A (Intel® Core™ i7-6700TE with 8 GB memory)
	Internal Power output	5V@3A or 12V@3A
Reliability	Mounting	Wall mount
	Operating Temperature	i7-6700TE: -20ºC ~ 45°C with air flow (SSD), 10% ~ 95% non-condensing i5-6500TE: -20ºC ~ 60°C with air flow (SSD), 10% ~ 95% non-condensing
	Storage Temperature	-40ºC ~ 85°C with air flow (SSD), 10% ~ 90% non-condensing
	Operating Shock	Half-sine wave shock 5G, 11ms, 100 shocks per axis (SSD)
	Operating Vibration	MIL-STD-810G 514.6 C-1 (SSD)
	Weight (Net/Gross)	2-slot: 4.2 kg/6.3 kg 4-slot: 4.5 kg/6.5 kg
	Safety/EMC	CE/FCC/KC
OS	Supported OS	Microsoft® Windows® 8 Embedded, Microsoft® Windows® Embedded Standard 7 E, Microsoft® Windows® 10 IoT Enterprise

* TANK-870-Q170-QGW has no Full-size PCIe mini slot

Dimensions (Unit: mm)

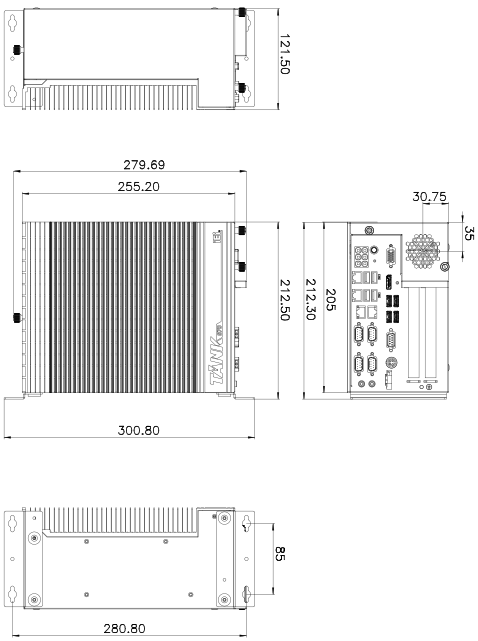

TANK-870-Q170i-2 slot

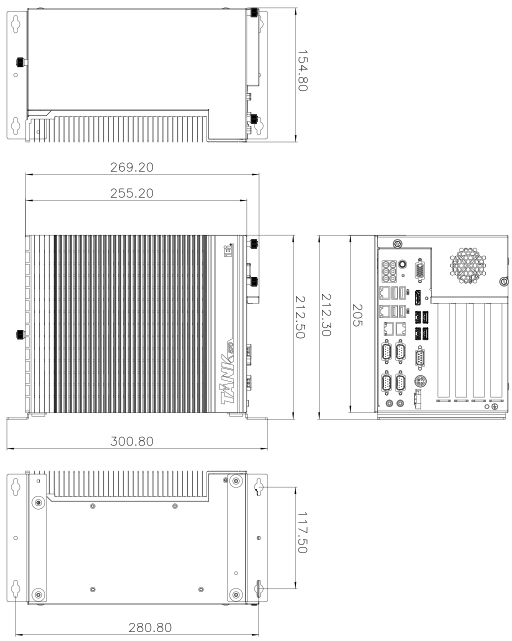

TANK-870-Q170i-4 slot

Ordering Information

Part No.	Description
TANK-870-Q170i-i5/4G/2A-R11	Ruggedized fanless embedded system with Intel® Core™ i5-6500TE 2.3 GHz (up to 3.3 GHz, quad core, TDP 35W), 4GB DDR4 pre-installed memory, 2 x PCIe by 8 expansion, VGA/HDMI+DP/iDP, iRIS-2400 optional, 9 ~ 36V DC, RoHS
TANK-870-Q170i-i5/4G/2B-R11	Ruggedized fanless embedded system with Intel® Core™ i5-6500TE 2.3 GHz (up to 3.3 GHz, quad core, TDP 35W), 4GB DDR4 pre-installed memory, 1 x PCIe by 16 & 1 x PCI expansion, VGA/HDMI+DP/iDP, iRIS-2400 optional, 9 ~ 36V DC, RoHS
TANK-870-Q170i-i5/4G/4A-R11	Ruggedized fanless embedded system with Intel® Core™ i5-6500TE 2.3 GHz (up to 3.3 GHz, quad core, TDP 35W), 4GB DDR4 pre-installed memory, 2 x PCIe by 8 & 2 x PCI expansion, VGA/HDMI+DP/iDP, iRIS-2400 optional, 9 ~ 36V DC, RoHS
TANK-870-Q170i-i5/4G/4B-R11	Ruggedized fanless embedded system with Intel® Core™ i5-6500TE 2.3 GHz (up to 3.3 GHz, quad core, TDP 35W), 4GB DDR4 pre-installed memory, 1 x PCIe by 16 & 3 x PCI expansion, VGA/HDMI+DP/iDP, iRIS-2400 optional, 9 ~ 36V DC, RoHS
TANK-870-Q170i-i7/4G/2A-R11	Ruggedized fanless embedded system with Intel® Core™ i7-6700TE 2.4 GHz (up to 3.4 GHz, quad core, TDP 35W), 4GB DDR4 pre-installed memory, 2 x PCIe by 8 expansion, VGA/HDMI+DP/iDP, iRIS-2400 optional, 9 ~ 36V DC, RoHS
TANK-870-Q170i-i7/4G/2B-R11	Ruggedized fanless embedded system with Intel® Core™ i7-6700TE 2.4 GHz (up to 3.4 GHz, quad core, TDP 35W), 4GB DDR4 pre-installed memory, 1 x PCIe by 16 & 1 x PCI expansion, VGA/HDMI+DP/iDP, iRIS-2400 optional, 9 ~ 36V DC, RoHS
TANK-870-Q170i-i7/4G/4A-R11	Ruggedized fanless embedded system with Intel® Core™ i7-6700TE 2.4 GHz (up to 3.4 GHz, quad core, TDP 35W), 4GB DDR4 pre-installed memory, 2 x PCIe by 8 & 2 x PCI expansion, VGA/HDMI+DP/iDP, iRIS-2400 optional, 9 ~ 36V DC, RoHS
TANK-870-Q170i-i7/4G/4B-R11	Ruggedized fanless embedded system with Intel® Core™ i7-6700TE 2.4 GHz (up to 3.4 GHz, quad core TDP 35W), 4GB DDR4 pre-installed memory, 1 x PCIe by 16 & 3 x PCI expansion, VGA/HDMI+DP/iDP, iRIS-2400 optional, 9 ~ 36V DC, RoHS

Options

Part No.	Description
32000-000002-RS	European power cord
63040-010120-300-RS	Adapter Power;FSP;FSP120-AHAN3;9NA1206708;Active PFC;Vin:90 ~ 264VAC;120W;Dim:75.6*151.3*25.4mm;Plug=6.5mm;Cable=1500mm;Erp(NO LOAD 0.15W);Vout:12VDC;Din 4Pin/lock;CCL;RoHS
63040-010150-700-RS	Adapter Power;FSP;FSP150-ABAN3;9NA1504811;Active PFC;Vin:90 ~ 264VAC;150W;Dim:75.6*151.3*25.4mm;Plug=6.5mm;Cable=1500mm;Erp(NO LOAD 0.15W);Vout:19VDC;Din 4Pin/lock;CCL;RoHS
iRIS-2400-R10	IPMI 2.0 adapter card with AST2400 BMC chip for DDR3 SO-DIMM socket interface
EMB-FAN-KIT02-R10	Fan Module;MODIFY 31100-000272-RS;+12V DC;4PIN;40*40*15mm ;STANDARD;;FD124015LB2W3;; L= 400mm MOLEX 5051-04P P=2.54;CCL;RoHS
EMB-WIFI-KIT01-R20	1T1R wifi module kit for embedded system, IEEE802.11a/b/g/n/ac WiFi with Bluetooth 4.0/3.0+HS, 1 x wifi module, 2 x 250mm RF cable, 2 x Antenna, RoHS
DP-DP-R10	DisplayPort to DisplayPort converter board (for IEI IDP connector)
DP-HDMI-R10	DisplayPort to HDMI converter board (for IEI IDP connector)
DP-LVDS-R10	DisplayPort to 24-bit dual channel LVDS converter board (for IEI IDP connector)
DP-VGA-R10	DisplayPort to VGA converter board (for IEI IDP connector)
DP-DVI-R10	DisplayPort to DVI-D converter board (for IEI IDP connector)
IPCIE-4POE-R10	PCI Express Power over Ethernet frame grabber card, 4-port 1000 Base(T), 802.3af compliant, RoHS
TANK-870-Q170-WES7E64-R10	OS Image with Windows® Embedded Standard 7 E 64-bit for TANK-870-Q170 Series, with DVD-ROM, RoHS
TANK-870-Q170-W10E64-H-R10	OS Image with Windows® Embedded Standard 10 E High End 64-bit for TANK-870-Q170-i7 Series, with DVD-ROM, RoHS
TANK-870-Q170-W10E64-V-R10	OS Image with Windows® Embedded Standard 10 E Value 64-bit for TANK-870-Q170-i5 Series, with DVD-ROM, RoHS
TPM-IN02-R20	20-pin Infineon TPM2.0 module, software mangement tool, firmware v5.5

* The TANK-870 can support up to 40°C operating temperature when installing with the IPCIE-4POE-R10.

Packing List

1 x Chassis Screw	1 x Mounting Bracket	2 x RJ45 to COM Port Cable

TANK-870e-H110

- *High-Performance 6th/7th Generation Intel® Core™ Processor*
- *Fanless Embedded Computer*

Features

- 6th/7th Gen Intel® Core™ processor platform with Intel® H110 chipset and DDR4 memory
- Support dual display VGA+HDMI
- On-board internal power connector for providing power to add-on cards
- Great flexibility for hardware expansion



Specifications

Model Name		TANK-870e-H110
Chassis	Color	Dark silver purple + Silver
	Dimensions (WxDxH) (mm)	132.6 x 255.2 x 190
	System Fan	Fanless
	Chassis Construction	Extruded aluminum alloys
Motherboard	CPU	7th Gen Intel® Core™ CPU & Intel® Core™ i7-6700TE 2.4 GHz (up to 3.4GHz, quad-core, TDP 35) Intel® Core™ i5-6500TE 2.3 GHz (up to 3.3GHz, quad-core, TDP 35)
	Chipset	Intel® H110
	System Memory	2 x SO-DIMM DDR4 2666 (4GB pre-installed)(up to 32GB)
Storage	Hard Drive	2 x 2.5" SATA 6Gb/s HDD/SSD bay
I/O Interfaces	USB	4 x USB 3.2 Gen1
	Ethernet	2 x RJ-45: 2 x GbE by RTL8111G
	COM Port	2 x RS-232/422/485 with AFC (DB-9 with 2.5kV isolation)
	Display	1 x VGA (up to 1920 x 1200@60Hz) 1 x HDMI (up to 3840 x 2160@30Hz)
	Audio	1 x Line-out, 1 x Mic-in
	Wireless	1 x 802.11a/b/g/n/ac (optional)
Expansions	PCIe Mini	1 x Full-size (PCIe/ USB 2.0) 1 x Full-size (PCIe/ USB 2.0/ SATA)
	Backplane	3A: 1 x PCIe x16, 2 x PCI 3B: 1 x PCIe x16, 1 x PCIe x4, 1 x PCI 3C: 3 x PCI
Power	Power Input	DC Jack: 9 ~ 36V DC Terminal Block: 9 ~ 36V DC
	Power Consumption	19 V@3.44 A (Intel® Core™ i7-6700TE with 8 GB memory)
	Internal Power Connector	5V@3A or 12V@3A
Reliability	Mounting	Wall mount & DIN Rail
	Operating Temperature	i7-6700TE -20°C ~ 50°C with air flow (SSD), 10% ~ 95% non-condensing i5-6500TE -20°C ~ 60°C with air flow (SSD), 10% ~ 95% non-condensing
	Storage Temperature	-40ºC ~ 85ºC with air flow (SSD), 5% ~ 90% non-condensing
	Operating Shock	Half-sine wave shock 5G, 11ms, 100 shocks per axis (SSD)
	Operating Vibration	MIL-STD-810G 514.6C-1 (SSD)
	Weight (Net/Gross)	4.2 kg/6.3 kg
	Safety/EMC	CE/FCC/KC
OS	Supported OS	Microsoft® Windows® 8 Embedded, Microsoft® Windows® Embedded Standard 7 E, Microsoft® Windows® 10 IoT Enterprise

Versatile Expansion Interface

Backplane	3A HPE-3S6		3B HPE-3S7			3C HPE-3PCI
Slot	2 x PCI	1 x PCIe x16	1 x PCI	1 x PCIe x4	1 x PCIe x16	3 x PCI
Signal	PCI	PCIe x16	PCI	PCIe x1	PCIe x16	PCI

Fully Integrated I/O

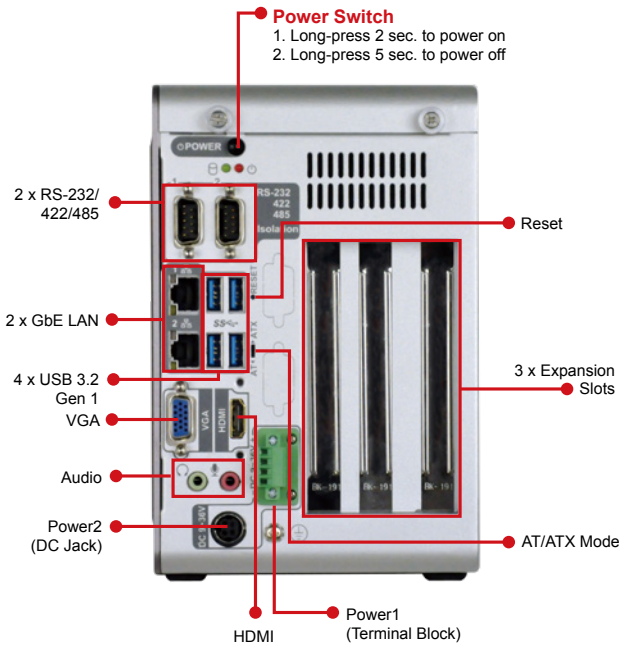

Dimensions (Unit: mm)

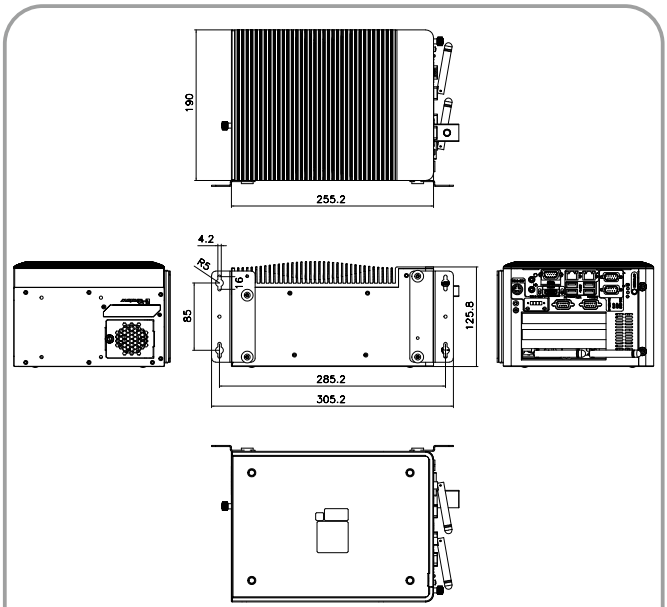

TANK-870e-H110

Ordering Information

Part No.	Description
TANK-870e-H110-i5/4G/3A-R11	Ruggedized fanless embedded system with Intel® Core i5-6500TE 2.3GHz, (up to 3.3 GHz, quad core, TDP 35W), 4GB DDR4 pre-installed memory, 1 x PCIe by 16 & 2 x PCI expansion, VGA/HDMI, 9 ~ 36V DC, RoHS
TANK-870e-H110-i5/4G/3B-R11	Ruggedized fanless embedded system with Intel® Core i5-6500TE 2.3GHz, (up to 3.3 GHz, quad core, TDP 35W), 4GB DDR4 pre-installed memory, 1 x PCIe by 16 & 1 x PCIe by 1 & 1 x PCI expansion, VGA/HDMI, 9 ~ 36V DC, RoHS
TANK-870e-H110-i5/4G/3C-R11	Ruggedized fanless embedded system with Intel® Core™ i5-6500TE 2.3 GHz (up to 3.3 GHz, quad core, TDP 35W), 4GB DDR4 pre-installed memory, 3 x PCI expansion, VGA/HDMI, 9 ~ 36V DC, RoHS
TANK-870e-H110-i7/4G/3A-R11	Ruggedized fanless embedded system with Intel® Core i7-6700TE 2.4GHz, (up to 3.4 GHz, quad core, TDP 35W), 4GB DDR4 pre-installed memory, 1 x PCIe by 16 & 2 x PCI expansion, VGA/HDMI, 9 ~ 36V DC, RoHS
TANK-870e-H110-i7/4G/3B-R11	Ruggedized fanless embedded system with Intel® Core i7-6700TE 2.4GHz, (up to 3.4 GHz, quad core, TDP 35W), 4GB DDR4 pre-installed memory, 1 x PCIe by 16 & 1 x PCIe by 1 & 1 x PCI expansion, VGA/HDMI, 9 ~ 36V DC, RoHS
TANK-870e-H110-i7/4G/3C-R11	Ruggedized fanless embedded system with Intel® Core™ i7-6700TE 2.4 GHz (up to 3.4 GHz, quad core, TDP 35W), 4GB DDR4 pre-installed memory, 3 x PCI expansion, VGA/HDMI, 9 ~ 36V DC, RoHS

Options

Part No.	Description
32000-000002-RS	European power cord
63040-010120-300-RS	Adapter Power;FSP;FSP120-AHAN3;9NA1206708;Active PFC;Vin:90 ~ 264VAC;120W;Dim:75.6*151.3*25.4mm;Plug=6.5mm;Cable=1500mm;Erp(NO LOAD 0.15W);Vout:12VDC;Din 4Pin/lock;CCL;RoHS
EMB-FAN-KIT02-R10	Fan Module;MODIFY 31100-000272-RS;+12V DC;4PIN;40*40*15mm ;STANDARD;;FD124015LB2W3; L= 400mm MOLEX 5051-04P P=2.54;CCL;RoHS
EMB-WIFI-KIT11-R20	1T1R wifi module kit for embedded system, IEEE802.11a/b/g/n/ac WiFi with Bluetooth 4.0/3.0+HS, 1 x wifi module, 2 x 400mm RF cable, 2 x Antenna, RoHS
DK-75-R10	DIN mount kit adapter for VESA-75
E-MPCIE-DLAN-R10	PCIe Mini card supports 2-port GbE with Intel I211 controller, with PMS 194C I/O bracket and 250mm cable
E-MPCIE-LAN-R10	PCIe Mini card supports 1-port GbE with Realtek RTL8111E controller, with PMS 194C I/O bracket and 250mm cable
E-MPCIE-UART-KIT01-R10	PCI Express Mini supports quad RS-232/422/485 port module
TANK-870e-H110-WES7E64-R10	OS Image with Windows® Embedded Standard 7 E 64-bit for TANK-870e-H110 Series, with DVD-ROM, RoHS
TANK-870e-H110-W10E64-H-R10	OS Image with Windows® Embedded Standard 10 E High End 64-bit for TANK-870e-H110-i7 Series, with DVD-ROM, RoHS
TANK-870e-H110-W10E64-V-R10	OS Image with Windows® Embedded Standard 10 E Value 64-bit for TANK-870e-H110-i5 Series, with DVD-ROM, RoHS

Packing List

1 x Chassis Screw	1 x Mounting Bracket

TANK-610-BW

Fanlesss Embedded System

Features

- Intel® Celeron® N3160 processor
- Multiple COM ports: six RS-232 and two RS-232/422/485
- VGA and HDMI dual independent display
- mSATA and one 2.5" SATA storage device
- Wide range temperature





Specifications

Model Name		TANK-610-BW
Chassis	Color	Black C + Silver
	Dimensions (WxDxH) (mm)	184 x 200.6 x 58.2
	System Fan	Fanless
	Chassis Construction	Extruded aluminum alloy
Motherboard	CPU	Intel® Celeron® N3160 1.6 GHz (up to 2.24GHz, quad-core, TDP 6W)
	Chipset	SoC
	System Memory	2 x DDR3L SO-DIMM (2GB pre-installed)(up to 8GB)
Storage	Hard Drive	1 x 2.5" SATA 6Gb/s HDD/SSD Bay
I/O Interfaces	USB	4 x USB 3.2 Gen1
	Ethernet	2 x RJ-45: 2 x GbE by Intel® I210
	COM Port	2 x RS-232/422/485 with AFC 6 x RS-232
	Display	1 x VGA (up to 1920 x 1200@60Hz) 1 x HDMI (up to 3840 x 2160@30Hz)
	Audio	1 x Line-out, 1 x Mic-in
	Wireless	1 x 802.11a/b/g/n/ac (optional)
Expansions	PCIe Mini	1 x Half-size (PCIe/USB 2.0) 1 x Full-size (PCIe/SATA)
Power	Power Input	DC Jack: 9 ~ 36V DC Terminal Block: 9 ~ 36V DC
	Power Consumption	12 V@1.49 A (Intel® Celeron® N3160 with 4 GB DDR3L memory)
Reliability	Mounting	Wall mount, VESA 100
	Operating Temperature	-40°C ~ 60°C with air flow (SSD), 10% ~ 95% non-condensing
	Storage Temperature	-40°C ~ 80°C with air flow (SSD), 10% ~ 95% non-condensing
	Operating Shock	Half-sine wave shock 5G, 11ms, 100 shocks per axis (SSD)
	Operating Vibration	MIL-STD-810G 514.6C-1 (SSD)
	Weight (Net/Gross)	2.2 kg/3 kg
	Safety/EMC	CE/FCC
OS	Supported OS	Microsoft® Windows 8 Embedded, Microsoft® Windows® Embedded Standard 7 E

Various Applications

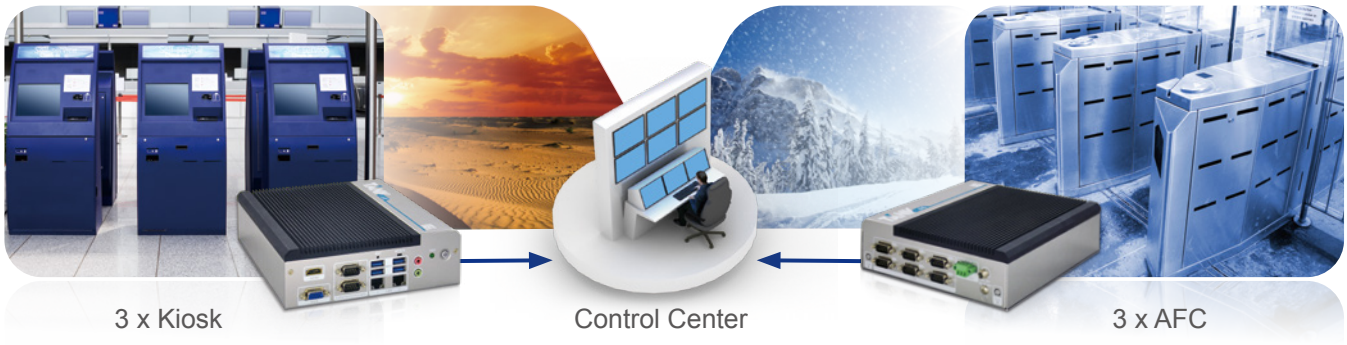

Fully Integrated I/O

Front View

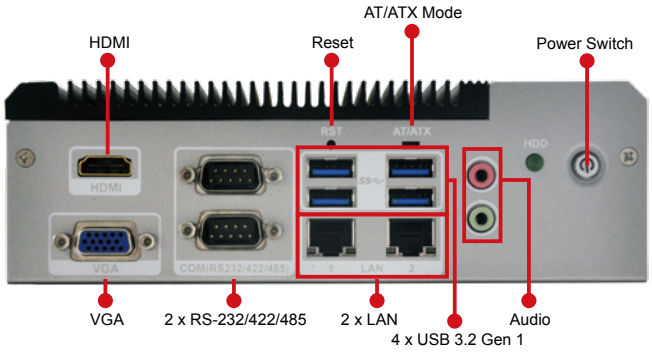

Rear View

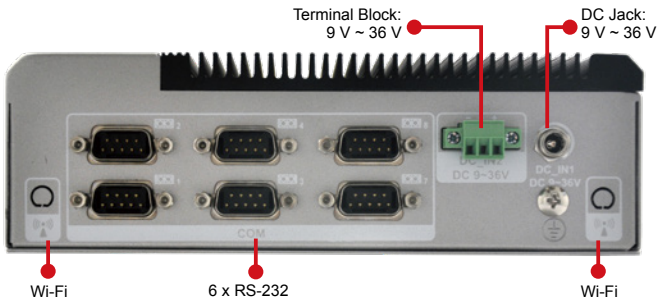

Dimensions (Unit: mm)

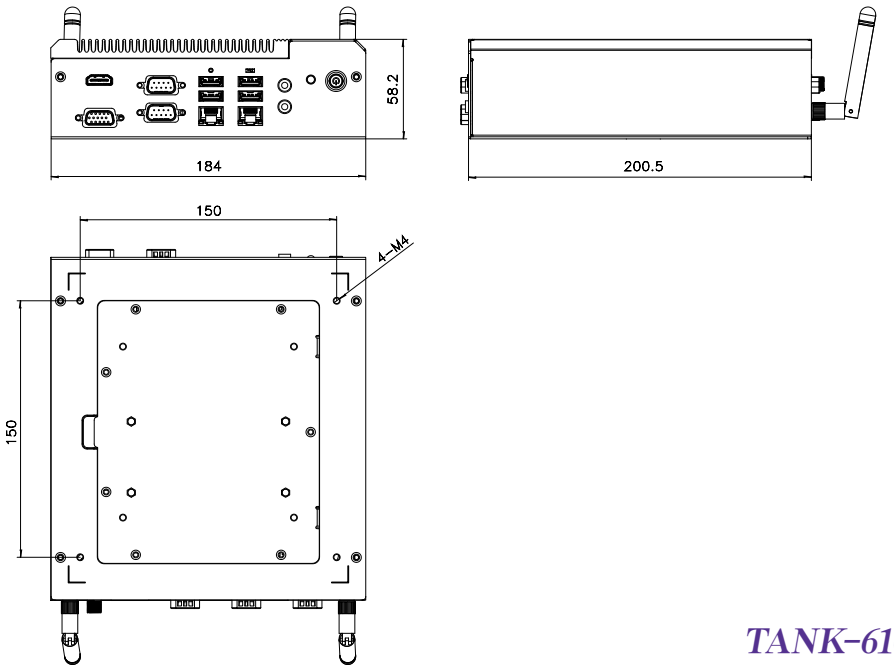

TANK-610-BW

Ordering Information

Part No.	Description
TANK-610-BW-N3/2G-R10	Fanless wide temperature embedded system with Intel® Celeron® N3160 1.6GHz, (up to 2.24 GHz, quad-core, TDP 6W), 2GB DDR3L pre-installed memory, 9 V ~ 36 V DC, with RS-232/422/485, USB 3.2 Gen 1 (5Gb/s), VGA/HDMI, dual Intel® PCIe GbE, RoHS

Options

Part No.	Description
AFLWK-19	VESA 100 mount kit
EMB-WIFI-KIT11-R20	1T1R wifi module kit for embedded system, IEEE802.11a/b/g/n/ac WiFi with Bluetooth 4.0/3.0+HS, 1 x wifi module, 2 x 350mm RF cable, 2 x Antenna, RoHS
TANK-610-BW-WES7E64-R10	OS Image with Windows® Embedded Standard 7 E 64-bit for TANK-610 BW Series, with DVD-ROM, RoHS, R10
DK-100-R10	VESA 100 to DIN-Rail mounting kit

Packing List

Item	Qty	Description
Power cord	1	1500 mm, European Standard
Power adapter (Meet PSE & ErP)	1	FSP065-REBN2, 90 V ~ 264 V AC input, 65 W, 19 V DC output, ErP
Wall mount bracket	1	Wall mount bracket/holder
Screw set	1	

DIN-Rail Embedded System

New 

New 

Model Name		DRPC-330-A7K	DRPC-230-ULT5
Chassis	Color	Black	Black & Silver
	Dimensions (WxDxH)(mm)	58.75 x 130 x 174	Non-slot: 81 x 150 x 190 One-slot: 127 x 150 x 190
	System Fan	Fanless	Fanless
	Chassis Construction	Extruded aluminum alloy	Extruded aluminum alloy
Motherboard	CPU	Marvell® ARMADA® 88F7040 1.4 GHz (quad-core)	Intel® CoreTM i5-8365UE 1.6 GHz (up to 4.1 GHz, quad-core, TDP 15W) Intel® Celeron™4205U 1.8 GHz (dual-core, TDP 15W)
	Chipset	SoC	SoC
	System Memory	1 x On-board DDR4 (4GB pre-installed)	2 x SO-DIMM DDR4 2400 (8GB pre-installed)
Storage	Hard Drive	N/A	1 x 2.5" SATA 6Gb/s HDD/SSD bay
	eMMC	1 x eMMC5.1 (32GB pre-installed)	N/A
	Micro SD	1 x Micro SD slot	N/A
I/O Interfaces	USB	2 x USB 3.2 Gen1	i5 model: 6 x USB 3.2 Gen2 Celeron model: 4 x USB 3.2 Gen2, 2 x USB 2.0
	Ethernet	2 x RJ-45: 2 x GbE by Marvell 88E1512 1 x SFP+: 1 x 10GbE by Marvell 88F7040	3 x RJ-45: 1 x GbE by Intel® I219 2 x GbE by Intel® I210
	COM Port	1 x Console (RJ-45) 2 x RS232/422/485 with AFC (DB9 with 2.5kV isolation) 2 x RS232 (DB9 with 2.5kV isolation)	4 x RS232/422/485 with AFC (DB9) 2 x RS232 (RJ-45)
	Digital I/O	N/A	8-bit Digital I/O (4-in/ 4-out)(pin header)
	Display	N/A	1 x HDMI (up to 3840 x 2160@30Hz) 1 x DP (up to 4096 x 2304@60Hz)
	Wireless	1 x 802.11a/b/g/n/ac (optional)	1 x 802.11a/b/g/n/ac (optional)
	TPM	1 x TPM 2.0 (2 x 10 pin)(optional)	1 x TPM 2.0 (2 x 10 pin)(optional)
	Other	1 x Power button, 1 x Reset button, 1 x Clear CMOS, 1 x LED for Power (Green), 1 x LED for Storage (Yellow), 1 x LED for Alarm (Red)	1 x Power Button, 1 x Reset Button, 1 x AT/ATX Switch, 1 x LED for Power (Green), 1 x LED for HDD (Yellow)
Expansions	PCIe Mini	N/A	1 x Full-size with SIM card slot (PCIe/USB 3.0/SATA)
	M.2	1 x 2230 A-key (PCIe x 1/USB 2.0) 1 x 2280 B-key (PCIe x 1) 1 x 2242/80 B-key with SIM card slot (PCIe x 1/USB 3.0/USB 2.0)	i5 model: 1 x 2230 A-key (PCIe x 1/USB 2.0) Celeron model: 1 x 2230 A-key (PCIe x 1)
	Backplane	N/A	One-slot: 1 x PCIe Gen3 x 4, 1 x USB2.0
Power	Power Input	Terminal block: 9 ~ 36V DC	Terminal block: 12 ~ 24V DC
	Power Consumption	36V @ 0.86A (Marvell® ARMADA® 88F7040 with 4GB memory)	12V @ 4.98A (Intel® CoreTM i5-8365UE with 8GB memory)
	Remote PWR	N/A	N/A
Reliability	Mounting	DIN-Rail	DIN-Rail
	Operating Temperature	-20°C ~ 60°C with air flow, 10% ~ 95% non-condensing	-20°C ~ 60°C with air flow, 10% ~ 95% non-condensing
	Storage Temperature	-40°C ~ 80°C with air flow, 10% ~ 95% non-condensing	-40°C ~ 85°C with air flow (SSD), 10% ~ 95% non-condensing
	Operating Shock	Half-sine wave shock 5G, 11ms, 100 shocks per axis	Half-sine wave shock 5G, 11ms, 100 shocks per axis (SSD)
	Operating Vibration	MIL-STD-810G 514.6C-1	MIL-STD-810G 514.6C-1 (SSD)
	Weight (Net/ Gross)	1.3KG/ 1.45KG	Non-slot: 2.9KG/ 3.2KG One-slot: 3.2KG/ 3.5KG
	Safety/EMC	CE/ FCC	CE/ FCC
	Watchdog Timer	Programmable 1 ~ 255 sec/min	Programmable 1 ~ 255 sec/min
OS	Supported OS	Ubuntu 18.10	Microsoft® Windows 10, Linux

DIN-Rail Embedded System

Preliminary







Model Name		DRPC-140-EHL	DRPC-130-AL	DRPC-120-BT
Chassis	Color	TBD	Black	Black
	Dimensions (WxDxH) (mm)	Single layer: 79 x 216 x 230 Dual layer: 124 x 216 x 230	58.75 x 130 x 174	74.08 x 140 x 171.5
	System Fan	Fanless	Fanless	Fanless
	Chassis Construction	Extruded aluminum alloy	Extruded aluminum alloy	Extruded aluminum alloy
Motherboard	CPU	Intel® Atom™ x6425RE 1.9 GHz (quad-core, TDP 12W)	Intel® Atom™ x5-E3930 1.3 GHz (up to 1.8 GHz, dual-core, TDP 6.5W)	Intel® Atom™ E3845 1.91 GHz (quad-core, TDP 10W)
	Chipset	SoC	SoC	SoC
	System Memory	1 x SO-DIMM DDR4 2400	1 x SO-DIMM DDR3L 1333/1600 (4GB pre-installed)	1 x SO-DIMM DDR3L 1066 (2GB pre-installed)
IPMI	iRIS Solution	N/A	N/A	1 x iRIS-2400 (optional)
Storage	Hard Drive	1 x 2.5" SATA 6Gb/s HDD/SSD bay	1 x 2.5" SATA 6Gb/s HDD/SSD bay	1 x 2.5" SATA 3Gb/s HDD/SSD bay
	eMMC	1 x eMMC5.1	1 x eMMC 5.0 (optional, up to 32GB)	N/A
I/O Interfaces	USB	2 x USB 3.2 Gen2 4 x USB 2.0	4 x USB 3.2 Gen1	2 x USB 3.2 Gen1 2 x USB 2.0
	Ethernet	3 x RJ-45: 3 x 2.5GbE by Intel® GPY215	2 x RJ-45: 2 x GbE by Intel® I211	2 x RJ-45: 1 x GbE by Intel® I211 1 x GbE by Intel® I210
	COM Port	2 x RS232/422/485 with AFC (DB9) 2 x RS232 (DB9) Dual layer: 1 x RS232/422/485 with AFC (DB9 with 2kV isolation)	4 x RS232/422/485 with AFC (DB9)	2 x RS232/422/485 with AFC (DB9 with 3kV isolation) 2 x RS232 (DB9 with 3kV isolation)
	Digital I/O	Dual layer: 16-bit Digital I/O (8-in/ 8-out)(with 2kV isolation)	8-bit Digital I/O (4-in/ 4-out)	8-bit Digital I/O (4-in/ 4-out)
	CAN-bus	Dual layer: 1 x port support two CAN-bus (DB9 with 2kV isolation)	1 x port support two CAN-bus (DB9 with 2.5kV isolation)	N/A
	Display	1 x HDMI (up to 4096 x 2160@60Hz) 1 x DP (up to 4096 x 2160@60Hz)	2 x HDMI (up to 3840 x 2160@30Hz)	1 x HDMI (up to 1920 x 1200@60Hz) 1 x VGA (up to 1920 x 1200@60Hz)
	Wireless	1 x 802.11a/b/g/n/ac (optional)	1 x 802.11a/b/g/n/ac (optional)	1 x 802.11a/b/g/n/ac (optional)
	TPM	1 x TPM 2.0 (2 x 10 pin) (optional)	1 x TPM 2.0 (2 x 10 pin) (optional)	N/A
	Motor connector	Dual layer: 4 x PWM, 1 x ESTOP, 4 x Servo alarm, 4 x QEP (2 x DB44 with 2kV isolation)	N/A	N/A
	Other	1 x Power Button, 1 x Reset Button, 1 x AT/ATX Switch, 1 x LED for Power (Red), 1 x LED for HDD (Green), 1 x LED for 5G Power (Green), 1 x LED for 5G Signal (Green)	1 x Power Button, 1 x Reset Button, 1 x AT/ATX Switch, 1 x LED for Power (Green), 1 x LED for HDD (Yellow)	1 x Power Button, 1 x Reset Button, 1 x AT/ATX Switch
Expansions	PCIe Mini	1 x Full-size (PCIe/USB 2.0/SATA)	1 x Half-size (PCIe/USB 2.0) 1 x Full-size (PCIe/USB 2.0/SATA)	1 x Half-size (PCIe) 1 x Full-size (PCIe/USB 2.0/SATA)
	M.2	1 x 2230 A-key (PCIe x 1/USB 2.0) 1 x 3042/52/80 B-key with USIM slot (PCIe x 1/USB 3.0/USB 2.0)	N/A	N/A
Power	Power Input	Terminal block: 12 ~ 24V DC	Terminal block: 12 ~ 24V DC	Terminal block: 9 ~ 30V DC
	Power Consumption	TBD	12V @ 2.88 A (Intel® Atom™ x5-E3930 with 4GB memory)	12V @ 2.1 A (Intel® Atom™ E3845 with 2GB memory)
	Remote PWR	N/A	Terminal block: PSON	N/A
Reliability	Mounting	DIN-Rail	DIN-Rail	DIN-Rail
	Operating Temperature	-20°C ~ 60°C with air flow (SSD), 10% ~ 95% non-condensing	-20°C ~ 60°C with air flow (SSD), 10% ~ 95% non-condensing	-20°C ~ 60°C with air flow (SSD), 10% ~ 95% non-condensing
	Storage Temperature	-40°C ~ 85°C with air flow (SSD), 10% ~ 95% non-condensing	-40°C ~ 85°C with air flow (SSD), 10% ~ 95% non-condensing	-40°C ~ 85°C with air flow (SSD), 10% ~ 95% non-condensing
	Operating Shock	Half-sine wave shock 5G, 11ms, 100 shocks per axis (SSD)	Half-sine wave shock 5G, 11ms, 100 shocks per axis (SSD)	Half-sine wave shock 5G, 11ms, 100 shocks per axis (SSD)
	Operating Vibration	MIL-STD-810G 514.6C-1 (SSD)	MIL-STD-810G 514.6C-1 (SSD)	MIL-STD-810G 514.6C-1 (SSD)
	Weight (Net/ Gross)	TBD	1.4KG/ 2.5KG	1.4KG/ 2.5KG
	Safety/EMC	CE/ FCC	CE/ FCC	CE/ FCC
	Watchdog Timer	Programmable 1 ~ 255 sec/min	Programmable 1 ~ 255 sec/min	Programmable 1 ~ 255 sec/min
OS	Supported OS	Microsoft® Windows 10, Linux	Microsoft® Windows 10, Linux	Microsoft® 8, Microsoft® Windows® Embedded Standard 7 E

DRPC-330-A7K

- *Fanless DIN-Rail Embedded System*
- *Marvell® ARMADA® 88F7040 Solution*

New

Features

- Marvell® ARMADA® 88F7040
- Supporting 10GbE SFP+
- Multiple COM Ports with isolation
- Multiple expansion slots
- Wide power input 9 ~ 36V

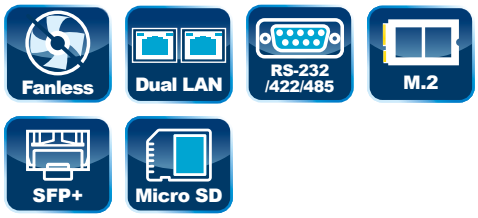



Specifications

Model Name		DRPC-330-A7K
Chassis	Color	Black
	Dimensions (WxDxH)(mm)	58.75 x 130 x 174
	System Fan	Fanless
	Chassis Construction	Extruded aluminum alloy
Motherboard	CPU	Marvell® ARMADA® 88F7040 1.4 GHz (quad-core)
	Chipset	SoC
	System Memory	1 x On-board DDR4 2400 (4GB pre-installed)
Storage	eMMC	1 x eMMC5.1 (32GB pre-installed)
	Micro SD	1 x Micro SD slot
I/O Interfaces	USB	2 x USB 3.2 Gen1
	Ethernet	2 x R-J45: 2 x GbE by Marvell® 88E1512 1 x SFP+:* 1 x 10GbE by Marvell® 88F7040
	COM Port	1 x Console (RJ-45) 2 x RS232/422/485 with AFC (DB9 with 2.5kV isolation) 2 x RS232 (DB9 with 2.5kV isolation)
	Wireless	1 x 802.11a/b/g/n/ac (optional)
	TPM	1 x TPM 2.0 (2 x 10 pin) (optional)
	Other	1 x Power button 1 x Reset button 1 x Clear CMOS 1 x LED for Power (Green) 1 x LED for Storage (Yellow) 1 x LED for Alarm (Red)
Indicators	Indicators	1 x Power (Green), 1 x Storage (Yellow), 1 x Alarm (Red)
Expansions	M.2	1 x 2230 A-key (PCIex1/USB 2.0) 1 x 2280 B-key (PCIex1) 1 x 2242/80 B-key with SIM card slot (PCIe*1/USB 3.0/USB 2.0)
Power	Power Input	Terminal block: 9 ~ 36V DC
	Power Consumption	36V @ 0.86A
Reliability	Mounting	DIN-Rail
	Operating Temperature	-20 ~ 60 °C with air flow, 10% ~ 95% non-condensing
	Storage Temperature	-40 ~ 80 °C with air flow, 10% ~ 95% non-condensing
	Operating Shock	Half-sine wave shock 5G, 11ms, 100 shocks per axis, IEC68-2-27
	Operating Vibration	MIL-STD-810G 514.6C-1
	Weight (Net/Gross)	1.3KG/ 1.45KG
	Safety/EMC	CE/ FCC
	Watchdog Timer	Programmable 1 ~ 255 sec/min
OS	Supported OS	Ubuntu 18.10

*The 10GbE SPF+ port has no transceiver.

Fully Integrated I/O

Top View

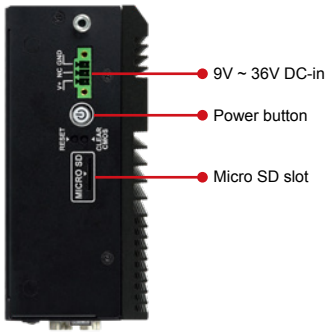

Front View

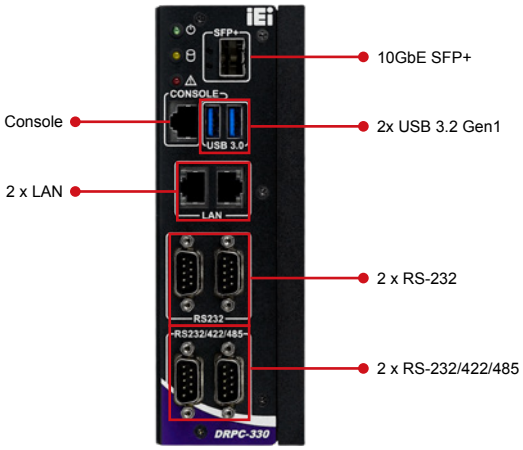

Dimensions (Unit: mm)

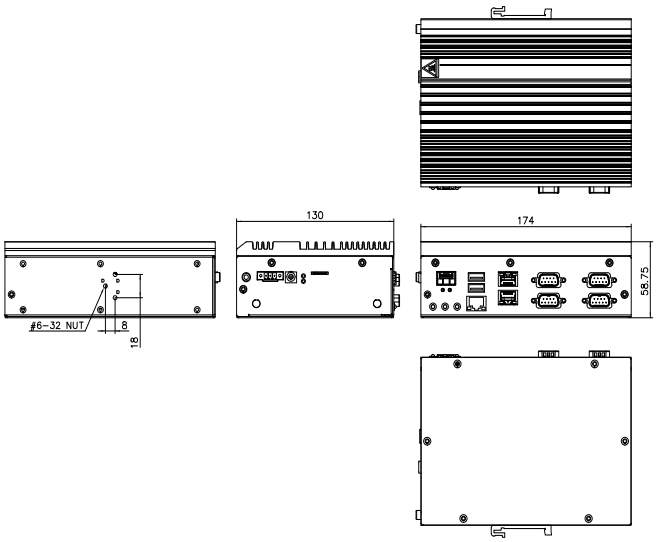

DRPC-330-A7K

Ordering Information

Part No.	Description
DRPC-330-A7K-A1/4G-R10	Fanless system with Marvell Armada 7040 processor, 4GB DDR4 on-board memory, two 1GbE, one 10GbE via SFP+ (without tranceiver), multiple M.2 expansions, COM, 9~36VDC, RoHS

Options

Item	Part No.	Description
Adapter*	63040-010036-210-R	Adapter Power;FSP;FSP036-RHBN3;9NA0362707;;Vin:90~264VAC;36W;Dim:37.8*89.8*27.0mm;Plug=7.5mm;Cable =1500mm;Erp(NO LOAD 0.075W);Vout:12VDC;Φ2.5/Φ5.5/lock;CCL;RoHS
Power cable*	32102-026500-100-RS	WIRE CABLE;POWER CABLE;;2;200MM;18AWG;(A)DC JACK 5.5X2.5, NUT+WASHER ;(B)TERMINAL BLOCK:3P P=3.5;SHANGHAI YING YU;RoHS
Power cord	32702-000200-100-RS	European power cord
USB to console cable	32013-004000-100-RS	Round cable; LAN CABLE; FTDI console cable; 2; 1800MM; (A)USB A TYPE 4P MALE+PCB:FTDI_FT232RL; (B)RJ-45 8P8C; RoHS
Wifi module**	27319-000009-RS	Wireless Lan Module;Wireless LAN & Bluetooth M.2 Module;Sparklan;R9701810011;IEEE802.11a/b/g/n/ ac;2.412GHz~2.4835GHz, 5.15GHz~5.85GHz;M.2 2230;.;3.3V;22*30*2.15mm;QCNFA364A;QCA6174A-5;2x2 MIMO;Dual Band;WCBN808A-Q2;CCL;CCL;RoHS
Antenna**	32505-000900-100-RS	External Antenna;WLAN;RG 178;108MM;TANK-700-QM67-R10;PEAK GAIN 2.0DBI;Exceltek;2.4-2.5GHz/5.15-5.85GHz;REVERSE SMA PLUG;RoHS
RF cable**	32501-004000-100-RS	RF;RF CABLE;LINE DIAMETER:0.81mm;250MM;50Ω;Sparklan;0-6GHz;VSWR≤1.3;I-PEX MHF-4 Plug;REVERSE SMA JACK;NUT x 1;WASHER x 1;RoHS
TPM Module	TPM-IN03-R10	20-pin Infineon SPI TPM2.0 module, software mangement tool, firmware V7.63

*It is required to order Power Cable together with Adapter for power usage.
** Each Wi-Fi module needs two antennas and two RF cables to fully support Wi-Fi function

Packing List

1 x Din-rail mounting bracket	1 x Screw kit

DRPC-230-ULT5

- *Fanless DIN-Rail Embedded System*
- *Whiskey Lake 8th Intel® Core™ Solution (up to 4 cores)*

New



Features

- Intel® Core™ i5-8365UE/ Celeron™ 4305UE Processor
- Triple GbE LAN Ports
- Multiple USB 3.2 Gen 2 (10Gb/s)
- Multiple COM Ports
- Modulized Flexible Expansion



Specifications

Model Name		DRPC-230-ULT5-i5/S	DRPC-230-ULT5-i5	DRPC-230-ULT5-CE/S
Chassis	Color	Black & Silver		
	Dimensions (WxDxH)	81 x 150 x 190	127 x 150 x 190	81 x 150 x 190
	System Fan	Fanless		
	Chassis Construction	Extruded aluminum alloy		
Motherboard	CPU	Intel® Core™ i5-8365UE 1.6 GHz (up to 4.1 GHz, quad-core, TDP 15W)		Intel® Celeron® 4305UE 2GHz (dual-core, TDP 15W)
	Chipset	SoC		
	System Memory	2 x SO-DIMM DDR4 2400 (8GB pre-installed)		
Storage	Hard Drive	1 x 2.5" SATA 6Gb/s HDD/SSD bay		
I/O Interfaces	USB	6 x USB 3.2 Gen2		4 x USB 3.2 Gen2 2 x USB 2.0
	Ethernet	3 x RJ-45: 1 x GbE by Intel® I219 2 x GbE by Intel® I210		
	COM Port	4 x RS232/422/485 with AFC (DB9) 2 x RS232 (RJ-45)		
	Digital I/O	8-bit Digital I/O (4-in/ 4-out)(pin header)		
	Display	1 x HDMI (up to 3840 x 2160@30Hz) 1 x DP (up to 4096 x 2304@60Hz)		
	Wireless	1 x 802.11a/b/g/n/ac (optional)		
	TPM	1 x TPM 2.0 (2 x 10 pin)(optional)		
	Other	1 x Power Button, 1 x Reset Button, 1 x AT/ATX Switch, 1 x LED for Power (Green), 1 x LED for HDD (Yellow)		
Expansions	PCIe Mini	1 x Full-size with SIM card slot (PCIe/USB 3.0/SATA)		
	M.2	1 x 2230 A-key (PCIe x 1/USB 2.0)		1 x 2230 A-key (PCIe x 1)
	Backplane	-	1 x PCIe Gen3 x 4, 1 x USB 2.0	-
Power	Power Input	Terminal block: 12 ~ 24V DC (Reserved internal 40W power with 12V DC output)		
	Power Consumption	12V @ 4.98A (Intel® Core™ i5-8365UE with 8GB memory)		
Reliability	Mounting	DIN-Rail		
	Operating Temperature	-20°C ~ 70°C with air flow (SSD), 10% ~ 95% non-condensing*		
	Storage Temperature	-40°C ~ 85°C with air flow (SSD), 10% ~ 95% non-condensing		
	Operating Shock	Half-sine wave shock 5G, 11ms, 100 shocks per axis (SSD)		
	Operating Vibration	MIL-STD-810G 514.6C-1 (SSD)		
	Weight (Net/Gross)	2.9KG/ 3.2KG	3.2KG/ 3.5KG	2.9KG/ 3.2KG
	Safety/EMC	CE/ FCC		
	Watchdog Timer	Programmable 1 ~ 255 sec/min		
OS	Supported OS	Microsoft® Windows 10, Linux		

* CPU can remain high performance and run at or above its base frequency without any thermal throttling under 60°C.

Fully Integrated I/O

Front View

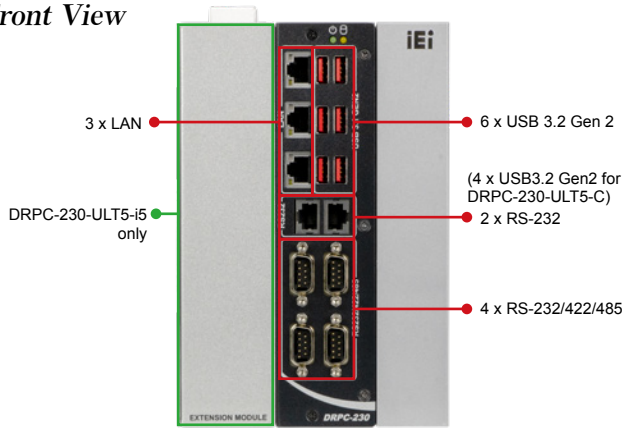

Top View

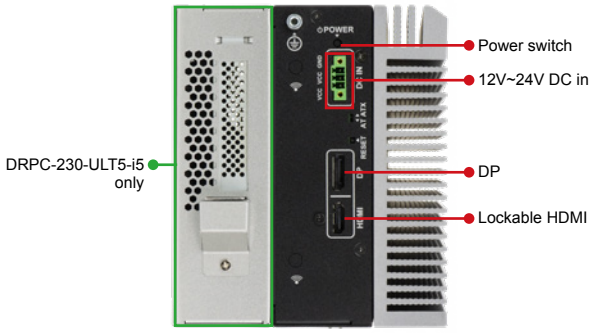

Dimensions (Unit: mm)

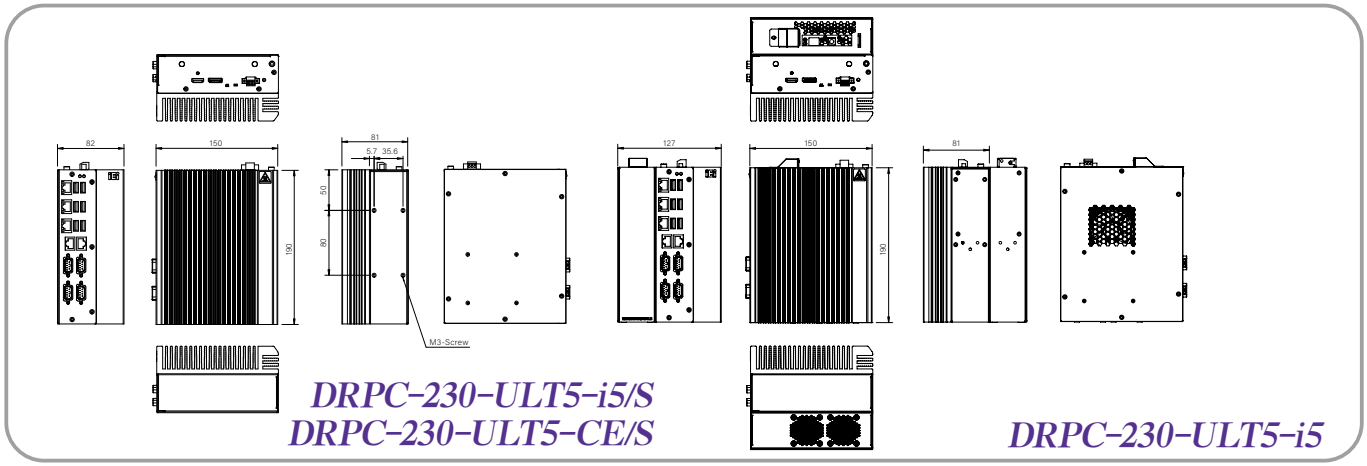

Ordering Information

Part No.	Description
DRPC-230-ULT5-i5/8G/S-R11	Fanless embedded system, Intel® Whiskey Lake i5-8365UE 1.6GHz (quad core, TDP 15W), 8GB DDR4 pre-installed memory, HDMI/DP, 3 PCIe GbE, 6 COM, 12~24V DC and RoHS
DRPC-230-ULT5-i5/8G-R11	Fanless embedded system, Intel® Whiskey Lake i5-8365UE 1.6GHz (quad core, TDP 15W), 8GB DDR4 pre-installed memory, HDMI/DP, 3 PCIe GbE, 6 COM, 12~24V DC, PCIe x4 expansion layer and RoHS
DRPC-230-ULT5-CE/8G/S-R11	Fanless embedded system, Intel® Whiskey Lake Celeron™ 4305UE 2GHz (dual core, TDP 15W), 8GB DDR4 pre-installed memory, HDMI/DP, 3 PCIe GbE LAN, 6 COM, 12~24V DC and RoHS

Options

Item	Part No.	Description
Adapter[1]	63040-010060-211-RS	Adapter Power;FSP;FSP060-DHAN3;9NA0608097;;Vin:90~264VAC;60W;Dim:62.0*110*31.5mm;Plug=7.5mm;Cable=1200mm;Erp(NO LOAD 0.21W);Vout:12VDC;Φ2.5/Φ5.5/lock;CCL;RoHS
Adapter[1/2]	63040-010096-230-RS	Adapter Power;FSP;FSP096-AHAN3;9NA0961412 ;Active PFC;Vin:90~264VAC;96W;Dim:75.6 x 151.3 x 25.4mm;Plug=7.5mm;Cable=1500mm;Erp(NO LOAD 0.15W);Vout:12VDC;Φ2.5/Φ5.5/lock;CCL;RoHS
Power cable[1]	32102-026500-100-RS	WIRE CABLE;POWER CABLE;;2;200MM;18AWG;(A)DC JACK 5.5 x 2.5, NUT+WASHER;(B)TERMINAL BLOCK:3P P=3.5;SHANGHAI YING YU;RoHS
Power cord	32000-000002-RS	European power cord
RJ-45 to D-SUB cable	32005-004600-200-RS	ROUND CABLE;RS-232/422/485;RS-232 CABLE;2;300MM;26AWG;(A)D-SUB 9P MALE+4#40 Screw;(B)RJ-45 8P8C PLUG, Iron+Sheathed;Wins Precision;RoHS
Wifi module[3]	27319-000009-RS	Wireless Lan Module;Wireless LAN & Bluetooth M.2 Module;Sparklan;R9701810011;IEEE802.11a/b/g/n/ac;2.412GHz~2.4835GHz, 5.15GHz~5.85GHz;M.2 2230;.;3.3V;22 x 30 x 2.15mm;QCNFA364A;QCA6174A-5;2x2 MIMO;Dual Band;WCBN808A-Q2;CCL;CCL;RoHS
Antenna[3]	32505-000900-100-RS	External Antenna;WLAN;RG 178;108MM;TANK-700-QM67-R10;PEAK GAIN 2.0DBI;Exceltek;2.4-2.5GHz/5.15-5.85GHz;REVERSE SMA PLUG;RoHS
RF cable[3]	32501-004000-100-RS	RF;RF CABLE;LINE DIAMETER:0.81mm;250MM;50Ω;Sparklan;0-6GHz;VSWR≤1.3;I-PEX MHF-4 Plug;REVERSE SMA JACK;NUT x 1;WASHER x 1;RoHS
TPM Module	TPM-IN03-R10	20-pin Infineon SPI TPM 2.0 module, software mangement tool, firmware V7.63
System fan[4]	31100-000365-RS	FAN;+12V;4PIN;YEN SUN;40 x 40 x 10mm;6500RPM;TWO BALL BEARING;LINE LENGTH:150MM;3.4+/-0.1MM;FD124010HB;FD124010HB-NBG(2W7T);AXIAL FAN;WITH FRAME;6.599CFM;7~13.2V;29dB;75000hur;UL, CUL, TUV;CCL;RoHS
Accelerator cards[4]	Mustang-V100-MX8	Computing Accelerator Card with 8 x Movidius Myriad X MA2485 VPU, PCIe Gen2 x 4 interface, RoHS
	Mustang-V100-MX4	Computing Accelerator Card with 4 x Intel® Movidius™ Myriad™ X MA2485 VPU, PCIe Gen2 x 2 interface, RoHS
OS: Windows Embedded 10	DRPC-230-ULT5-W10E64-V-R10	OS Image with Windows® Embedded Standard 10 E Value 64-bit 2019 for DRPC-230-ULT5 Series, with DVD-ROM, RoHS

[1] It is required to order Power Cable together with Adapter for power usage
[2] Please select 96W adapter if intend to add accelerator cards
[3] Each Wi-Fi module needs two antennas and two RF cables to fully support Wi-Fi function
[4] Only applicable for DRPC-230-ULT5-i5/8G-R10

Packing List

1 x Din-rail mounting kit	1 x Screw kit

DRPC-140-EHL

- *Fanless DIN-Rail Embedded System*
- *Intel® Atom SoC BGA Processor (Elkhart Lake ATom® X6425RE)*

Preliminary

Features

- Elkhart Lake ATom® X6425RE
- Triple 2.5GbE LAN Ports
- Multiple USB 3.2 Gen2 (10Gbit/s)
- Multiple COM Ports
- Modulized Flexible Expansion
- Support TSN (Time-Sensitive Networking)

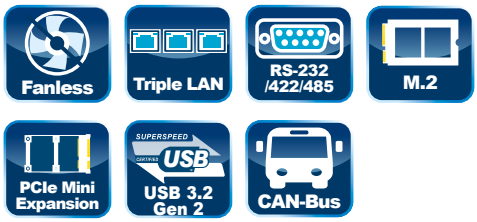



Specifications

Model Name		DRPC-140-EHL-E1/S	DRPC-140-EHL-E1
Chassis	Color	Black	
	Dimensions (WxDxH)(mm)	79 x 216 x 230	124 x 216 x 230
	System Fan	Fanless	
	Chassis Construction	Extruded aluminum alloy	
Motherboard	CPU	Intel® ATom® X6425RE (up to 1.8GHz, 4-core, TDP 12W)	
	Chipset	SoC	
	System Memory	1 x SO-DIMM DDR4 3200 MHz (8GB pre-installed)	
Storage	Hard Drive	1 x 2.5" SATA 6Gb/s HDD/SSD bay	
	eMMC	1 x eMMC 5.1	
I/O Interfaces	USB	2 x USB 3.2 Gen2 4 x USB 2.0	
	Ethernet	3 x 2.5 GbE by Intel® GPY215PHY (colay GPY 211)	
	COM Port	2 x RS-232/422/485 (DB-9) 2 x RS-232 (DB-9)	2 x RS-232/422/485 (DB-9) 2 x RS-232 (DB-9) 1 x RS-232/422/485 (DB-9)
	Digital I/O	8-bit Digital I/O (4-in/ 4-out)(Pin Header on board)	8-bit Digital I/O (4-in/ 4-out) (Pin Header on board) 16-bit Digital I/O 8-in (24Vdc, Sink/Source) 8-out (24Vdc, Sink)
	Moto Conn.	-	4 x PWM 1 x ESTOP 4 x Servo alarm 4 x QEP
	CANBus	-	2 (1 x DB-9)
	Display	1 x HDMI (up to 4096 x 2160 @60Hz) 1 x DP (up to 4096 x 2160 @60Hz)	
	Wireless	1 x 802.11a/b/g/n/ac (optional)	
	TPM	1 x TPM 2.0 By pin header (optional)	
	Others	1 x Power Button, 1 x Reset Button, 1 x AT/ATX Switch, 1 x LED for Power (Red) 1 x LED for HDD (Green), 1 x LED for 5G Power (Green), 1 x LED for 5G Signl (Green)	
Expansions	PCIe Mini	1 x Full-size PCIe Mini slot (PCIe/USB 2.0/SATA)	
	M.2	1 x 2230 A-key (PCIe/USB 2.0) 1 x 3042/52/80 B-key with USIM slot (PCIe/USB 2.0/USB 3.2 Gen1)	
Power	Power Input	Terminal block: 12 ~ 24V DC	
	Power Consumption	TBD	
Reliability	Mounting	DIN-Rail	
	Operating Temperature	-20°C ~ 60°C with air flow (SSD), 10% 95%, non-condensing	
	Storage Temperature	-40°C ~ 85°C with air flow (SSD), 10% 95%, non-condensing	
	Operating Shock	Half-sine wave shock 5G, 11ms, 100 shocks per axis, IEC68-2-27	
	Operation Vibration	MIL-STD-810G 514.6C-1 (SSD)	
	Weight (Net/Gross)	TBD	TBD
	Safety / EMC	CE/FCC Class A	CE/FCC Class A EMS Surge: (Expansion com port) CM mode +/-2KV DM mode +/-1KV
	Watchdog timer	Programmable 1 ~ 255 sec/min	
OS	Supported OS	Microsoft® Windows® 10, Linux	

Fully Integrated I/O

Top View

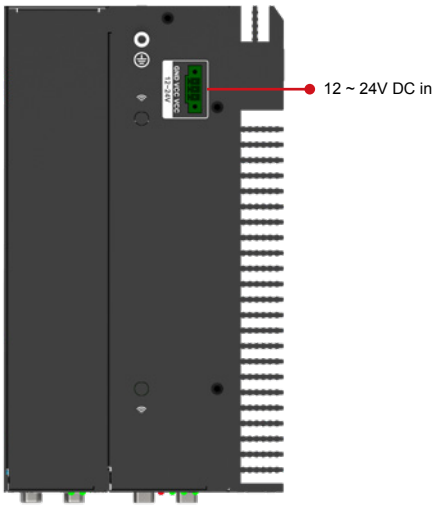

Front View

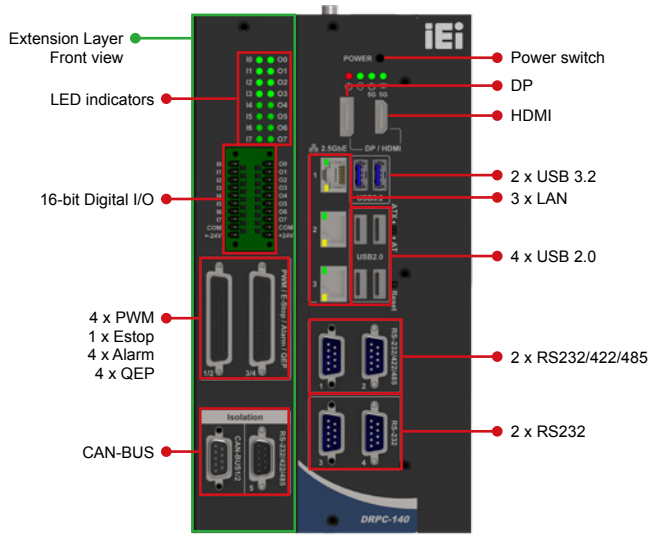

Dimensions (Unit: mm)

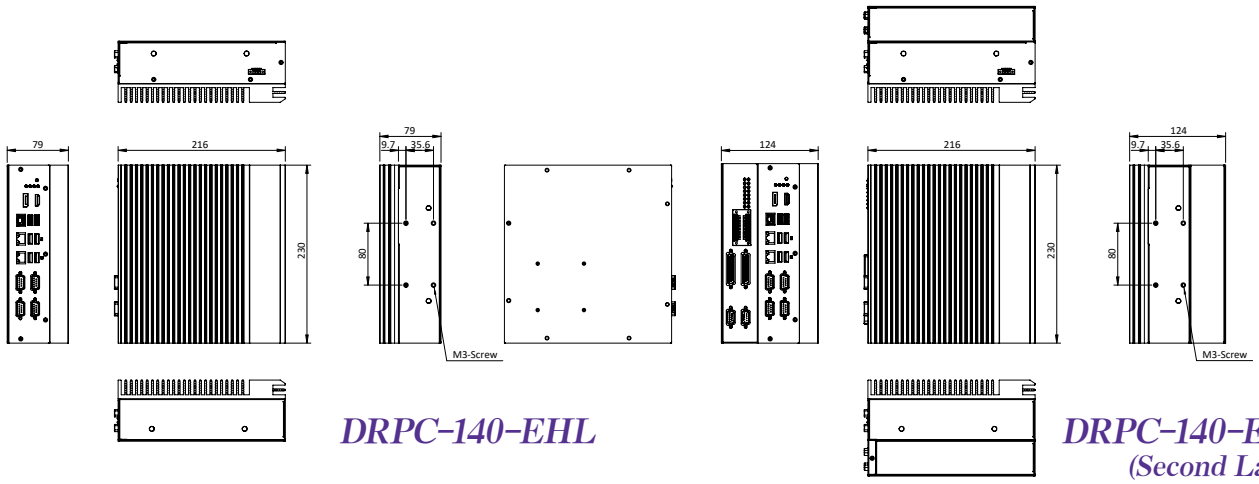

Ordering Information

Part No.	Description
DRPC-140-EHL-E1/8G/S-R10	Fanless embedded system, Intel® Atom® X6425RE, 8GB DDR4 pre-installed memory, HDMI/DP, 3 SGMII 2.5GbE, 4 COM, 12~24V DC and RoHS
DRPC-140-EHL-E1/8G-R10	Fanless embedded system, Intel® Atom® X6425RE, 8GB DDR4 pre-installed memory, HDMI/DP, 3 SGMII 2.5GbE, 4 COM, 12~24V DC, Riser card extension layer and RoHS

Options

Item	Part No.	Description
Adapter	TBD	TBD
Power cable	TBD	TBD
Wi-Fi Module	27319-000009-RS*	Wireless Lan Module;Wireless LAN & Bluetooth M.2 Module;Sparklan;R9701810011;IEEE802.11a/b/g/n/ac;2.412GHz~2.4835GHz, 5.15GHz~5.85GHz;M.2 2230;.;3.3V;22*30*2.15mm;QCNFA364A;QCA6174A-5;2x2 MIMO;Dual Band;WCBN808A-Q2;CCL;CCL;RoHS
Antenna	32505-000900-100-RS*	External Antenna;WLAN;RG 178;108MM;TANK-700-QM67-R10;PEAK GAIN 2.0DBI;Exceltek;2.4-2.5GHz/5.15-5.85GHz;REVERSE SMA PLUG;RoHS
RF Cable	32501-004000-100-RS*	RF;RF CABLE;LINE DIAMETER:0.81mm;250MM;;;50Ω;Sparklan;0-6GHz;VSWR≤1.3;I-PEX MHF-4 Plug;REVERSE SMA JACK;NUT x 1;WASHER x 1;;RoHS
TPM Module	TPM-IN02-R20	20-pin Infineon TPM2.0 module, software mangement tool, firmware v5.5
Motion cards**	TBD	Motion control I/O Card with DIO 8 IN / 8 OUT, 4 x PWM, 4 x Servo alarm, 4 x QEP, CAN-BUS, RS232/422/485, RoHS

* Each Wi-Fi module needs two antennas and two RF cables to fully support Wi-Fi function.
** Only applicable for DRPC-140-EHL-E1/8G/S-R10

Packing List

1 x Din-rail mounting kit	1 x Screw kit	1 x SATA cable

DRPC-130-AL

- *Fanless DIN-Rail Embedded System*
- *Intel® Atom™ x5-E3930 1.3GHz (up to 1.8 GHz) Solution*



Features

- Intel® Atom™ x5-E3930 1.3GHz (up to 1.8 GHz)
- DDR3L 1.35V SO-DIMM supported
- Serial, CAN bus and digital I/O interface



Specifications

Model Name		DRPC-130-AL
Chassis	Color	Black
	Dimensions (WxDxH) (mm)	58.75 x 130 x 174
	System Fan	Fanless
	Chassis Construction	Extruded aluminum alloy
Motherboard	CPU	Intel® Atom™ x5-E3930 1.3 GHz (up to 1.8 GHz, dual-core, TDP 6.5W)
	Chipset	SoC
	System Memory	1 x SO-DIMM DDR3L 1333/1600 (4GB pre-installed)
Storage	Hard Drive	1 x 2.5" SATA 6Gb/s HDD/SSD bay
	eMMC	1 x eMMC 5.0 (optional, up to 32GB)
I/O Interfaces	USB	4 x USB 3.2 Gen1
	Ethernet	2 x RJ-45: 2 x GbE by Intel® I211
	COM Port	4 x RS232/422/485 with AFC (DB9)
	Digital I/O	8-bit Digital I/O (4-in/ 4-out)
	CAN-bus	1 x port support two CAN-bus (DB9 with 2.5kV isolation)
	Display	2 x HDMI (up to 3840 x 2160@30Hz)
	Wireless	1 x 802.11a/b/g/n/ac (optional)
	TPM	1 x TPM 2.0 (2 x 10 pin)(optional)
	Other	1 x Power Button, 1 x Reset Button, 1 x AT/ATX Switch, 1 x LED for Power (Green), 1 x LED for HDD (Yellow)
Expansions	PCIe Mini	1 x Half-size (PCIe/USB 2.0) 1 x Full-size (PCIe/USB 2.0/SATA)
Power	Power Input	Terminal block: 12 ~ 24V DC
	Power Consumption	12V @ 2.88 A (Intel® Atom™ x5-E3930 with 4GB memory)
	Remote PWR	Terminal block: PSON
Reliability	Mounting	DIN-Rail
	Operating Temperature	-20°C ~ 60°C with air flow (SSD), 10% ~ 95% non-condensing
	Storage Temperature	-40°C ~ 85°C with air flow (SSD), 10% ~ 95% non-condensing
	Operating Shock	Half-sine wave shock 5G, 11ms, 100 shocks per axis (SSD)
	Operating Vibration	MIL-STD-810G 514.6C-1 (SSD)
	Weight (Net/Gross)	1.4KG/ 2.5KG
	Safety/EMC	CE/ FCC
	Watchdog Timer	Programmable 1 ~ 255 sec/min
OS	Supported OS	Microsoft® Windows 10, Linux

Fully Integrated I/O

Front View

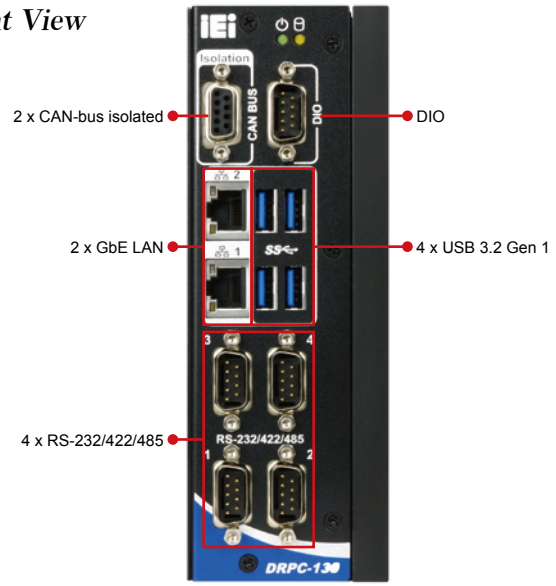

Top View

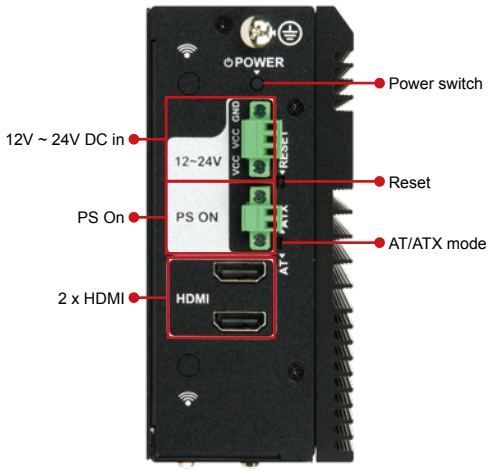

Dimensions (Unit: mm)

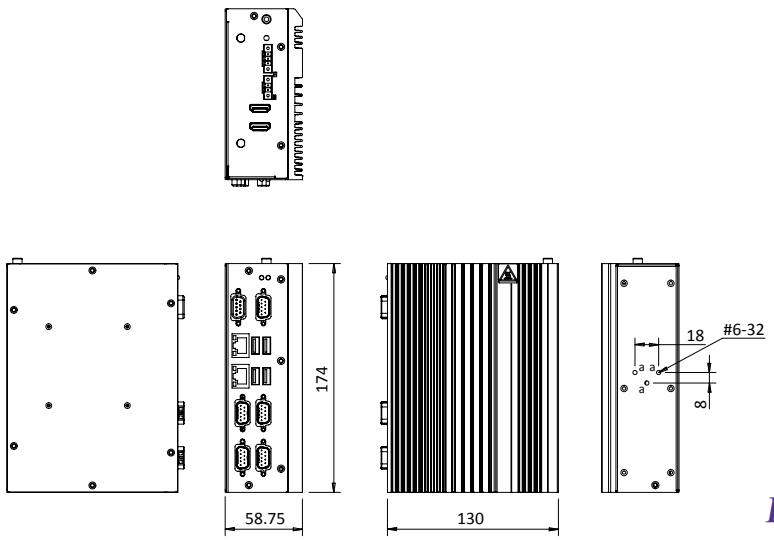

DRPC-130-AL

Ordering Information

Part No.	Description
DRPC-130-AL-E1-R11	Fanless embedded system, Intel® Apollo Lake x5-E3930 1.3GHz (up to 1.8GHz, dual core), two HDMI, 8-bit DIO, CAN-Bus, COM, 12~24V DC and RoHS
DRPC-130-AL-E1/4GB-R11	Fanless embedded system, Intel® Apollo Lake x5-E3930 1.3GHz (up to 1.8GHz, dual core), 4GB DDR3L pre-installed memory, two HDMI, 8-bit DIO, CAN-Bus, COM, 12~24V DC and RoHS

Options

Item	Part No.	Description
Adapter*	63040-010036-210-RS	Adapter Power;FSP;FSP060-DHAN3;9NA0608010;Vin:90~264VAC;60W;Dim:62.0*110*31.5mm;Plug=7.5mm;Cable=1200mm;Erp(NO LOAD 0.21W);Vout:12VDC;Φ2.5/Φ5.5/lock;CCL;RoHS
Power Cable*	32102-026500-100-RS	WIRE CABLE;POWER CABLE;2;200MM;18AWG;(A)DC JACK 5.5X2.5, NUT+WASHER ;(B)TERMINAL BLOCK:3P P=3.5;SHANGHAI YING YU;RoHS
Power Cord	32702-000400-200-RS	European power cord
Wireless Kit	EMB-WIFI-KIT01-R20	1T1R Wi-Fi module kit for embedded system, IEEE802.11a/b/g/n/ac Wi-Fi with Bluetooth 4.0/3.0+HS, 1 x Wi-Fi module, 2 x 250mm RF cable, 2 x Antenna, RoHS
TPM Module	TPM-IN02-R20	20-pin Infineon TPM2.0 module, software mangement tool, firmware v5.5
DIN-Rail Mounting Kit	DK-DRPC-R10	Rugged DIN-rail mounting kit for DPRC series only
OS: Windows Embedded 10	DRPC-130-W10E64-E-R10	OS Image with Windows® 10 IoT Enterprise Entry 64-bit for DRPC-130-AL Series, with DVD-ROM, RoHS

*It is required to order Power Cable together with Adapter for power usage

Packing List

1x Din-rail mounting kit	1 x Screw kit

DRPC-120-BT

- *Fanless DIN-Rail Embedded System*
- *Intel® E3845 1.91GHz Solution*



Features

- Intel® Atom™ E3845 1.91GHz
- 1 x 2.5" SATA HDD/SSD drive bay
- DDR3L 1.35V SO-DIMM support
- Programmable OLED display
- 8-bit digital I/O (4-bit inputs/outputs)
- IEI iRIS-2400 solution

IPMI 2.0 Compliant | Fanless | PCIe Mini Expansion | Dual LAN | RS-232 /422/485

User Friendly Installation

The DRPC-120 is designed with an easy removable back cover for users to install SATA HDD, PCIe Mini cards, DDR3 memory modules or iRIS-2400 modules conveniently.

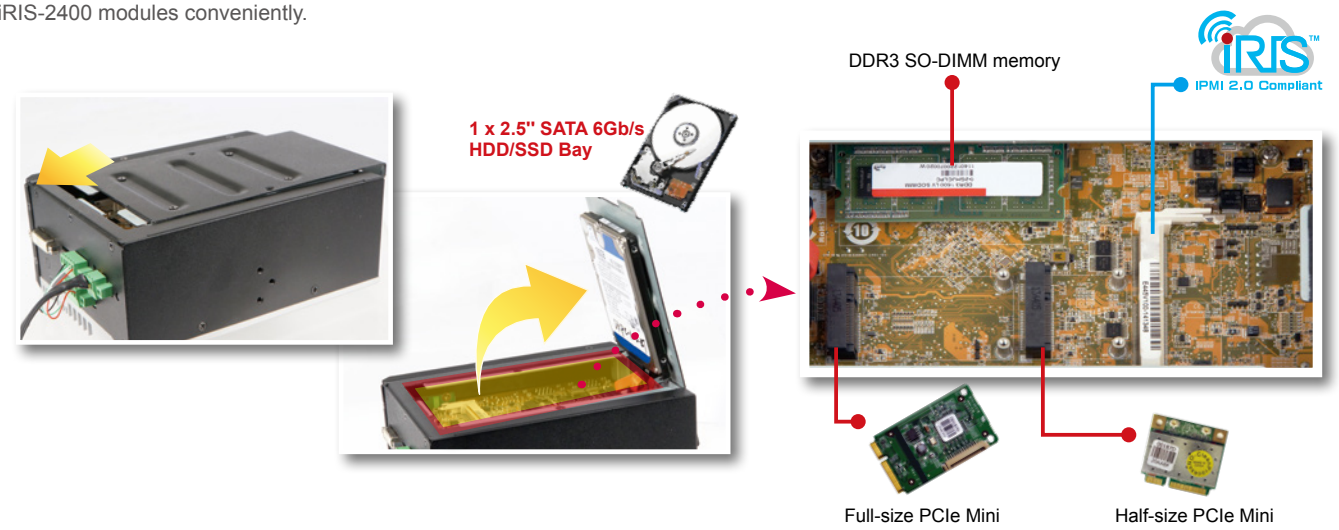

8-Channel Digital I/O

The DRPC-120 is outfitted with 8-channel (4-bit input and 4-bit output) digital I/O to provide digital input and output signals for control of industrial devices.

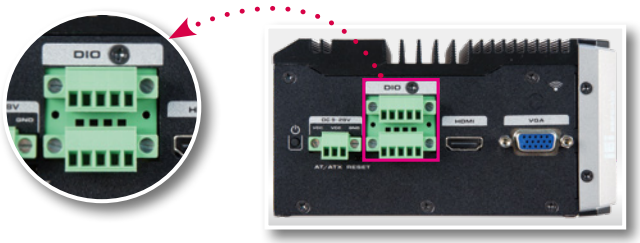

Fanless

The DRPC-120 series provides the best components for generating less heat, while maintaining high system performance. With the fanless design, the DRPC-120 reduces system failure caused by fans and extends the lifetime of the device.



iRIS Solution

IPMI 2.0 Compliant

By installing the IEI iRIS-2400 module, the DRPC-120 is capable to complete your IoT application through the advanced remote control features, such as power management and control, remote KVM for device status monitoring, sending active alerts and warning messages by e-mail or SMS.

DIN Rail Standard

A DIN rail is a metal rail of a standard type widely used for mounting circuit breakers and industrial control equipment inside equipment racks. These products are typically made from cold rolled carbon steel sheet with a zinc-plated and chromated bright surface finish. The term derives from the original specifications having been published by Deutsches Institut für Normung (DIN) in Germany, which have since been adopted as European (EN) and international (ISO) standards.

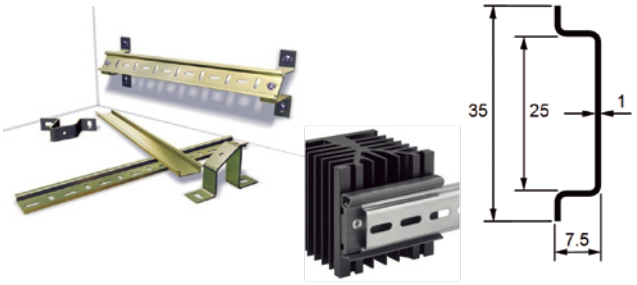

Communication Gateway

For high surge ESD automation environments, the DRPC series provides isolated digital IO, CAN-bus and serial communication ports.

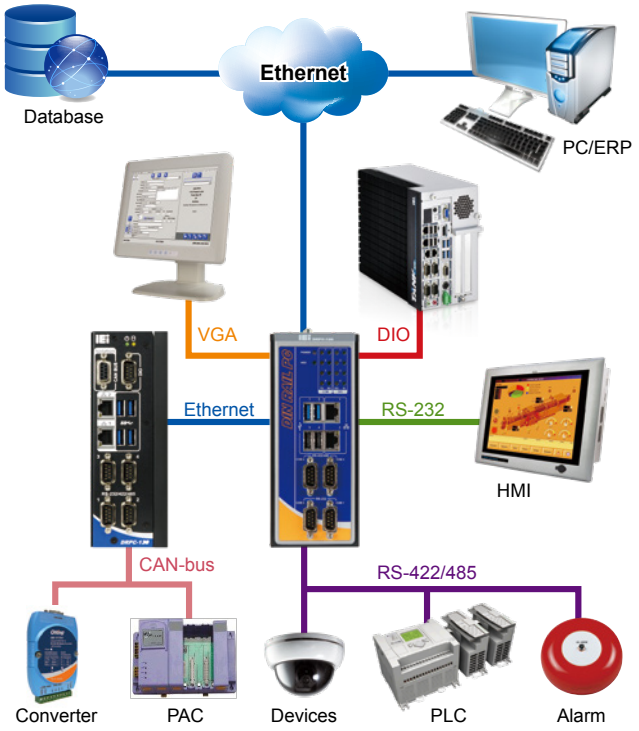

OLED Indicator Function

- **Programmable OLED Display**
  Users can program their own APIs to show any information by the OLED display.
- **Programmable Function Keys**
  Users can program the four keys to control OLED display.
- **Terminal Screen & Status Display**
  It supports both text format and graphic format.
- **Protocol & Demo Source Code Open**
  IEI provides the protocol & demo source code for users to program their own usage.

DRPC-120 OLED indicator

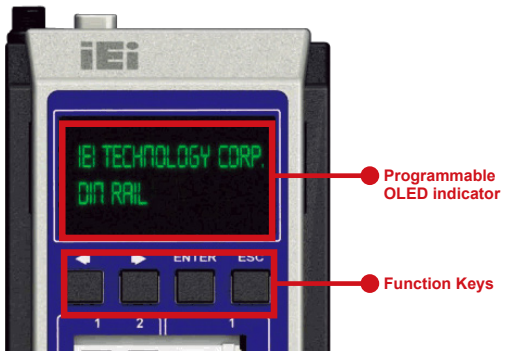

Fully Integrated I/O

Front View

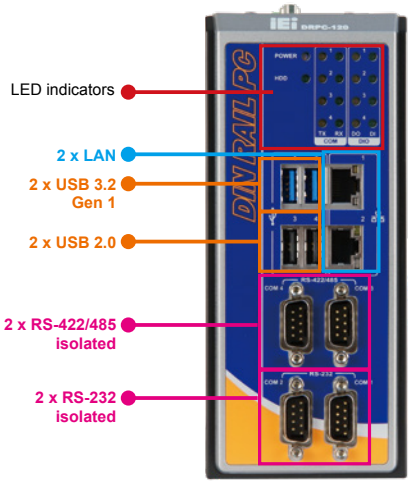

Top Side View

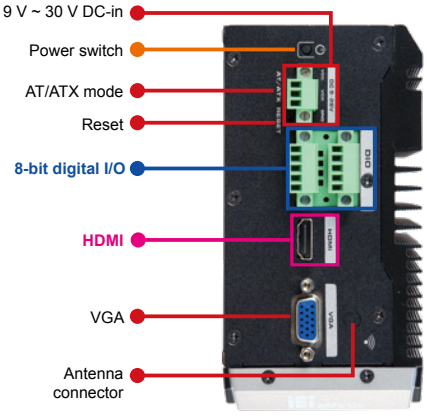

Specifications

Model Name		DRPC-120-BT
Chassis	Color	Black
	Dimensions (WxDxH) (mm)	74.08 x 140 x 171.5
	System Fan	Fanless
	Chassis Construction	Extruded aluminum alloy
Motherboard	CPU	Intel® Atom™ E3845 1.91 GHz (quad-core, TDP 10W)
	Chipset	SoC
	System Memory	1 x SO-DIMM DDR3L 1066 (2GB pre-installed)
IPMI	iRIS Solution	1 x iRIS-2400 (optional)
Storage	Hard Drive	1 x 2.5" SATA 3Gb/s HDD/SSD bay
I/O Interfaces	USB	2 x USB 3.2 Gen1 2 x USB 2.0
	Ethernet	2 x RJ-45: 1 x GbE by Intel® I211 1 x GbE by Intel® I210
	COM Port	2 x RS232/422/485 with AFC (DB9 with 3kV isolation*) 2 x RS232 (DB9 with 3kV isolation*)
	Digital I/O	8-bit Digital I/O (4-in/ 4-out)
	Display	1 x HDMI (up to 1920 x 1200@60Hz) 1 x VGA (up to 1920 x 1200@60Hz)
	Wireless	1 x 802.11a/b/g/n/ac (optional)
	Other	1 x Power Button, 1 x Reset Button, 1 x AT/ATX Switch
Expansions	PCIe Mini	1 x Half-size (PCIe) 1 x Full-size (PCIe/USB 2.0/SATA)
Power	Power Input	Terminal block: 9 ~ 30V DC
	Power Consumption	12V @ 2.1A (Intel® Atom™ E3845 with 2GB memory)
Reliability	Mounting	DIN-Rail
	Operating Temperature	-20°C ~ 60°C with air flow (SSD), 10% ~ 95% non-condensing
	Storage Temperature	-40°C ~ 85°C with air flow (SSD), 10% ~ 95% non-condensing
	Operating Shock	Half-sine wave shock 5G, 11ms, 100 shocks per axis (SSD)
	Operating Vibration	MIL-STD-810G 514.6C-1 (SSD)
	Weight (Net/ Gross)	1.4KG/ 2.5KG
	Safety/EMC	CE/ FCC
	Watchdog Timer	Programmable 1 ~ 255 sec/min
OS	Supported OS	Microsoft® 8, Microsoft® Windows® Embedded Standard 7 E

*COM port isolation: 3kV for 1 sec, 2.5kV for 1 minute

Ordering Information

Part No.	Description
DRPC-120-BTi-E5-OLED/2G-R11	Fanless embedded system, Intel® Bay-Trail E3845 1.91 GHz, TDP 10W, 2GB DDR3L pre-installed memory, one VGA, one HDMI, 8 CH DIO, iRIS-2400 optional, 9 V ~ 28 V DC, OLED indicators, R11, RoHs
DRPC-120-BTi-E5-LED/2G-R11	Fanless embedded system, Intel® Bay-Trail E3845 1.91 GHz, TDP 10W, 2GB DDR3L pre-installed memory, one VGA, one HDMI, 8 CH DIO, iRIS-2400 optional, 9 V ~ 28 V DC, LED indicators, R11, RoHs

Dimensions (Unit: mm)

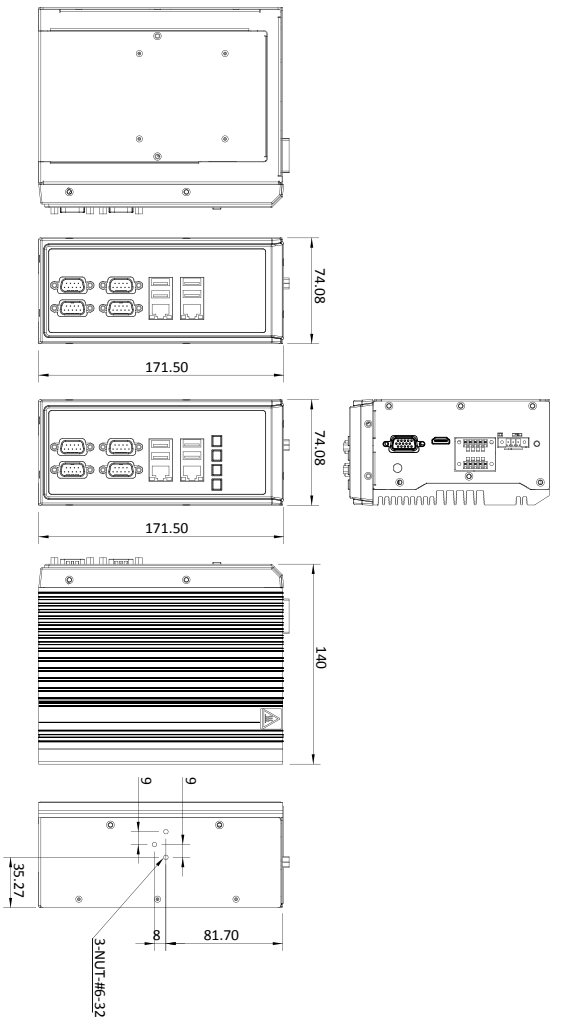

DRPC-120-BT

Options

Item	Part No.	Description
Adapter*	63040-010036-210-RS	Adapter Power;FSP;FSP060-DHAN3;9NA0608010;Vin:90~264VAC;60W;Dim:62.0*110*31.5mm;Plug=7.5mm;Cable=1200mm;Erp (NO LOAD 0.21W);Vout:12VDC;Φ2.5/Φ5.5/lock;CCL;RoHS
Power Cable*	32102-026500-100-RS	WIRE CABLE;POWER CABLE;;2;200MM;18AWG;(A)DC JACK 5.5X2.5, NUT+WASHER ;(B)TERMINAL BLOCK:3P P=3.5;SHANGHAI YING YU;RoHS
Power Cord	32702-000400-200-RS	European power cord
Wireless Kit	EMB-WIFI-KIT01-R20	1T1R Wi-Fi module kit for embedded system, IEEE802.11a/b/g/n/ac Wi-Fi with Bluetooth 4.0/3.0+HS, 1 x Wi-Fi module, 2 x 250mm RF cable, 2 x Antenna, RoHS
DIN-Rail Mounting Kit	DK-DRPC-R10	Rugged DIN-rail mounting kit for DPRC series only
OS: Windows Embedded 7	DRPC-120-WES7E-R10 (CD-ROM)	OS Image with Windows® Embedded Standard 7 E for DRPC-120 Series, CDROM, RoHS

*It is required to order Power Cable together with Adapter for power usage

Packing List

1 x Screw kit	1 x Mounting bracket
1 x SATA cable & SATA power cable	

Compact Size Embedded System

Fanless



New





	Model Name	ITG-100AI	ITG-100-AL	uIBX-250-BW
Chassis	Color	Blue & Silver	Blue & Silver	Black
	Dimensions (WxDxH) (mm)	137 x 102.8 x 49.4	Single layer: 137 x 102.8 x 36.2 Dual layer: 137 x 102.8 x 56.2	137 x 102.8 x 52
	System Fan	Fanless	Fanless	Fanless
	Chassis Construction	Extruded aluminum alloy	Extruded aluminum alloy	Extruded aluminum alloy
Motherboard	CPU	Intel® Atom™ x5-E3930 1.3 GHz (up to 1.8 GHz, dual-core, TDP 6.5W)	Intel® Atom™ x5-E3930 1.3 GHz (up to 1.8 GHz, dual-core, TDP 6.5W)	Intel® Celeron® N3160 1.6 GHz (up to 2.24 GHz, quad-core, TDP 6W)
	Chipset	SoC	SoC	SoC
	System Memory	1 x SO-DIMM DDR3L 1600/1867 (8GB pre-installed)	1 x SO-DIMM DDR3L 1600/1867 (2GB pre-installed)(up to 8GB)	1 x SO-DIMM DDR3L 1600 (2GB pre-installed)(up to 8GB)
Storage	Hard Drive	N/A	1 x 2.5" SATA 6Gb/s HDD/SSD bay	1 x 2.5" SATA 6Gb/s HDD/SSD bay
	SATADOM	1 x 128GB pre-installed	N/A	N/A
	eMMC	1 x eMMC5.0 (up to 32GB)(optional)	1 x eMMC5.0 (up to 32GB)(optional)	N/A
	Micro SD	1 x Micro SD slot	1 x Micro SD slot (optional)	N/A
I/O Interfaces	USB	2 x USB 3.2 Gen1	2 x USB 3.2 Gen1 2 x USB 2.0 (optional)	4 x USB 3.2 Gen1
	Ethernet	2 x RJ-45: 2 x GbE by Intel® I211	2 x RJ-45: 2 x GbE by Intel® I211	2 x RJ-45: 2 x GbE by Intel® I211
	COM Port	2 x RS232/422/485 with AFC (DB9/RJ-45)	2 x RS232/422/485 with AFC (DB9/RJ-45) 2 x RS232 (optional)	2 x RS232/422/485 with AFC (RJ-45)
	Digital I/O	N/A	8-bit Digital I/O (4-in/ 4-out)(optional)	N/A
	Display	1 x VGA (up to 1920 x 1080@60Hz)	1 x VGA (up to 1920 x 1080@60Hz)	1 x HDMI (up to 3840 x 2160@30Hz) 1 x VGA (up to 1920 x 1080@60Hz)
	Audio	N/A	N/A	1 x Line-out, 1 x Line-in
	Wireless	1 x 802.11a/b/g/n/ac (optional)	1 x 802.11a/b/g/n/ac (optional)	1 x 802.11a/b/g/n/ac (optional)
	Other	1 x Power Button, 1 x Reset Button, 1 x AT/ATX Switch, 1 x LED for Power (Green), 1 x LED for HDD (Yellow)	1 x Power Button, 1 x Reset Button, 1 x AT/ATX Switch, 1 x LED for Power (Green), 1 x LED for HDD (Yellow)	1 x Power Button, 1 x Reset Button, 1 x AT/ATX Switch, 1 x LED for HDD (Green)
Expansions	PCIe Mini	Pre-installed Mustang-MPCIE-MX2 AI accelerator card	1 x Full-size (PCIe/USB 2.0/SATA)	1 x Full-size (PCIe/USB 2.0/SATA)
	M.2	1 x 2230 A-key (PCIe x 1/USB 2.0)	1 x 2230 A-key (PCIe x 1/USB 2.0)	N/A
Power	Power Input	Terminal block: 9 ~ 36V DC	Terminal block: 12 V DC	DC Jack: 12V DC
	Power Consumption	12V @ 1.2A (Intel® Atom™ E3930 with 8GB memory)	12V @ 1A (Intel® Atom™ E3930 with 2GB memory)	12V @ 2A (Intel® Celeron® N3160 with 2GB memory)
Reliability	Mounting	DIN-Rail	DIN-Rail/ Wall-mount	Wall-mount/ VESA 75
	Operating Temperature	-20°C ~ 50°C with air flow, 10% ~ 95% non-condensing	-20°C ~ 60°C with air flow (SSD), 10% ~ 95% noncondensing	-20°C ~ 60°C with air flow (SSD), 10% ~ 95% non-condensing
	Storage Temperature	-20°C ~ 70°C with air flow, 10% ~ 90% non-condensing	-30°C ~ 70°C with air flow (SSD), 10% ~ 90% non-condensing	-20°C ~ 80°C with air flow (SSD), 10% ~ 90% non-condensing
	Operating Shock	Half-sine wave shock 5G, 11ms, 100 shocks per axis (SSD)	Half-sine wave shock 5G, 11ms, 100 shocks per axis (SSD)	Half-sine wave shock 5G, 11ms, 100 shocks per axis (SSD)
	Operating Vibration	MIL-STD-810G 514.6C-1 (SSD)	MIL-STD-810G 514.6C-1 (SSD)	MIL-STD-810G 514.6C-1 (SSD)
	Weight (Net/ Gross)	895g/ 1.7kg	Single layer: 0.67g/ 1.03kg Dual layer: 0.86g/ 1.22kg	470g/ 1.4kg
	Safety/EMC	CE/ FCC	CE/ FCC	CE/ FCC
	Watchdog Timer	Programmable 1 ~ 255 sec/min	Programmable 1 ~ 255 sec/min	Programmable 1 ~ 255 sec/min
OS	Supported OS	Microsoft® Windows 10, Linux Ubuntu 16.04 LTS	Microsoft® Windows 10, Linux	Microsoft® Windows 8, Microsoft® Embedded Standard 7 E

ITG-100AI

- *Ultra Compact Size*
- *Fanless DIN-Rail Embedded System*
- *Intel Vision Accelerator Design for AI Deep Learning*

New



Features

- Intel® Atom™ x5-E3930 1.3GHz (up to 1.8 GHz)
- Two GbE LAN ports
- Two RS-232/422/485
- M.2 A-key slot for expansion
- Pre-installed a Mustang-MPCIE-MX2 that has two Intel Myriad X VPUs for AI deep learning workload consolidation



Application

The ITG-100AI is pre-installed with a Mustang-MPCIE-MX2 AI accelerator card, which includes two Intel® Movidius™ Myriad™ X VPU, to provide a flexible AI inference solution.

VPU is short for vision processing unit. It can run AI faster, and is well suited for low power consumption applications such as surveillance, retail and transportation. With the advantage of power efficiency and high performance to dedicate Deep Neural Networks (DNN) topologies, it is perfect to be implemented in AI edge computing device to reduce total power usage, providing longer duty time for the rechargeable edge computing equipment.



Surveillance



Retail



Transportation

Key Features of Intel® Movidius™ Myriad™ X VPU

- Native FP16 support
- Rapidly port and deploy neural networks in Caffe and Tensorflow formats
- End-to-End acceleration for many common deep neural networks
- Industry-leading Inferences/S/Watt performance

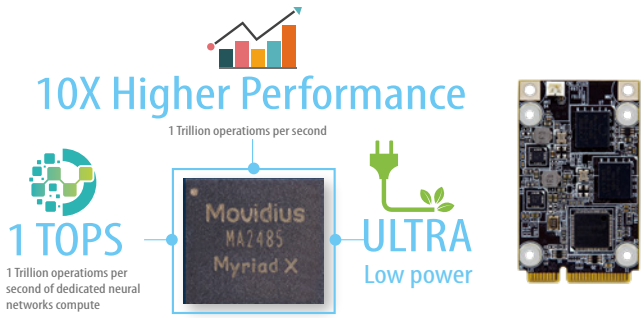

Ultra-compact Size

Space limitation is one of the constraints commonly seen in today's industrial environment. Under tight restrictions, the ITG-100AI not only provides palm-sized design to meet the space requirement, but also comes with adequate basic I/O interfaces for various applications.



Specifications

Model Name		ITG-100AI
AI Accelerator Card	Model Name	Mustang-MPCIE-MX2
	Main Chip	2 x Intel® Movidius™ Myriad™ X MA2485 VPU
	Supported Topology	AlexNet, GoogleNetV1/V2, Mobile_SSD, MobileNetV1/V2, MTCNN, Squeezenet1.0/1.1, Tiny Yolo V1 & V2, Yolo V2, ResNet-18/50/101
Chassis	Color	Blue & Silver
	Dimensions (WxDxH)(mm)	137 x 102.8 x 49.4
	System Fan	Fanless
	Chassis Construction	Extruded aluminum alloy
Motherboard	CPU	Intel® Atom™ x5-E3930 1.3 GHz (up to 1.8 GHz, dual-core, TDP 6.5W)
	Chipset	SoC
	System Memory	1 x SO-DIMM DDR3L 1600/1867 (8GB pre-installed)
Storage	SATADOM	1 x 128GB pre-installed
	eMMC	1 x eMMC5.0 (up to 32GB)(optional)
	Micro SD	1 x Micro SD slot
I/O Interfaces	USB	2 x USB 3.2 Gen1
	Ethernet	2 x RJ-45: 2 x GbE by Intel® I211
	COM Port	2 x RS232/422/485 with AFC (DB9/RJ45)
	Display	1 x VGA (up to 1920 x 1080@60Hz)
	Wireless	1 x 802.11a/b/g/n/ac (optional)
	Other	1 x Power Button, 1 x Reset Button, 1 x AT/ATX Switch, 1 x LED for Power (Green), 1 x LED for HDD (Yellow)
Expansions	M.2	1 x 2230 A-key (PCIe x 1/USB 2.0)
Power	Power Input	Terminal block: 9 ~ 36V DC
	Power Consumption	12V @ 1.2A (Intel® Atom™ E3930 with 8GB memory)
Reliability	Mounting	DIN-Rail
	Operating Temperature	-20°C ~ 50°C with air flow, 10% ~ 95% non-condensing
	Storage Temperature	-20°C ~ 70°C with air flow, 10% ~ 90% non-condensing
	Operating Shock	Half-sine wave shock 5G, 11ms, 100 shocks per axis (SSD)
	Operating Vibration	MIL-STD-810G 514.6C-1 (SSD)
	Weight (Net/Gross)	895g/ 1.7kg
	Safety/EMC	CE/ FCC
	Watchdog Timer	Programmable 1 ~ 255 sec/min
OS	Supported OS	Microsoft® Windows 10, Linux Ubuntu 16.04 LTS

Ordering Information

Part No.	Description
ITG-100AI-E1/8GB/S-R10	Fanless embedded system, Intel® Apollo Lake x5-E3930 1.3GHz (up to 1.8GHz, dual core), 8GB DDR3L pre-installed memory, VGA, M.2, COM, 9-36V DC, Mustang-MPCIE-MX2 and RoHS

Options

Item	Part No.	Description
Wi-Fi Module	27319-000009-RS*	Wireless Lan Module;Wireless LAN & Bluetooth M.2 Module;Sparklan;R9701810011;IEEE802.11a/b/g/n/ac;2.412GHz~2.4835GHz, 5.15GHz~5.85GHz;M.2 2230;.;3.3V;22*30*2.15mm;QCNFA364A;QC A6174A-5;2x2 MIMO;Dual Band;WCBN808A-Q2;CCL;CCL;RoHS
Antenna	32505-000900-100-RS*	External Antenna;WLAN;RG 178;108MM;TANK-700-QM67-R10;PEAK GAIN 2.0DBI;Exceltek;2.4-2.5GHz/5.15-5.85GHz;REVERSE SMA PLUG;RoHS
RF Cable	32501-004000-100-RS*	RF;RF CABLE;LINE DIAMETER:0.81mm;250MM ;;;50Ω;Sparklan;0-6GHz;VSWR≤1.3;I-PEX MHF-4 Plug;REVERSE SMA JACK;NUT*1;WASHER*1;;RoHS

* Each Wi-Fi module needs two antennas and two RF cables to fully support Wi-Fi function.

Fully Integrated I/O

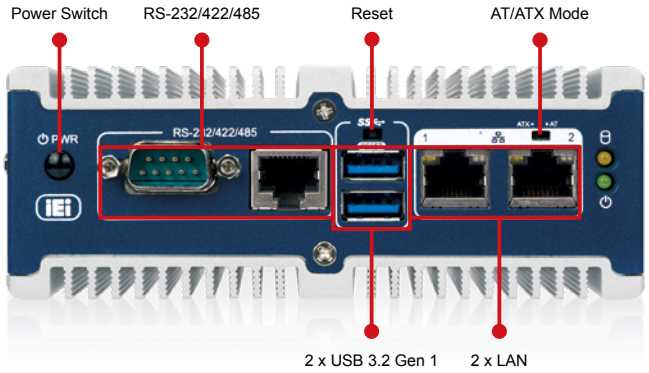

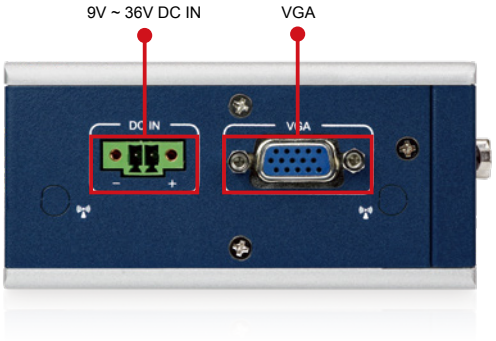

Dimensions (Unit: mm)

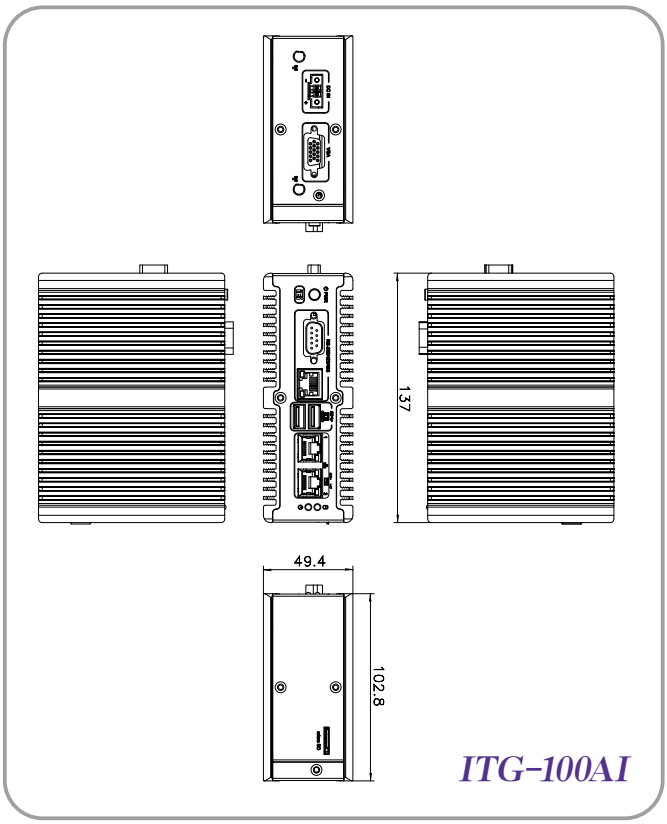

Packing List

1 x Screw kit	1 x 36W power adapter
1 x Din-rail mounting bracket	1 x Power cable
1 x RJ-45 to DB-9 COM port cable	1 x Power Cord

ITG-100-AL

- *Ultra Compact Size*
- *Fanless DIN-Rail Embedded System*
- *Intel® Atom™ x5-E3930 1.3GHz (up to 1.8GHz) Solution*



Features

- Intel® Atom™ x5-E3930 1.3GHz (up to 1.8 GHz)
- Two GbE LAN ports
- Two RS-232/422/485
- Full-size PCIe Mini slot and M.2 A-key slot for expansion



Intelligent Gateway

The ITG-100-AL equips with basic I/O ports and supports a wide range of operating temperature, making it suitable for acting the role as a data collection gateway in smart factory environments.

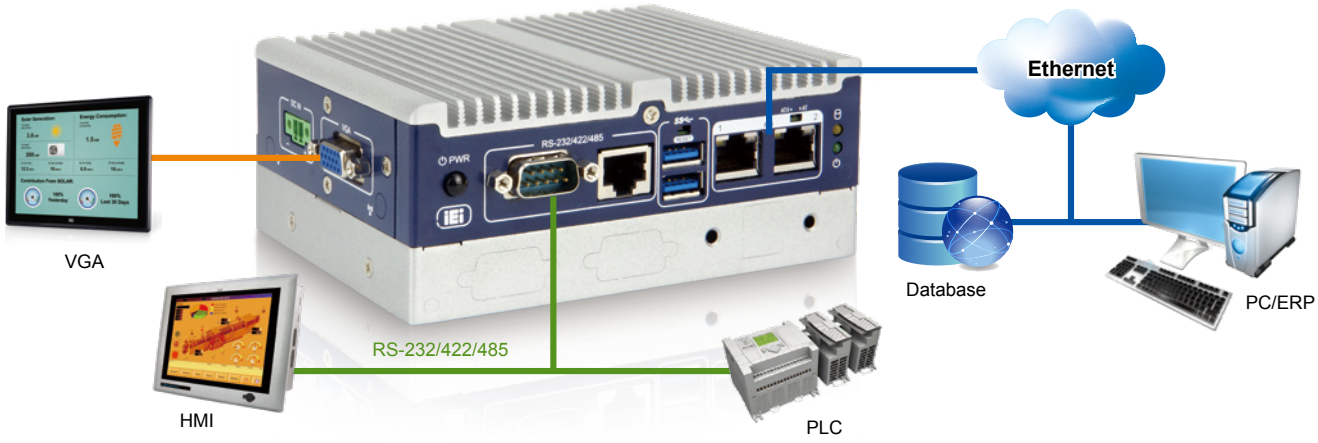

A Wide Range of Applications

Given its practical features, the ITG-100-AL can be applied to a variety of application fields, such as military, industrial automation, and traffic control.

Military | Industrial Automation | Traffic control





Multi-layer Feature

Additional block layers can be assembled to achieve I/O interface expansion and data storage requirement. With choices of adding a 2.5" SATA HDD/SSD bay, a knockout-hole layer with selectable I/O interface, or both of above-mentioned options, the ITG-100-AL could be modularized to what best fit users' preferences and still remaining its compact size.

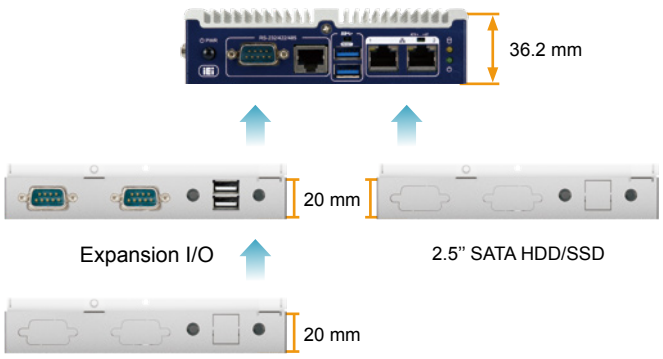

Functionality Expansions

In order to respond the demand of adding more functions to the system, the ITG-100-AL is designed with a full-size PCIe Mini slot reserved for 3G/4G and a M.2 A-key slot reserved for Wi-Fi to provide function expansions with easy access.



Full-size PCIe Mini



M.2 A key



Ultra-compact Size

Space limitation is one of the constraints commonly seen in today's industrial environment. Under tight restrictions, the ITG-100-AL not only provides palm-sized design to meet the space requirement, but also comes with adequate basic I/O interfaces for various applications.



Specifications

Model Name		ITG-100-AL
Chassis	Color	Blue & Silver
	Dimensions (WxDxH) (mm)	Single layer: 137 x 102.8 x 36.2 Dual layer: 137 x 102.8 x 56.2
	System Fan	Fanless
	Chassis Construction	Extruded aluminum alloy
Motherboard	CPU	Intel® Atom™ x5-E3930 1.3 GHz (up to 1.8 GHz, dual-core, TDP 6.5W)
	Chipset	SoC
	System Memory	1 x SO-DIMM DDR3L 1600/1867 (2GB pre-installed)(up to 8GB)
Storage	Hard Drive	1 x 2.5" SATA 6Gb/s HDD/SSD bay
	eMMC	1 x eMMC5.0 (up to 32GB)(optional)
	Micro SD	1 x Micro SD slot (optional)
I/O Interfaces	USB	2 x USB 3.2 Gen1 2 x USB 2.0 (optional)
	Ethernet	2 x RJ-45: 2 x GbE by Intel® I211
	COM Port	2 x RS232/422/485 with AFC (DB9/RJ-45) 2 x RS232 (optional)
	Digital I/O	8-bit Digital I/O (4-in/ 4-out)(optional)
	Display	1 x VGA (up to 1920 x 1080@60Hz)
	Wireless	1 x 802.11a/b/g/n/ac (optional)
	Other	1 x Power Button, 1 x Reset Button, 1 x AT/ATX Switch, 1 x LED for Power (Green), 1 x LED for HDD (Yellow)
Expansions	PCIe Mini	1 x Full-size (PCIe/USB 2.0/SATA)
	M.2	1 x 2230 A-key (PCIe x 1/USB 2.0)
Power	Power Input	Terminal block: 12 V DC (9 ~ 36V DC BOM optional)[1]
	Power Consumption	12V @ 1A (Intel® Atom™ E3930 with 2GB memory)
Reliability	Mounting	DIN-Rail/ Wall-mount
	Operating Temperature	-20°C ~ 60°C with air flow (SSD), 10% ~ 95% non-condensing
	Storage Temperature	-30°C ~ 70°C with air flow (SSD), 10% ~ 90% non-condensing
	Operating Shock	Half-sine wave shock 5G, 11ms, 100 shocks per axis (SSD)
	Operating Vibration	MIL-STD-810G 514.6C-1 (SSD)
	Weight (Net/Gross)	Single layer: 0.67g/ 1.03kg Dual layer: 0.86g/ 1.22kg
	Safety/EMC	CE/ FCC
	Watchdog Timer	Programmable 1 ~ 255 sec/min
OS	Supported OS	Microsoft® Windows 10, Linux

1. By order production, MOQ:100

Fully Integrated I/O

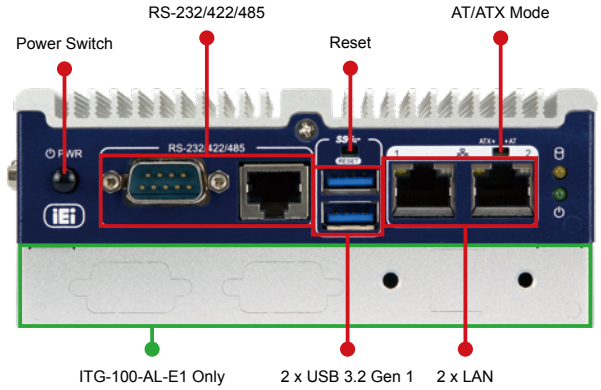

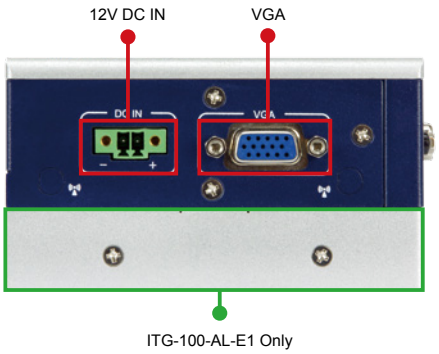

Dimensions *(Unit: mm)*

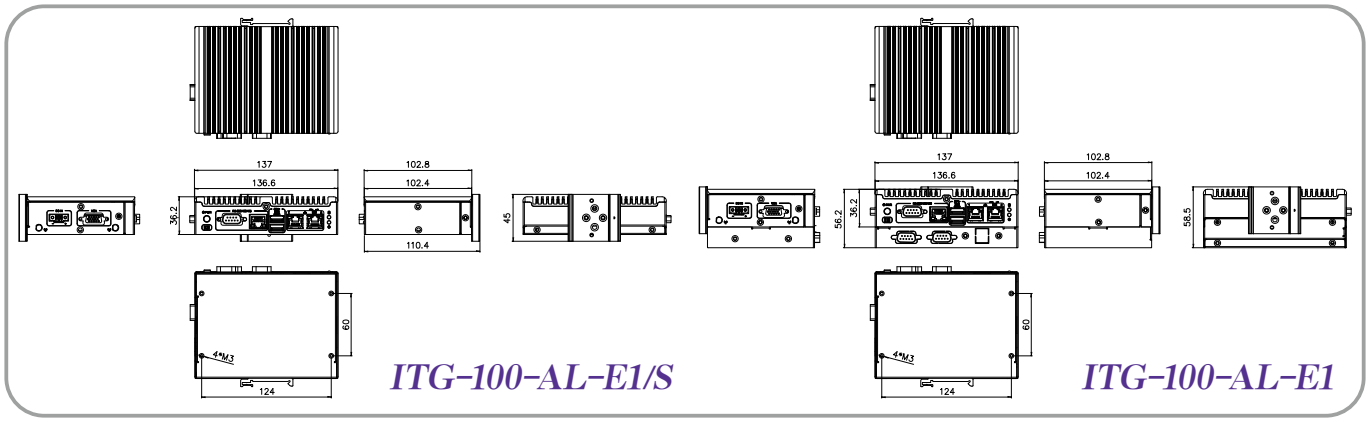

Ordering Information

Part No.	Description
ITG-100-AL-E1/S-R10	Fanless embedded system, Intel® Apollo Lake x5-E3930 1.3GHz (up to 1.8GHz, dual core), VGA, M.2, COM, 12V DC and RoHS
ITG-100-AL-E1/2GB/S-R10	Fanless embedded system, Intel® Apollo Lake x5-E3930 1.3GHz (up to 1.8GHz, dual core), 2GB DDR3L pre-installed memory, VGA, M.2, COM, 12V DC and RoHS
ITG-100-AL-E1-R10	Fanless embedded system, Intel® Apollo Lake x5-E3930 1.3GHz (up to 1.8GHz, dual core), VGA, M.2, COM, 12V DC, flexible I/O expansion and RoHS
ITG-100-AL-E1/2GB-R10	Fanless embedded system, Intel® Apollo Lake x5-E3930 1.3GHz (up to 1.8GHz, dual core), 2GB DDR3L pre-installed memory, VGA, M.2, COM, 12V DC, flexible I/O expansion and RoHS

Options

Item	Part No.	Description
4GB Memory	79B00-G004-XXX-RS*	DDR3L (204 PIN);4GB;1.35V;0º ~ 85º;RoHS
8GB Memory	79B00-G008-XXX-RS*	DDR3L (204 PIN);8GB;1.35V;0º ~ 85º;RoHS
Wi-Fi Module	27319-000009-RS**	Wireless Lan Module;Wireless LAN & Bluetooth M.2 Module;Sparklan;R9701810011;IEEE802.11a/b/g/n/ac;2.412GHz~2.4835GHz, 5.15GHz~5.85GHz;M.2 2230;.;3.3V;22*30*2.15mm;QCNFA364A;QCA6174A-5;2x2 MIMO;Dual Band;WCBN808A-Q2;CCL;CCL;RoHS
Antenna	32505-000900-100-RS**	External Antenna;WLAN;RG 178;108MM;TANK-700-QM67-R10;PEAK GAIN 2.0DBI;Exceltek;2.4-2.5GHz/5.15-5.85GHz;REVERSE SMA PLUG;RoHS
RF Cable	32501-004000-100-RS**	RF;RF CABLE;LINE DIAMETER:0.81mm;250MM;;;50Ω;Sparklan;0-6GHz;VSWR≤1.3;I-PEX MHF-4 Plug;REVERSE SMA JACK;NUT*1;WASHER*1;;RoHS
DIO Cable	32231-000300-100-RS	FLAT CABLE;DIO CABLE;;2;50MM;28AWG;(A)D-SUB 9P FEMALE;(B)DU PONT 2*5P P=2.0 FEMALE, RoHS
COM Cable	32205-007500-200-RS	FLAT CABLE;RS-232/422/485;COM CABLE;2;50mm;28AWG;(A)D-SUB 9P MALE;(B)DU PONT 2*5P P=2.0 FEMALE, RoHS
USB Cable	32001-000800-300-RS***	ROUND CABLE;USB CABLE;;2;150MM;28AWG;(A)DOUBLE LAYER USB A TYPE FEMALE(WITH EAR);(B)DU PONT 2*4P P=2.0 FEMALE, RoHS
HDD Drive Bay	ITG-HB-R10***	HDD Bay for ITG-100 only
Exp. Chassis	ITG-EXP-R10	Expansion Chassis for ITG-100 only
Adapter	63040-010036-210-RS****	Adapter Power;FSP;FSP036-RHBN3;9NA0362707;;Vin:90 ~ 264VAC;36W;Dim:37.8*89.8*27.0mm;Plug=7.5mm;Cable=1500mm;Erp(NO LOAD 0.075W);Vout:12VDC;Φ2.5/Φ5.5/lock;CCL;RoHS
Power Cable	32102-045700-100-RS ****	WIRE CABLE;POWER CABLE;;2;200mm;18AWG;(A)DC JACK 5.5*2.5;(B)TERMINAL BLOCK 2P P=3.5 180°, RoHS
Power Cord	32702-000400-200-RS	European power cord
OS:Windows Embedded 10	ITG-100-W10E64-E-R10	OS Image with Windows® 10 IoT Enterprise Entry 64-bit for ITG-100-AL Series, with DVD-ROM, RoHS

* It is just a general P/N. Please contact your sales representatives to assist you in ordering.
** Each Wi-Fi module needs two antennas and two RF cables to fully support Wi-Fi function.
*** This USB cable cannot be used at the layer where the HDD drive bay is located.
**** It is required to order Power Cable together with Adapter for power usage.

Packing List

1 x SATA cable & SATA power cable (for ITG-100-AL-E1 only)	1 x Screw kit	1 x Mounting bracket	1 x RJ-45 to DB-9 COM port cable

uIBX-250-BW

Ultra Compact Size

Features

- Fanless system with Intel® Celeron® N3160 processor
- Dual display
- Two RS-232/422/485
- Full-size PCIe Mini slot for expansion
- Four USB 3.2 Gen 1 (5Gb/s) ports
- Two GbE LAN ports





Smart Mounting Design

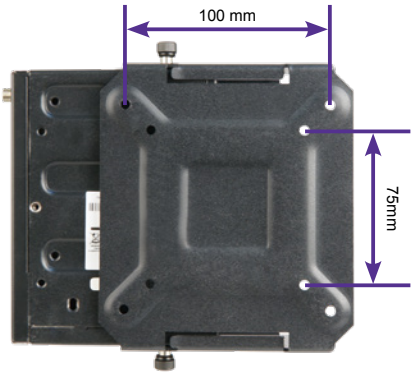

uIBX-KIT-R10

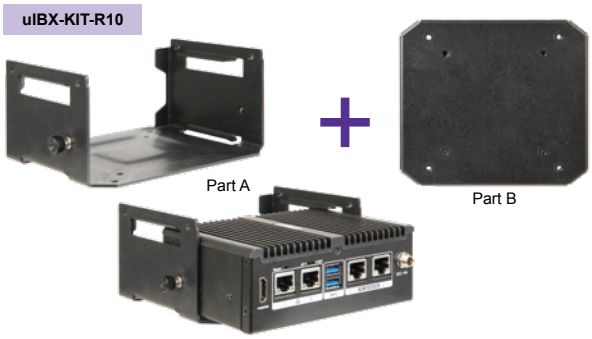

A. Wall mount



Assemble the uIBX-250 with the uIBX-KIT-R10 on the back of monitor.

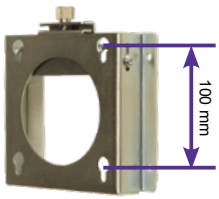

AFLWK-12/AFLWK-19

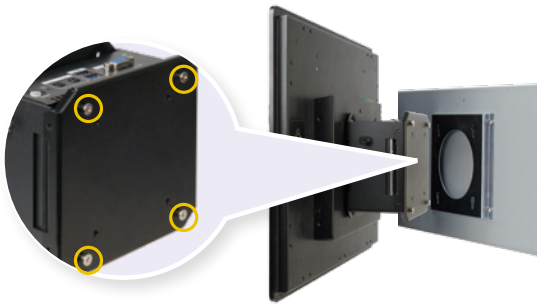

The monitor with the uIBX-250 can be mounted on the wall easily and support VESA 75/100.

B. VESA mount 75/100

Step.1



Install the part A of the uIBX-KIT on the back of the monitor compliant with VESA 75/100.

Step.2

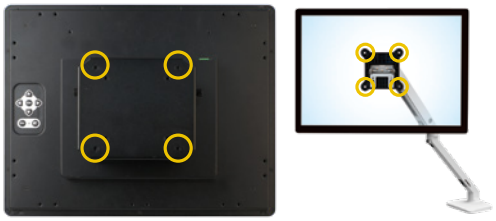

Assemble the uIBX-250 and the part B of the uIBX-KIT. Then, it can be mounted onto any devices with VESA 75/100 interface.



The position of the uIBX-250 could be adjusted to best fit your applications.
Space can be greatly saved by mounting on the back of monitor.

Specifications

Model Name		uIBX-250-BW
Chassis	Color	Black
	Dimensions (WxDxH) (mm)	137 x 102.8 x 52
	System Fan	Fanless
	Chassis Construction	Extruded aluminum alloy
Motherboard	CPU	Intel® Celeron® N3160 1.6 GHz (up to 2.24 GHz, quad-core, TDP 6W)
	Chipset	SoC
	System Memory	
Storage	Hard Drive	1 x 2.5'' SATA 6Gb/s HDD/SSD bay
I/O Interfaces	USB	4 x USB 3.2 Gen1
	Ethernet	2 x RJ-45: 2 x GbE by Intel® I211
	COM Port	2 x RS232/422/485 with AFC (RJ-45)
	Display	1 x HDMI (up to 3840 x 2160@30Hz) 1 x VGA (up to 1920 x 1080@60Hz)
	Audio	1 x Line-out, 1 x Line-in
	Wireless	1 x 802.11a/b/g/n/ac (optional)
	Other	1 x Power Button, 1 x Reset Button, 1 x AT/ATX Switch, 1 x LED for HDD (Green)
Expansions	PCIe Mini	1 x Full-size (PCIe/USB 2.0/SATA)
Power	Power Input	DC Jack: 12V DC
	Power Consumption	12V @ 2A (Intel® Celeron® N3160 with 2GB memory)
Reliability	Mounting	Wall-mount/ VESA 75
	Operating Temperature	-20°C ~ 60°C with air flow (SSD), 10% ~ 95% non-condensing
	Storage Temperature	-20°C ~ 80°C with air flow (SSD), 10% ~ 90% non-condensing
	Operating Shock	Half-sine wave shock 5G, 11ms, 100 shocks per axis (SSD)
	Operating Vibration	MIL-STD-810G 514.6C-1 (SSD)
	Weight (Net/Gross)	470g/ 1.4kg
	Safety/EMC	CE/ FCC
	Watchdog Timer	Programmable 1 ~ 255 sec/min
OS	Supported OS	Microsoft® Windows 8, Microsoft® Embedded Standard 7 E

Dimensions *(Unit: mm)*

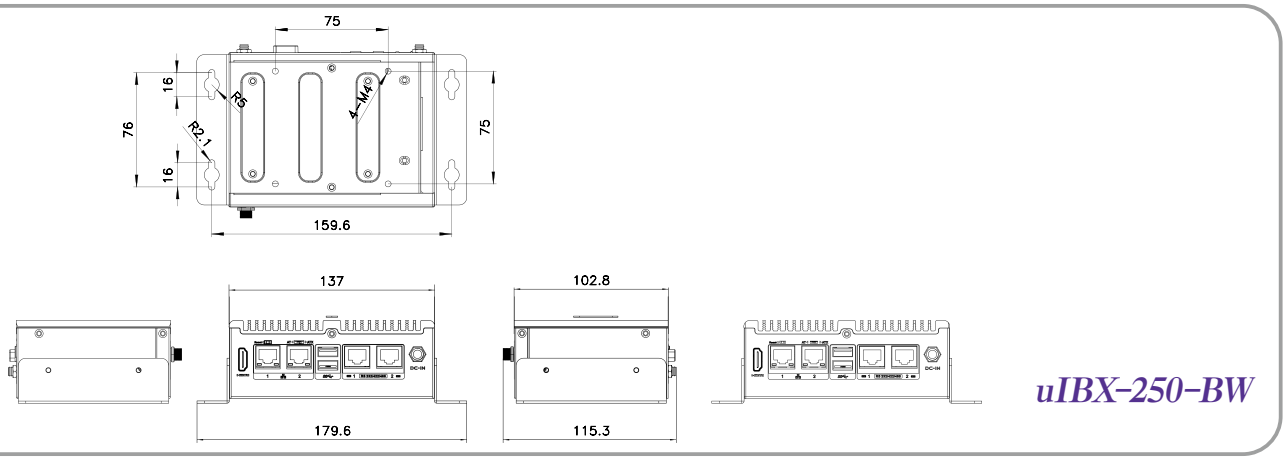

Ordering Information

Part No.	Description
uIBX-250-BW-N3/2G-R21	Fanless embedded system with Intel® Celeron® N3160 1.6 GHz (up to 2.24 GHz, quad core, TDP 6 W), 2 GB DDR3L pre-installed memory, 12V DC, with RS-232/422/485, USB 3.2 Gen 1 (5Gb/s), VGA/HDMI, dual Intel® PCIe GbE, RoHS

Options

Part No.	Description
EMB-WIFI-KIT01-R20	1T1R Wi-Fi module kit for embedded system, IEEE802.11a/b/g/n/ac WiFi with Bluetooth 4.0/3.0+HS, 1 x Wi-Fi module, 2 x 250mm RF cable, 2 x Antenna, RoHS
DK-75-R10	VESA 75 to DIN-Rail mounting kit
uIBX-KIT-R10	uIBX smart mounting kit for monitor and stand
uIBX-250-BW-WES7E64-R10	OS image with Windows® Embedded Standard 7 E 64-bit for uIBX-250, DVD-ROM, RoHS

Packing List

1 x Power Adapter	1 x Mounting Bracket	2 x RS-232/422/485 Round Cable

Digital Signage Solution



IDS Series

Multiple screens can be connected to IEI digital signage series to display information like flight information at airports, in-store advertising, restaurant menu or movie showtimes. These digital signage players are in compact size with high resolution, stable and easy to install. They are equipped with multiple HDMI ports for a variety of video display monitors. It's the best choice for you to implement it in digital signage and video wall applications.

Key Features

■ Ultra HD

Display approaching 4K2K resolution. Best for high-definition screen.
Triple display port:

- 3 x HDMI 3840 x 2160 @30Hz



■ Hardware Expansion

The M.2 A-key & PCIe Mini slots are reserved for Wi-Fi, 3G/4G or mSATA modules, and also support SATADOM for storage to achieve flexible application. Users can quickly replace the modules inside by simply opening the bottom panel of the chassis. Such a design can produce huge benefits for those who need quick response and efficient services.



■ Thin Appearance

The minimum dimension of IDS-310 is 137 x 102.8 x 38.1 (mm) which can be installed in a limited space and saves more space.



■ Mounting Method

The series has passed shock and vibration test based on the MIL-STD-810G standard.

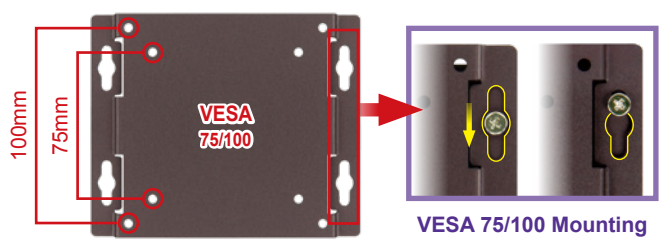

Digital Signage Embedded System



New





Model Name		IDS-310AI	IDS-310-AL-N1	IDS-310-AL-J1
Chassis	Color	Brown & Sliver	Brown & Sliver	Brown & Sliver
	Dimensions (WxDxH)(mm)	137 x 102.8 x 49.2	137 x 102.8 x 38.1	137 x 102.8 x 52.1
	System Fan	Fanless	Fanless	Fanless
	Chassis Construction	Extruded aluminum alloy	Extruded aluminum alloy	Extruded aluminum alloy
Motherboard	CPU	Intel® Celeron® J3455 1.5GHz (up to 2.3GHz, quad-core, TDP 10W)	Intel® Celeron® N3350 1.1GHz (up to 2.4GHz, dual-core, TDP 6W)	Intel® Celeron® J3455 1.5GHz (up to 2.3GHz, quad-core, TDP 10W)
	Chipset	SoC	SoC	SoC
	System Memory	1 x SO-DIMM DDR3L (8GB pre-installed)	1 x SO-DIMM DDR3L (4GB pre-installed)(up to 8GB)	1 x SO-DIMM DDR3L (4GB pre-installed)(up to 8GB)
Storage	Hard Drive	Pre-installed 128GB SATADOM	1 x SATA 6Gb/s connector	1 x SATA 6Gb/s connector
	Micro SD	1 x Micro SD slot	1 x Micro SD slot (optional)	1 x Micro SD slot (optional)
I/O Interfaces	USB	3 x USB 3.2 Gen1	3 x USB 3.2 Gen1	3 x USB 3.2 Gen1
	Ethernet	2 x RJ-45: 2 x GbE by RTL8111	2 x RJ-45: 2 x GbE by RTL8111	2 x RJ-45: 2 x GbE by RTL8111
	RS-232/422/485	1 x RS-232/422/485 with AFC	1 x RS-232/422/485 with AFC	1 x RS-232/422/485 with AFC
	Display	3 x HDMI 1.4b (3840 x 2160@30Hz)	3 x HDMI 1.4b (3840 x 2160@30Hz)	3 x HDMI 1.4b (3840 x 2160@30Hz)
	Audio	1 x Line-out, 1 x Mic-in	1 x Line-out, 1 x Mic-in	1 x Line-out, 1 x Mic-in
	Wireless	1 x 802.11 a/b/g/n/ac (optional)	1 x 802.11 a/b/g/n/ac (optional)	1 x 802.11 a/b/g/n/ac (optional)
	TPM	1 x TPM2.0	Optional	Optional
Expansions	PCIe Mini	Pre-installed Mustang-MPCIE-MX2 AI accelerator card	1 x Full-size with SIM card slot (PCIe/USB2.0/SATA)	1 x Full-size with SIM card slot (PCIe/USB2.0/SATA)
	M.2	1 x 2230 A-key (PCIe x1/USB 2.0)	1 x 2230 A-key (PCIe x1/USB 2.0)	1 x 2230 A-key (PCIe x1/USB 2.0)
Power	Power Input	DC Jack: 12V DC	DC Jack: 12V DC	DC Jack: 12V DC
	Power Consumption	12V @ 2.6A (Intel® Celeron® J3455 with 8GB memory)	12V @ 1.9A (Intel® Celeron® N3350 with 4GB memory)	12V @ 2.2A (Intel® Celeron® J3455 with 4GB memory)
Reliability	Mounting	Wall mount	VESA 75/100/Wall mount (optional)	VESA 75/100/Wall mount (optional)
	Operating Temperature	-20°C ~ 45°C with air flow, 10% ~ 95% non-condensing	-20°C ~ 60°C with air flow (mSATA), 10% ~ 95% non-condensing	-20°C ~ 60°C with air flow (mSATA), 10% ~ 95% non-condensing
	Storage Temperature	-30°C ~ 80°C with air flow, 10% ~ 90% non-condensing	-30°C ~ 80°C with air flow, 10% ~ 90% non-condensing	-30°C ~ 80°C with air flow, 10% ~ 90% non-condensing
	Operating Shock	Half-sine wave shock 5G, 11ms, 100 shocks per axis (SATADOM)	Half-sine wave shock 5G, 11ms, 100 shocks per axis (mSATA)	Half-sine wave shock 5G, 11ms, 100 shocks per axis (mSATA)
	Operation Vibration	MIL-STD-810G 514.6C-1 (SATADOM)	MIL-STD-810G 514.6C-1 (mSATA)	MIL-STD-810G 514.6C-1 (mSATA)
	Weight (Net/ Gross)	910g/1.7 kg	680g/1.4kg	950g/1.7kg
	Safety / EMC	CE/FCC Class A	CE/FCC Class A/BSMI	CE/FCC Class A/BSMI
	Watchdog timer	Programmable 1~255 sec/min	Programmable 1~255 sec/min	Programmable 1~255 sec/min
OS	Supported OS	Microsoft® Windows® 10, Linux	Microsoft® Windows® 10, Linux	Microsoft® Windows® 10, Linux

IDS-310AI

- *Ultra Compact Size*
- *Fanless Digital Signage System*
- *Intel Vision Accelerator Design for AI Deep Learning*

New



Features

- Intel® Celeron® J3455 1.5GHz (up to 2.3 GHz)
- Two GbE LAN ports
- Triple USB 3.2 Gen1
- M.2 A-key slot for expansion
- Pre-installed a Mustang-MPCIE-MX2 that has two Intel Myriad X VPUs for AI deep learning workload consolidation



Application

The IDS-310AI is pre-installed with a Mustang-MPCIE-MX2 AI accelerator card, which includes two Intel® Movidius™ Myriad™ X VPU, to provide a flexible AI inference solution.

VPU is short for vision processing unit. It can run AI faster, and is well suited for low power consumption applications such as surveillance, retail and transportation. With the advantage of power efficiency and high performance to dedicate Deep Neural Networks (DNN) topologies, it is perfect to be implemented in AI edge computing device to reduce total power usage, providing longer duty time for the rechargeable edge computing equipment.



Surveillance



Retail



Transportation

Key Features of Intel® Movidius™ Myriad™ X VPU

- Native FP16 support
- Rapidly port and deploy neural networks in Caffe and Tensorflow formats
- End-to-End acceleration for many common deep neural networks
- Industry-leading Inferences/S/Watt performance

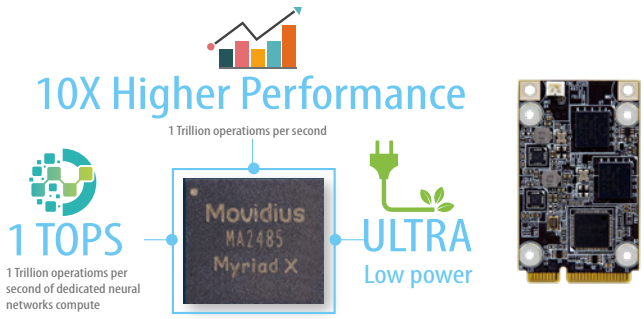

Ultra-compact Size

Space limitation is one of the constraints commonly seen in today's industrial environment. Under tight restrictions, the IDS-310AI not only provides palm-sized design to meet the space requirement, but also comes with adequate basic I/O interfaces for various applications.



Specifications

Model Name		IDS-310AI
AI Accelerator Card	Model Name	Mustang-MPCIE-MX2
	Main Chip	2 x Intel® Movidius™ Myriad™ X MA2485 VPU
	Supported Topology	AlexNet, GoogleNetV1/V2, Mobile_SSD, MobileNetV1/V2, MTCNN, Squeezenet1.0/1.1, Tiny Yolo V1 & V2, Yolo V2, ResNet-18/50/101
Chassis	Color	Brown & Silver
	Dimensions (WxDxH)(mm)	137 x 102.8 x 49.2
	System Fan	Fanless
	Chassis Construction	Extruded aluminum alloy
Motherboard	CPU	Intel® Celeron® J3455 (up to 2.3GHz, quad-core, TDP 10W)
	Chipset	SoC
	System Memory	1 x 204-pin DDR3L SO-DIMM slot, pre-installed with 8 GB memory
Storage	SATADOM	Pre-installed 128GB
	Micro SD	1 x Micro SD Slot
I/O Interfaces	USB 3.2 Gen 1 (5Gb/s)	3
	Ethernet	2 x RJ-45 PCIe GbE by RTL8111 controller
	COM Port	1 x RS-232/422/485 with AFC
	Display	3 x HDMI 1.4b (3840x2160@30Hz)[1, 2]
	Audio	1 x Line-out, 1 x Mic-in
	Wireless	1 x 802.11a/b/g/n/ac (optional)
	TPM	TPM2.0
	Others	1 x Power button, 1 x Reset button, 1 x AT/ATX switch, 1 x LED for HDD (yellow), 1 x LED for power (green)
Expansions	M.2	1 x 2230 A key (PCIe x1/ USB 2.0)
Power	Power Input	DC Jack: 12V DC (9 ~ 36V DC BOM optional)[3]
	Power Consumption	12V @ 2.6A (Intel® Celeron® J3455 with 8GB memory)
Reliability	Mounting	Wall mount
	Operating Temperature	-20°C ~ 45°C with air flow, 10% ~ 95%, non-condensing
	Storage Temperature	-30°C ~ 80°C with air flow, 10% ~ 90%, non-condensing
	Operating Shock	Half-sine wave shock 5G, 11ms, 100 shocks per axis, IEC68-2-27
	Operation Vibration	MIL-STD-810G 514.6C-1
	Weight (Net/Gross)	910 g/ 1.7 kg
	Safety / EMC	CE/FCC
	Watchdog Timer	Programmable 1 ~ 255 sec/min
OS	Supported OS	Win10/Linux

1. Due to chipset limitation, audio is not supported over the HDMI3 connector.
2. Fully support of triple 4K display output may vary in different system environment setting. Contact an IEI sales representative for detailed information.
3. By order production, MOQ:100

Ordering Information

Part No.	Description
IDS-310AI-AL-J1/8GB-R10	Fanless embedded system with Intel® Celeron® J3455 1.5GHz (up to 2.3GHz, quad dore, TDP 10W), pre-installed 8GB DDR3L memory, triple HDMI display, 12V DC, 128G SATADOM, Mustang-MPCIE-MX2 and RoHS

Options

Item	Part No.	Description
Wi-Fi Module	27319-000009-RS*	Wireless Lan Module;Wireless LAN & Bluetooth M.2 Module;Sparklan;R9701810011;IEEE802.11a/b/g/n/ac;2.412GHz~2.4835GHz, 5.15GHz~5.85GHz;M.2 2230;.;3.3V;22*30*2.15mm;QCNFA364A;QC A6174A-5;2x2 MIMO;Dual Band;WCBN808A-Q2;CCL;CCL;RoHS
Antenna	32505-000900-100-RS*	External Antenna;WLAN;RG 178;108MM;TANK-700-QM67-R10;PEAK GAIN 2.0DBI;Exceltek;2.4-2.5GHz/5.15-5.85GHz;REVERSE SMA PLUG;RoHS
RF Cable	32501-004000-100-RS*	RF;RF CABLE;LINE DIAMETER:0.81mm;250MM ;;;50Ω;Sparklan;0-6GHz;VSWR≤1.3;I-PEX MHF-4 Plug;REVERSE SMA JACK;NUT*1;WASHER*1;;RoHS

* Each Wi-Fi module needs two antennas and two RF cables to fully support Wi-Fi function.

Fully Integrated I/O

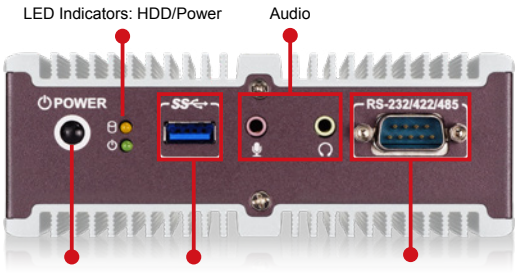

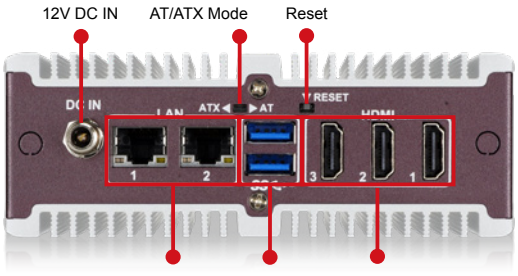

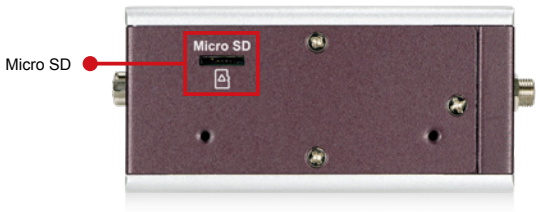

Dimensions (Unit: mm)

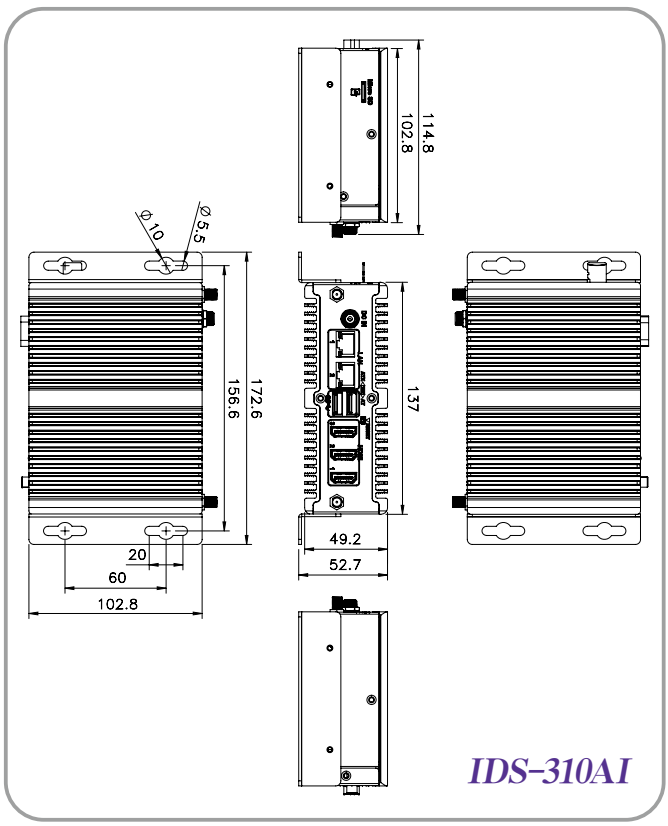

Packing List

1 x Screw kit	1 x 36W power adapter
1 x Wall mounting bracket	1 x Power Cord

IDS-310-AL

- *Digital Signage System*
- *Ultra Compact Size*

Features

- Triple HDMI displays up to 4K resolution
- Two GbE LAN ports
- Full-size PCIe Mini slot and M.2 A-key slot for expansion





Specifications

Model Name		IDS-310-AL-N1	IDS-310-AL-J1
Chassis	Color	Brown & Silver	
	Dimensions (WxDxH)(mm)	137 x 102.8 x 38.1	137 x 102.8 x 52.1
	System Fan	Fanless	
	Chassis Construction	Extruded aluminum alloys	
Motherboard	CPU	Intel® Celeron® N3350 1.1GHz (up to 2.4GHz, dual-core, TDP 6W)	Intel® Celeron® J3455 1.5GHz (up to 2.3GHz, quad-core, TDP 10W)
	Chipset	SOC	
	System Memory	1 x SO-DIMM DDR3L (4GB pre-installed)(up to 8GB)	
Storage	Hard Drive	1 x SATA 6Gb/s connector	
	Micro SD	1 x Micro SD slot (optional)	
I/O Interfaces	USB	3 x USB 3.2 Gen1	
	Ethernet	2 x RJ-45: 2 x GbE by RTL8111	
	COM Port	1 x RS-232/422/485 with AFC	
	Display	3 x HDMI 1.4b (3840x2160@30Hz)[1, 2]	
	Audio	1 x Line-out, 1 x Mic-in	
	Wireless	1 x 802.11 a/b/g/n/ac (optional)	
	TPM	1 x TPM 2.0 (optional)	
Expansions	PCIe Mini	1 x Full-size with SIM card slot (PCIe/USB 2.0/SATA)	
	M.2	1 x 2230 A-key (PCIe x1/USB 2.0)	
Power	Power Input	DC Jack: 12V DC (9 ~ 36V DC BOM optional)[3]	
	Power Consumption	12V @ 1.9A (Intel® Celeron® N3350 with 4GB memory)	12V @ 2.2A (Intel® Celeron® J3455 with 4GB memory)
Reliability	Mounting	VESA 75/100/Wall mount(optional)	
	Operating Temperature	-20°C ~ 60°C with air flow (mSATA), 10% ~ 95% non-condensing	
	Storage Temperature	-30°C ~ 80°C with air flow (mSATA), 10% ~ 95% non-condensing	
	Operating Shock	Half-sine wave shock 5G, 11ms, 100 shocks per axis (mSATA)	
	Operation Vibration	MIL-STD-810G 514.6C-1 (mSATA)	
	Weight (Net/Gross)	680g/1.4kg	950g/1.7kg
	Safety / EMC	CE/FCC Class A/BSMI	
	Watchdog Timer	Programmable 1 ~ 255 sec/min	
OS	Supported OS	Microsoft® Windows® 10, Linux	

1. Due to chipset limitation, audio is not supported over the HDMI3 connector.
2. Fully support of triple 4K display output may vary in different system environment setting. Contact an IEI sales representative for detailed information.
3. By order production, MOQ:100

Fully Integrated I/O

Front View

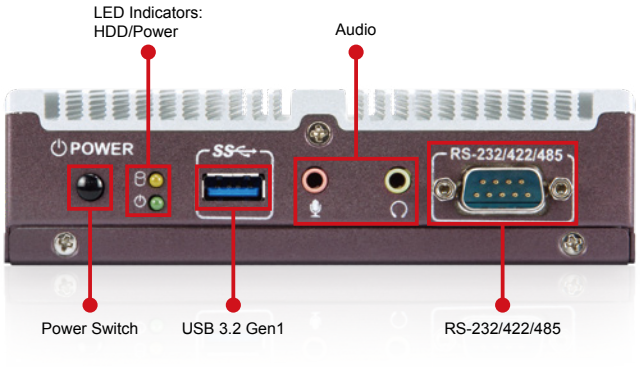

Rear View

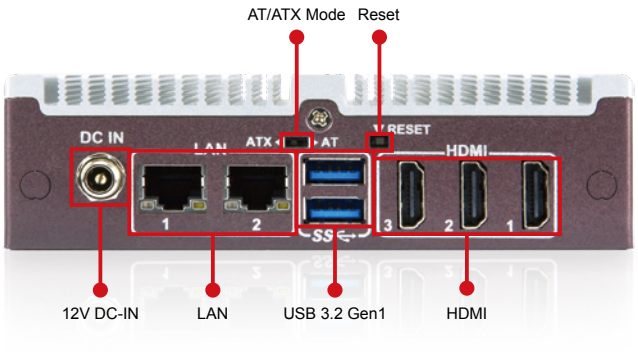

Dimensions (Unit: mm)

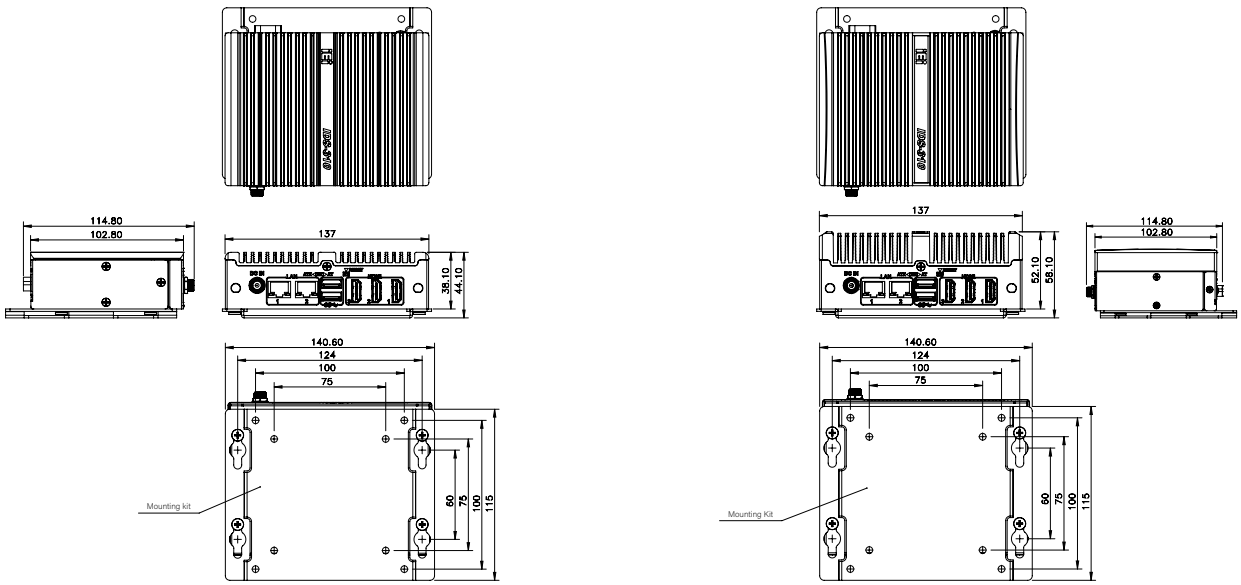

IDS-310-AL-N1 IDS-310-AL-J1

Ordering Information

Part No.	Description
IDS-310-AL-J1/4GB-R10	Fanless embedded system with Intel® Celeron® J3455 1.5GHz (up to 2.3GHz, quad dore, TDP 10W), pre-installed 4GB DDR3L memory, triple HDMI display, 12V DC and RoHS
IDS-310-AL-N1/4GB-R10	Fanless embedded system with Intel® Celeron® N3350 1.1GHz (up to 2.4GHz, dual dore, TDP 6W), pre-installed 4GB DDR3L memory, triple HDMI display, 12V DC and RoHS

Options

Part No.		Description
Wi-Fi Module	27319-000009-RS*	Wireless Lan Module;Wireless LAN & Bluetooth M.2 Module;Sparklan;R9701810011;IEEE802.11a/b/g/n/ac;2.412GHz~2.4835GHz, 5.15GHz~5.85GHz;M.2 2230;.;3.3V;22*30*2.15mm;QCNFA364A;QCA6174A-5;2x2 MIMO;Dual Band;WCBN808A-Q2;CCL;CCL;RoHS
Antenna	32505-000900-100-RS*	External Antenna;WLAN;RG 178;108MM;TANK-700-QM67-R10;PEAK GAIN 2.0DBI;Exceltek;2.4-2.5GHz/5.15-5.85GHz;REVERSE SMA PLUG;RoHS
RF Cable	32501-004000-100-RS*	RF;RF CABLE;LINE DIAMETER:0.81mm;250MM;;;50Ω;Sparklan;0-6GHz;VSWR≤1.3;I-PEX MHF-4 Plug;REVERSE SMA JACK;NUT x 1;WASHER x 1;;RoHS
OS:Windows Embedded 10	IDS-310-AL-W10E64-E-R10	OS Image with Windows® 10 IoT Enterprise Entry 64-bit 2019 for IDS-310-AL Series, with DVD-ROM, RoHS

* Each Wi-Fi module needs two antennas and two RF cables to fully support Wi-Fi function.

Packing List

1 x VESA 75/100 Mounting Kit	1 x Power Adapter	1x Power Cord

Industrial Computer Chassis

As a leading hardware provider in embedded SBC, IEI offers complete industrial computer chassis from ATX/microATX/Mini-ITX support chassis to 1U~7U chassis to support different embedded single board computers, and provides flexibility and scalability for industrial applications. Customers can choose different platform to integrate and fulfil different demanding application and vertical application.

1. SBC Embedded System





Model Name	ECN-380A Series	ECN-360A Series	ECW-281B Series
MB Model No.	NANO Series (EPIC SBC)*	NANO Series (EPIC SBC)*	WAFER Series (3.5" SBC)*

*Please refer to the ECN & ECW datasheets for the NANO & WAFER support list.

2. Embedded Chassis Series

New




Model Name	BRICK-KINO BRICK-WAFER/NANO	EBC-3220	EBC-3100 / EBC-3000
MB Model No.	KINO Series (Mini-ITX)* WAFER Series (3.5" SBC)* NANO Series (EPIC SBC)*	KINO Series (Mini-ITX)*	KINO Series (Mini-ITX)*





Model Name	EBC-3300	EBC-2200	EBC-2100
MB Model No.	tKINO Series (Mini-ITX)	NANO Series (EPIC SBC)*	NANO Series (EPIC SBC)*

*Please refer to the EBC datasheets for the support list.

3. Industrial Computer Chassis





Model Name	RACK-1150G 1U	RACK-220G 2U 6-slot	RACK-360 4U 14-slot
MB Model No.	Full-size CPU card	Full-size CPU card microATX, Mini-ITX	Full-size CPU card ATX, microATX, Mini-ITX





Model Name	ECA-300	ECA-200	ECA-100
MB Model No.	ATX/mATX	mATX	ATX/mATX





Model Name	PAC-125G 10-slot	PAC-700G 7-slot	PAC-53GH 3-slot
MB Model No.	Full-size CPU card	Half-size CPU card	Half-size CPU card

SBC Embedded System







	Model Name	ECN-380-QM87	ECN-360A-ULT3	ECW-281B-BT
Chassis	Color	Silver	Black	Black
	Dimensions (WxDxH) (mm)	265 x 134 x 56.7	255 x 130 x 75	229 x 132 x 64
	System Fan	Fanless	Fanless	Fanless
	Chassis Construction	Aluminum alloy with heavy duty metal	SECC	Aluminum alloy with heavy duty metal
Motherboard	Motherboard Model	NANO-QM871-i1	NANO-ULT3	WAFER-BT
	SBC Size (mm)	EPIC (165 x 115)	EPIC, 165 x 115	3.5", 146 x 102
	CPU	Intel® Core™ i5-4400E 2.7 GHz Intel® Celeron® 2000E 2.2 GHz	Intel® Core™ i5-6300U Intel® Celeron® 3955U	Intel® Celeron® J1900 quad-core 2.42GHz
	Chipset	Intel® QM87	N/A	SoC
	System Memory	One 204-pin DDR3 4GB SO-DIMM pre-installed (system max: 8GB)	2 x 260-pin 2133/1866 MHz dual-channel DDR4 SO-DIMMs support up to 32GB Pre-install 4GB DDR4	1 x 204-pin 2 GB 1066/1333 MHz single-channel DDR3L SO-DIMM (system max. 4 GB)
IPMI	iRIS Solution	1 x iRIS-1010	N/A	N/A
Storage	Hard Drive	2 x 2.5" SATA 6Gb/s HDD/SSD bay	2 x 2.5" SATA HDD bay (No RAID support)	1 x 2.5" SATA 3Gb/s HDD bay
	CF Card/CFast	N/A	N/A	N/A
I/O Interfaces	USB 3.2 Gen 1	2	4	1
	USB 2.0	4	N/A	3
	Ethernet	2 x RJ-45 LAN1: Intel® I217LM PHY with Intel® AMT 9.0 support LAN2: Intel® I210-AT PCIe controller	LAN1: Intel® I219-LM LAN2: Intel® I211-AT	LAN 1: PCIe GbE by Intel® I210 controller LAN 2: PCIe GbE by Intel® I211 controller
	COM Port	2 x RS-232	1 x RS-232/422/485 2 x RS-232	3 x RS-232 1 x RS-422/485
	Digital I/O	N/A	8-bit digital I/O	8-bit digital I/O (4-bit input, 4-bit output)
	Display	2 x HDMI, 1 x VGA	2 x HDMI	1 x VGA
	Resolution	VGA: Up to 1920x1200@60Hz HDMI: Up to 2500x1600@60Hz	HDMI: up to 4096x2160@24Hz	VGA: 2560x1600@60Hz
	Audio	1 x Line-out, 1 x Mic-in	1 x Line-out	1 x Line out
	Wireless	1 x 802.11b/g/n	2 x 802.11b/g/n (optional)	1 x 802.11b/g/n
Expansions	PCIe Mini	1 x Full-size PCIe Mini (supports mSATA, SATA 6Gb/s signal only) 1 x Half-size PCIe Mini (only for iRIS-1010)	1 x Full-size PCIe Mini card slot (with SIM holder & mSATA support) 1 x Half-size PCIe Mini card slot	1 x Full-size PCIe Mini card slot (supports mSATA) 1 x Half-size PCIe Mini card
Power	Power Input	DC Jack: 12 V DC 3-pin terminal: 9 V~36 V DC	DC 12V (Optional 9~36V) Power 1: DC jack Power 2: Terminal block(for optional 9~36V only)	DC jack: 12 V DC 3-pin terminal: 9 V~36 V DC
	Power Consumption	12 V@4.6 A (Intel® mobile Core™ i5-4400E CPU with 4GB 1333MHz DDR3 memory)	12 V@2.4 A (Intel® i5-6300U with 4GB DDR4 memory)	12V@1.45A (Intel® Celeron® J1900 CPU and one 8 GB 1333 MHz DDR3 memory)
Reliability	Mounting	Wall mount, VESA 100	Wall mount, VESA 100	Wall mount, VESA 100
	Operating Temperature	-20°C ~60°C with air flow (SSD), 10% ~ 95%, non-condensing	-20°C~60°C with air flow (SSD), 5% ~ 95%, non-condensing	-20°C~60°C with air flow (SSD), 10% ~ 95%, non-condensing
	Operating Shock	Half-sine wave shock 5G, 11ms, 3 shocks per axis		Half sine wave 5G, 11ms 3-axis (non-operational)
	Operating Vibration	MIL-STD-810F 514.5C-2 (with SSD)	MIL-STD-810F 514.5C-2 (with SSD)	MIL-STD-810F 514.5C-1 (HDD)
	Weight (Net/ Gross)	2.4 kg/4.2 kg	2.2 kg/3 kg	2.1 kg / 3.9 kg

*Systems with hard drive meet MIL-STD-810F 514.5C-1 specifications. SSD/CF systems meet MIL-STD-810F 514.5C-2 specifications.

ECN-380-QM87

- *Intel® Core™ i5/Celeron® CPU*
- *Triple Video Outputs*



Features

- **Intel® Core™ i5/Celeron® CPU**
  - » Intel® Core™ i5-4400E 2.7 GHz/Celeron® 2000E 2.2 GHz
- **Triple video outputs**
  - » 2 x HDMI + VGA
- **Two 2.5" SATA 6Gb/s HDD/SSD drive bays**

QTS-Gateway IPMI 2.0 Compliant

Fanless Dual LAN Dual HDD Triple Display

Specifications

Model Name		ECN-380-QM87
Chassis	Color	Silver
	Dimensions (WxDxH) (mm)	265 x 134 x 56.7
	System Fan	Fanless
	Chassis Construction	Aluminum alloy with heavy duty metal
Motherboard	Motherboard Model	NANO-QM871-i1
	SBC Size (mm)	EPIC, 165 x 115
	CPU	Intel® mobile Core™ i5-4400E with AMT 9.0 support (up to 2.7GHz, dual-core, 3MB cache, TDP=37W) Intel® mobile Celeron® 2000E (up to 2.2GHz, dual-core, 2MB cache, TDP=37W)
	Chipset	Intel® QM87
	System Memory	One 204-pin 4GB DDR3 SO-DIMM pre-installed (system max: 8GB)
IPMI	iRIS Solution	1 x iRIS-1010 (optional)
Storage	Hard Drive	2 x 2.5" SATA 6Gb/s HDD/SSD drive bay
I/O Interfaces	USB 3.2 Gen 1	2
	USB 2.0	4
	Ethernet	2 x RJ-45 LAN1: Intel® I217LM PHY with Intel® AMT 9.0 support LAN2: Intel® I210-AT PCIe controller
	COM Port	2 x RS-232
	Display	2 x HDMI, 1 x VGA
	Resolution	VGA: Up to 1920 x 1200@60Hz HDMI: Up to 2500 x 1600@60Hz
	Audio	1 x Line-out, 1 x Mic-in
	Wireless	1 x 802.11b/g/n (optional)
Expansions	PCIe Mini	1 x Full-size PCIe Mini (supports mSATA, SATA 6Gb/s signal only)* 1 x Half-size PCIe Mini (only for iRIS-1010)
Power	Power Input	DC jack: 12 V DC 3-pin terminal: 9 V~36 V DC
	Power Consumption	12 V@4.6 A (Intel® mobile Core™ i5-4400E with 4GB 1333MHz DDR3 memory)
Reliability	Mounting	Wall mount, VESA 100
	Operating Temperature	-20°C ~60°C with air flow (SSD), 10% ~ 95%, non-condensing
	Storage Temperature	-30°C ~70°C with air flow (SSD), 10% ~ 95%, non-condensing
	Operating Shock	Half-sine wave shock 5G, 11ms, 3 shocks per axis
	Operating Vibration	MIL-STD-810F 514.5C-2 (with SSD)
	Weight (Net/Gross)	2.4 kg/4.2 kg

* ECN-380-QM87i-WD-QGW without Full-size PCIe Mini Card slot expansion

Removable 2.5" SATA HDD/SSD Bay

Dual HDD

The ECN-380 series is equipped with two 2.5" SATA HDD bays. One of the HDD bays is removable for easy installation.



Triple Display Outputs

Triple Display

The ECN-380-QM87 contains two HDMI and one VGA. All of the display outputs support high resolution video, which can be applied widely in multi-monitor applications.



Fully Integrated I/O

●ECN-380-QM87 Front I/O

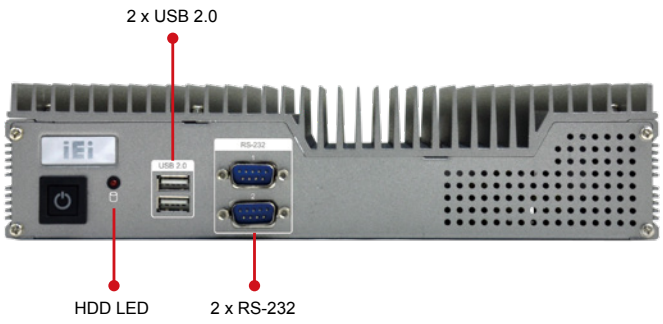

●ECN-380-QM87 Rear I/O

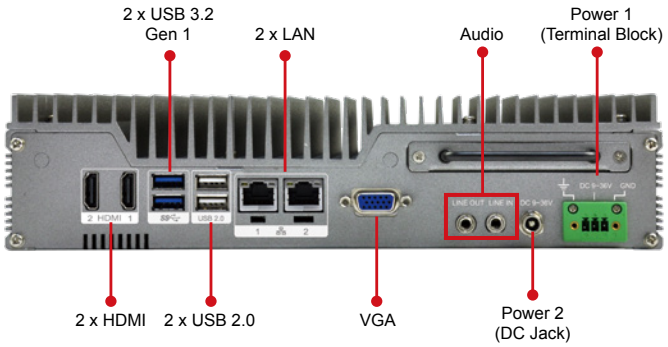

Dimensions *(Unit: mm)*

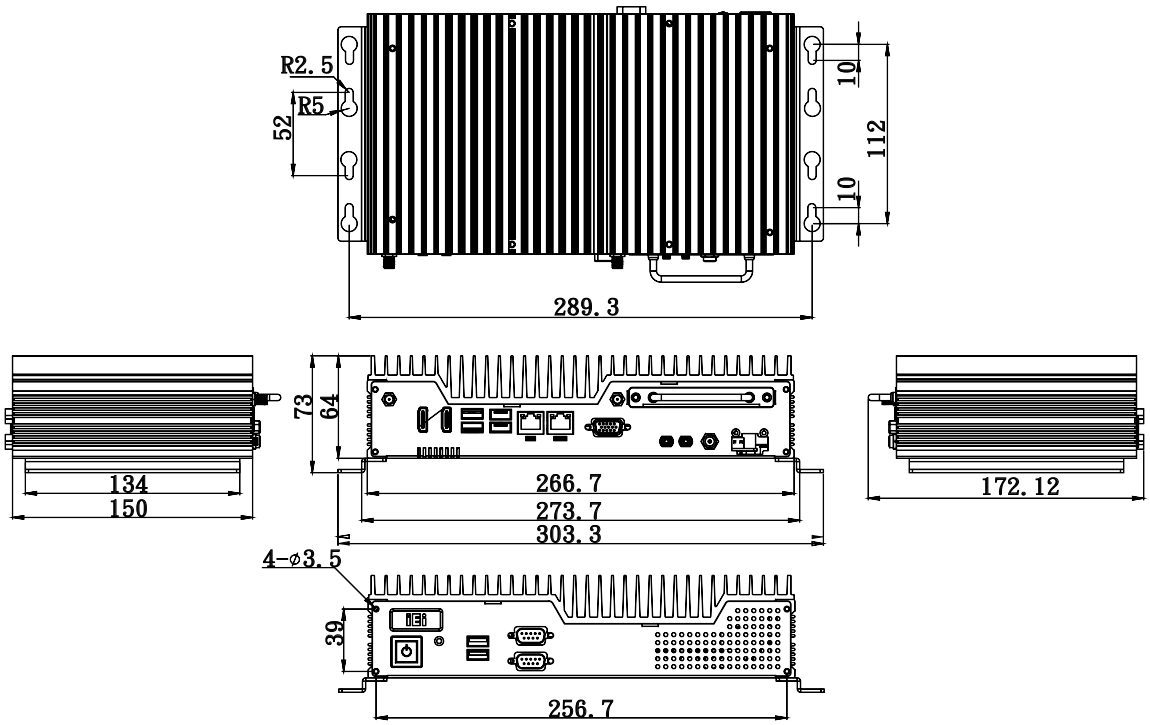

Ordering Information

Part No.	Description
ECN-380-QM87i-C/4G-R11	Fanless embedded system with Intel® Celeron® 2000E 2.2 GHz CPU, TDP 37W, 2 x HDMI, 1 x VGA, 2 x 2.5" SATA HDD bay, 4GB memory pre-installed, iRIS-1010, 12 V DC, RoHS
ECN-380-QM87i-i5/WD/4G-R11	Fanless embedded system with Intel® Core™ i5-4400E 2.7 GHz CPU, TDP 37W, 2 x HDMI, 1 x VGA, 2 x 2.5" SATA HDD bay, 4GB memory pre-installed, iRIS-1010, 9 V~36V DC, RoHS
ECN-380-QM87i-C/WD/4G-R11	Fanless embedded system with Intel® Celeron® 2000E 2.2 GHz CPU, TDP 37W, 2 x HDMI, 1 x VGA, 2 x 2.5" SATA HDD bay, 4GB memory pre-installed, iRIS-1010, 9 V~36 V DC, RoHS

Options

Part No.	Description
iRIS-1010-R10	IPMI 2.0 adapter card with AST1010 BMC chip (W/O KVM over IP function) for PCIe Mini socket interface
ECN380VK-100-R10	VESA 100 mount kit for ECN-380
ECN-380-QM87i-WES7E-R10	OS image with Windows Embedded Standard 7 E for ECN-380-QM87i Series, WES7E license label, with DVD ROM

Packing List

1 x Power cord	1 x Chassis screw set
1 x Power adapter (with PSE/ErP certified)	1 x Wall mount bracket

ECN-360A-ULT3

Fanless Embedded System with Intel® Solution



Features

- **On-board CPU**
  - » i5-6300U dual-core up to 3.0GHz
  - » 3955U dual-Core up to 2.0GHz
- **Two 2.5" SATA 6Gb/s HDD/SSD drive bay**
- **Operating temperature: -20°C ~ 60 °C**
- **Two flexible E-Window for modularized expansion I/O**

E-Window

Fanless | PCIe Mini Expansion | USB 3.2 Gen 1 | Dual GbE | Dual Display

Specifications

Model Name		ECN-360A-ULT3
Chassis	Color	Black
	Dimensions (WxDxH) (mm)	255 x 130 x 75
	System Fan	Fanless
	Chassis Construction	SECC
Motherboard	Motherboard Model	NANO-ULT3
	SBC Size (mm)	EPIC, 165 x 115
	Processor	Intel® Core™ i5-6300U Intel® Celeron® 3955U
	System Memory	2 x 260-pin 2133/1866 MHz dual-channel DDR4 SO-DIMMs support up to 32GB Pre-install 4GB DDR4
Storage	Hard Drive	2 x 2.5" SATA HDD bay(No RAID support)
I/O Interfaces	USB 3.2 Gen 1	4
	Ethernet	LAN1: Intel® I219-LM LAN2: Intel® I211-AT
	COM Port	1 x RS-232/422/485 2 x RS-232
	Digital I/O	8-bit digital I/O
	Display	2 x HDMI
	Resolution	HDMI: up to 4096x2160@24Hz
	Audio	1 x Line-out
	Wireless	2 x 802.11b/g/n (optional)
Expansions	PCIe Mini	1 x Full-size PCIe Mini card slot (with SIM holder & mSATA support) 1 x Half-size PCIe Mini card slot
Power	Power Input	DC 12V (Optional 9~36V) Power 1: DC jack Power 2: Terminal block(for optional 9~36V only)
	Power Consumption	12 V@2.4 A (Intel® i5-6300U with 4GB DDR4 memory)
Reliability	Mounting	Wall mount, VESA 100
	Operating Temperature	-20°C~60°C with air flow (SSD), 5% ~ 95%, non-condensing
	Operating Shock	Half-sine wave shock 5G, 11ms, 3 shocks per axis
	Operating Vibration	MIL-STD-810F 514.5C-2 (SSD)
	Weight (Net/Gross)	2.2 kg/3 kg

*3955U belongs to Skylake ULT Base series CPU, PCIe signal support only PCIe Gen 2

Friendly to Use

Easy for installation

- Flexible I/O function for expansion requirement
- Easy assembly and integration changing with IEI E-winodw tool kit



Fully Integrated I/O

Front view



Rear view

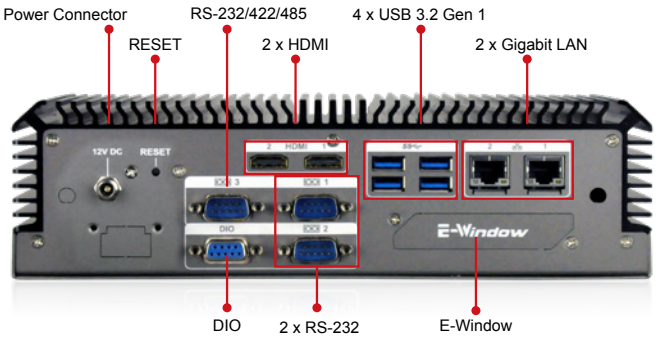

Dimensions *(Unit: mm)*

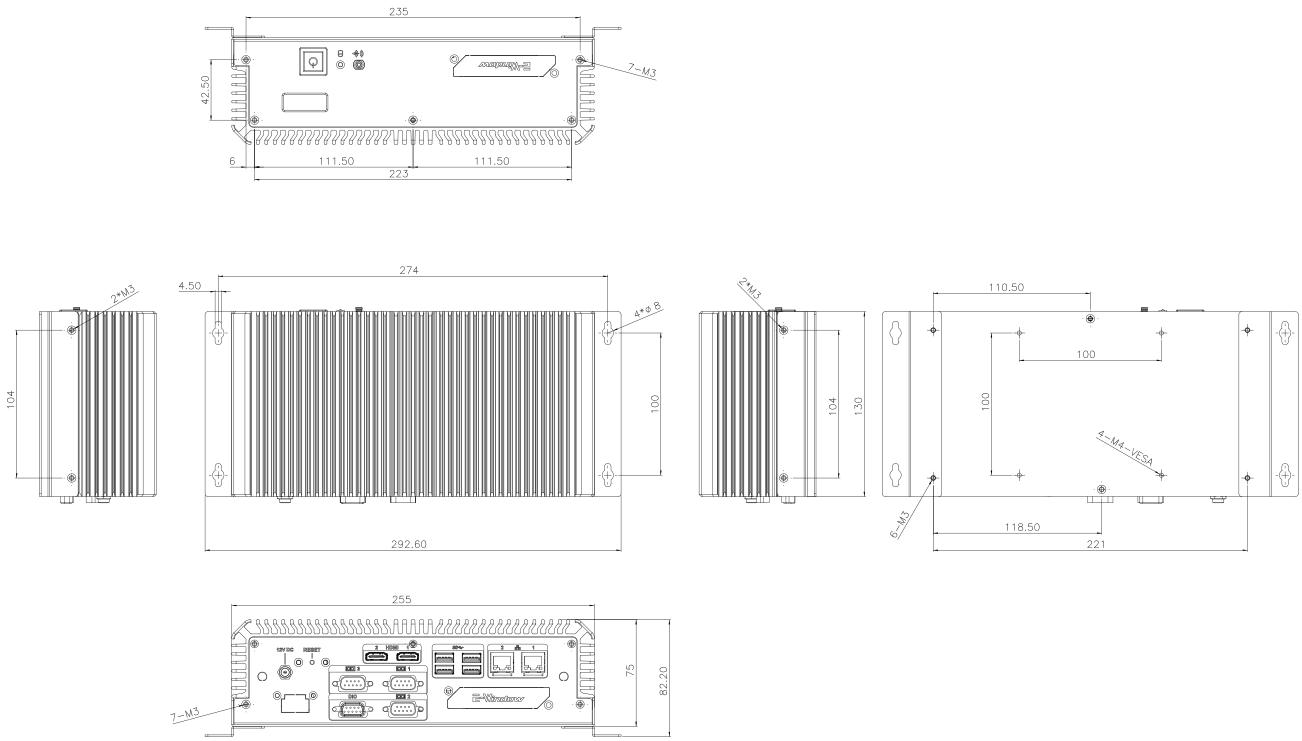

Ordering Information

Part No.	Description
ECN-360A-ULT3-i5/4G-R10	Fanless System with Intel® Core™ i5-6300U up to 3.0GHz, TDP 15W, 2 x GbE LAN port, 2 x HDMI, 2 x 2.5" SATA HDD bay, 4GB memory pre-installed, 12V DC, RoHS
ECN-360A-ULT3-C/4GB-R10	Fanless System with Intel® Celeron® 3955U up to 2.00 GHz, TDP 15W, 2 x GbE LAN port, 2 x HDMI, 2 x 2.5" SATA HDD bay, 4GB memory pre-installed, 12V DC, RoHS
ECN-360A-ULT3-C/WD/4GB-R10	Fanless System with Intel® Celeron® 3955U up to 2.0GHz, TDP 15W, 2 x GbE LAN port, 2 x HDMI, 2 x 2.5" SATA HDD bay, 4GB memory pre-installed, 9~36V DC, RoHS
ECN-360A-ULT3-C/WD/4GB-R10**	Fanless System with Intel® Celeron® 3955U up to 2.0GHz, TDP 15W, 2 x GbE LAN port, 2 x HDMI, 2 x 2.5" SATA HDD bay, 4GB memory pre-installed, 9~36V DC, RoHS
63040-010060-120-RS	FSP060-DIBAN2, 12V 60W AC/DC Adapter
E-MPCIE-LAN03-R10	PCIe mini card supports 1-port GbE with REALTEK RTL8111E controller, with PMS 194C I/O bracket and 150 mm cable
E-MPCIE-DLAN03-R10	PCIe mini card supports PCIe mini card supports 2-port GbE with Intel® I211 controller, with PMS 194C I/O bracket and 150mm cable

**By order production, MOQ: 50

Packing List

1 x Screw set	1 x Wall mount bracket

ECW-281B-BT

Fanless Embedded System with Intel® Celeron® J1900 Processor



Features

- Fanless system with Intel® Celeron® J1900 Processor
- Supports four COM ports (three RS-232, one RS-422/485)
- 12V DC and 9 V~36 V DC models available
- Wide operating temperature: -20°C ~ 60°C with SSD

Specifications

Model Name		ECW-281B-BT
Chassis	Color	Black
	Dimensions (WxHxD) (mm)	229 x 132 x 64
	System Fan	Fanless
	Chassis Construction	Aluminum alloy with heavy duty metal
Motherboard	Motherboard Model	WAFER-BT
	SBC Size (mm)	3.5", 146 x 102
	CPU	Intel® Celeron® J1900 processor (quad-core, 2 MB cache, TDP=10W, up to 2.42GHz)
	Chipset	SoC
	System Memory	1 x 204-pin 1066/1333 MHz single-channel DDR3L SO-DIMM (system max. 8 GB)
Storage	Hard Drive	1 x 2.5" SATA 3Gb/s HDD bay
I/O Interfaces	USB 3.2 Gen 1	1
	USB 2.0	3
	Ethernet	LAN 1: PCIe GbE by Intel® I210 controller LAN 2: PCIe GbE by Intel® I211 controller
	COM Port	3 x RS-232 1 x RS-422/485
	Digital I/O	8-bit digital I/O
	Display	1 x VGA
	Resolution	VGA: Up to 2560x1600@60Hz
	Audio	1 x Line out
	Wireless	1 x 802.11b/g/n (optional)
Expansion	PCIe Mini	1 x Full-size PCIe Mini card slot (supports mSATA)* 1 x Half-size PCIe Mini card
Power	Power Input	DC jack: 12 V DC 3-pin terminal: 9 V~36 V DC
	Consumption	12V@1.45A (with Intel® Celeron® J1900 CPU and one 8 GB 1333 MHz DDR3 memory)
Reliability	Mounting	Wall mount, VESA 100
	Operating Temperature	-20°C~60°C with air flow (SSD), 10% ~ 95%, non-condensing
	Storage Temperature	-20°C ~ 60°C
	Operating Shock	Half sine wave 5G, 11ms 3-axis (non-operational)
	Operating Vibration	MIL-STD-810F 514.5C-1 (HDD)
	Weight (Net/Gross)	2.1 kg / 3.9 kg

*ECW-281BWD-BTi-QGW without Full-size PCIe Mini Card slot expansion

Dimensions *(Unit: mm)*

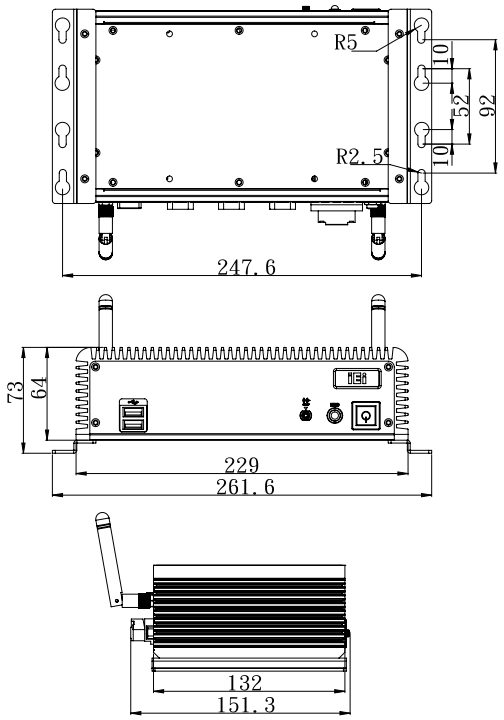

Options

Part No.	Description
ECW-281B-BT-WES7E64-R20	OS Image with Windows® Embedded Standard 7 E 64Bit for ECW-281BT Series, with DVD-ROM, RoHS, R20
DK-100-R10	VESA 100 to DIN-Rail mounting kit

Packing List

1 x Power cord only for 12V	1 x Wall mount bracket
1 x 12V 60W power adapter only for 12V	1 x Screw set

Ordering Information

Part No.		Description
12V DC Input	ECW-281B-BTi-J1/2GB-R20	Fanless embedded system with WAFER-BT-R20, with Intel® Celeron® J1900 2GHz, 4 serial ports, with 2GB DDR3L pre-installed SO-DIMM memory, 12VDC in, 60W power adapter, black, RoHS
9 V~36 V DC Input	ECW-281BWD-BTi-J1/2GB-R20	Fanless embedded system with WAFER-BT-R20, with Intel® Celeron® J1900 2GHz, 4 serial ports, with 2GB DDR3L pre-installed SO-DIMM memory, 9~36VDC in, w/o adapter, black, RoHS

Embedded Chassis Series

New 

New 

Model Name		BRICK-KINO	BRICK-WAFER	BRICK-NANO
Platform		Case only		
Chassis	Color	Black		
	Dimensions (WxDxH) (mm)	203 x 178 x 64	220 x 143 x 55	
	System Fan	N/A	N/A	N/A
	Chassis Construction	N/A	N/A	N/A
Motherboard	Motherboard Model	tKINO-ULT3 KINO-DAL KINO-DBT tKINO-AL tKINO-BW eKINO-BT	WAFER-AL WAFER-BT-E38001W2	NANO-AL NANO-BT
	SBC Size (mm)	Mini-ITX (170 x 170)	3.5" (146 x 102)	3.5" (165 x 115)
Button		Power switch		
Reliability	Operating Temperature	0°C ~ 40°C		
	Operating Shock	Half-sine wave 3G, 11ms 3 shocks per axis		
	Operating Vibration	MIL-STD-810F 514.5C-1		
	Weight (Net/ Gross)	1.25kg/1.5kg	1.2kg/1.5kg	

BRICK Series

Embedded Chassis for IEI DC Input Mini-ITX/EPIC/3.5" SBC

New



▼ BRICK Chassis with WAFER-AL (SBC not included)

▲ BRICK Chassis with eKINO-BT (SBC not included)

Features

- Designed for Mini-ITX / EPIC / 3.5" SBC with DC input
- Flexible SBC compatibility
- One 2.5" hard drive capacity
- Cost-effective, RoHS compliant design

Specifications

Model Name		BRICK-KINO	BRICK-WAFER	BRICK-NANO
Platform		Case only		
Chassis	Color	Black		
	Dimensions (WxDxH) (mm)	203 x 178 x 64	220 x 143 x 55	220 x 143 x 55
Motherboard	Motherboard Model	tKINO-ULT3 KINO-DAL KINO-DBT tKINO-AL tKINO-BW eKINO-BT	WAFER-AL WAFER-BT-E38001W2	NANO-AL NANO-BT
	SBC Size (mm)	Mini-ITX (170 x 170)	3.5" (146 x 102)	3.5" (165 x 115)
Button		Power switch		
Reliability	Operating Temperature	0°C ~ 40°C	0°C ~ 40°C	0°C ~ 40°C
	Storage Temperature	Refer to the Motherboard Spec.		
	Weight (Net/Gross)	1.25kg/1.5kg	1.2kg/1.5kg	1.2kg/1.5kg

BRICK-NANO/WAFER Dimensions *(Unit: mm)*

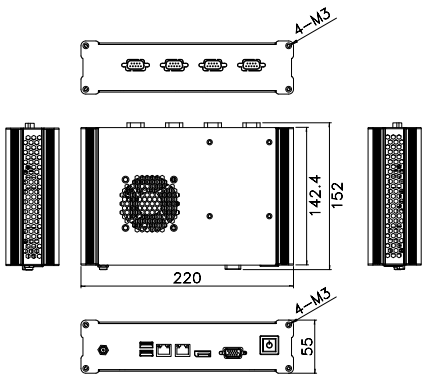

BRICK-KINO Dimensions *(Unit: mm)*

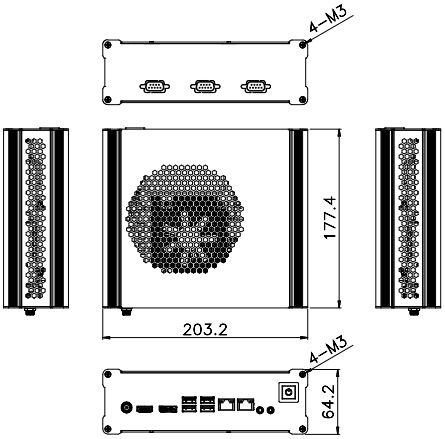

Ordering Information

Part No.	Description
BRICK-KINO-DAL-R10	Embedded chassis for KINO-DAL SBC, with IO bracket, power switch, mat black and RoHS
BRICK-KINO-DBT-R10	Embedded chassis for KINO-DBT SBC, with IO bracket, power switch, mat black and RoHS
BRICK-eKINO-BT-R10	Embedded chassis for eKINO-BT SBC, with IO bracket, power switch, mat black and RoHS
BRICK-tKINO-AL-R10	Embedded chassis for tKINO-AL SBC, with IO bracket, power switch, mat black and RoHS
BRICK-tKINO-BW-R10	Embedded chassis for tKINO-BW SBC, with IO bracket, power switch, mat black and RoHS
BRICK-tKINO-ULT3-R10	Embedded chassis for tKINO-ULT3 SBC, with IO bracket, power switch, mat black and RoHS
BRICK-WAFER-AL-R10	Embedded chassis for WAFER-AL SBC, with SATA cable, IO bracket, power switch, DC input cable, mat black and RoHS
BRICK-WAFER-BT-E38001W2-R10	Embedded chassis for WAFER-BT-E38001W2 series SBC, with SATA cable, IO bracket, power switch, DC input cable, mat black and RoHS
BRICK-NANO-AL-R10	Embedded chassis for NANO-AL SBC, with SATA cable, IO bracket, power switch, DC input cable, mat black and RoHS
BRICK-NANO-BT-R10	Embedded chassis for NANO-BT SBC, with SATA cable, IO bracket, power switch, DC input cable, mat black and RoHS

Packing List

BRICK-KINO	1 x BRICK chassis	1 x Power switch cable	1 x Screw set	1 x QIG	
BRICK-WAFER/NANO	1 x BRICK chassis	1 x Power switch cable	1 x Screw set	1 x QIG	1 x SATA cable

Embedded Chassis Series







	Model Name	EBC-3300	EBC-3220	EBC-3100
	Platform	Case only	Case only	Case only
Chassis	Color	Black	Black	Black
	Dimensions (WxDxH) (mm)	190 x 190 x 43	190 x 180 x 55	260 x 250 x 156
	System Fan	--	1 x 4 cm	1 x 8 cm
	Chassis Construction	Heavy duty metal	Heavy duty metal	Heavy duty metal with plastic front panel
Motherboard	Motherboard Model	EBC-3300-AL-R10 :tKINO-AL EBC-3300-BW-R10: tKINO-BW	tKINO-BW KINO-DQM170 KINO-DH810 KINO-DBT eKINO-BT KINO-DA750-i2 KINO-V1000/R1000 KINO-DH310 KINO-DH110 KINO-DAL tKINO-AL tKINO-ULT3 KINO-KBN/SE-i2 KINO-DQM871-i1 KINO-DH610 KINO-QM770 KINO-QM670 KINO-QM57A KINO-HM551	KINO-AQ170 KINO-ABT KINO-AA750-i2 KINO-AQ870 KINO-AQ670 KINO-AH611 KINO-AH612
	SBC Size (mm)	Mini-ITX (170 x 170)	Mini-ITX (170 x 170)	Mini-ITX (170 x 170)
Storage	Hard Drive	1 x 2.5" SATA HDD drive bay	1 x 2.5" SATA HDD drive bay	1 x 3.5" SATA HDD space
	CF Card/CFast	N/A	N/A	Refer to SBC
	SD Card	Refer to SBC	Refer to SBC	Refer to SBC
I/O Interfaces	PS2 (KB/MS)	N/A	N/A	Refer to SBC
	USB 3.2 Gen 1	Refer to SBC	Refer to SBC	Refer to SBC
	USB 2.0	Refer to SBC	Refer to SBC	Refer to SBC
	Ethernet	2	2	2
	COM Port	Refer to SBC	Refer to SBC	Refer to SBC
	LPT	Refer to SBC	Refer to SBC	Refer to SBC
	Display	Refer to SBC	Refer to SBC	Refer to SBC
	Resolution	Refer to SBC	Refer to SBC	Refer to SBC
	Audio	Refer to SBC	Refer to SBC	Refer to SBC
	Wireless	Refer to SBC	Refer to SBC	Refer to SBC
Expansions	PCI	N/A	N/A	N/A
	PCIe	N/A	N/A	1 x Full-height expansion slot
	PCIe Mini	Refer to SBC	Refer to SBC	Refer to SBC
	Others	1 x E-Window	N/A	N/A
Power	Power Input	12V DC	12V DC	90~264V AC
	Power Supply	12V DC	12V DC	ACE-A618C 180W ACE-A627A 270W
Reliability	Mounting	VESA 100, wall mount	VESA 100, wall mount	Desktop, wall mount
	Operating Temperature	-10°C~50°C	-10°C~50°C	0°C ~ 50°C
	Operating Shock	Half-sine wave 3G, 11ms 3 shocks per axis		
	Operating Vibration	MIL-STD-810F 514.5C-1		
	Weight (Net/ Gross)	1 kg/2 kg	1 kg/2 kg	2.5 kg/3.9 kg

* Optional items

** Systems with hard drive meet MIL-STD-810F 514.5C-1 specifications. SSD/CF systems meet MIL-STD-810F 514.5C-1 specifications.

Embedded Chassis Series







Model Name		EBC-3000	EBC-2200	EBC-2100
Platform		Case only	Case only	Case only
Chassis	Color	Black	Black	Cool gray
	Dimensions (WxDxH) (mm)	280 x 230 x 88	215 x 150 x 55	262 x 134 x 56
	System Fan	1 x 6 cm	1 x 4 cm	1 x 4 cm*
	Chassis Construction	Heavy duty metal with plastic front panel	Aluminum alloy with heavy duty metal	
Motherboard	Motherboard Model	KINO-AQ170 KINO-ABT KINO-AA750-i2 KINO-AQ870 KINO-AQ670 KINO-AH611 KINO-AH612	NANO-BT-i1 NANO-BTW2 NANO-QM871	NANO-LX
	SBC Size (mm)	Mini-ITX (170 x 170)	EPIC (165 x 115)	EPIC (165 x 115)
Storage	Hard Drive	1 x 3.5" SATA HDD space	1 x 2.5" SATA 6Gb/s HDD/SSD drive bay	1 x 2.5" SATA HDD space
	CF Card/CFast	Refer to SBC	N/A	1
	SD Card	Refer to SBC	N/A	N/A
I/O Interfaces	PS2 (KB/MS)	Refer to SBC	Refer to SBC	1
	USB 3.2 Gen 1	Refer to SBC	Refer to SBC	N/A
	USB 2.0	Refer to SBC	Refer to SBC	4
	Ethernet	2	2	1
	COM Port	Refer to SBC	Refer to SBC	1+2 RS-232*
	LPT	Refer to SBC	N/A	*1
	Display	Refer to SBC	Refer to SBC	1 x VGA
	Resolution	Refer to SBC	Refer to SBC	N/A
	Audio	Refer to SBC	1 x Line out, 1 x Mic-in	3 x Audio jack*
	Wireless	Refer to SBC	1 x 802.11b/g/n	N/A
Expansions	PCI	N/A	N/A	N/A
	PCIe	N/A	N/A	N/A
	PCIe Mini	Refer to SBC	1 x Full-size PCIe Mini card slot	N/A
	Others	N/A	N/A	1 x PCI-104
Power	Power Input	90~264V AC	12V DC	12V DC in
	Power Supply	ACE-A618C 180W ACE-A627A 270W	12V, 5A	12 V DC in, AT mode only, with 60W power adapter
Reliability	Mounting	Desktop, wall mount	Wall mount, VESA 100	Desktop, wall mount
	Operating Temperature	0°C ~ 50°C	-20°C ~ 60°C	0°C ~ 50°C
	Operating Shock	Half-sine wave 3G, 11ms 3 shocks per axis	Half-sine wave shock 5G, 11ms, 3 shocks per axis	Half-sine wave 3G, 11ms 3 shocks per axis
	Operating Vibration		MIL-STD-810F 514.5C-1	
	Weight (Net/ Gross)	2.5 kg/3.9 kg	1.1kg/2kg	1 kg/3 kg

* Optional items

** Systems with hard drive meet MIL-STD-810F 514.5C-1 specifications. SSD/CF systems meet MIL-STD-810F 514.5C-1 specifications.

EBC-3300

Embedded Chassis for IEI thin Mini-ITX SBC



Features

- Designs for thin type Mini-ITX SBC with single voltage input
- Total height 42mm for space critical application
- One 2.5” hard drive capacity
- Flexible E-Window tool kit support

Friendly to Use

Easy for installation

- Flexible I/O function for expansion requirement
- Easy assembly and integration changing with IEI E-winodw tool kit



Specifications

Model Name		EBC-3300	
		EBC-3300-AL-R10	EBC-3300-BW-R10
Platform		Case only	Case only
Chassis	Color	Black	Black
	Dimension(WxDxH)	190 x 190 x 43	190 x 190 x 43
	System Fan	--	--
	Chassis Construction	Heavy duty metal	Heavy duty metal
Motherboard	Motherboard	tKINO-AL	tKINO-BW
	SBC Size (mm)	Mini-ITX (170 x 170)	Mini-ITX (170 x 170)
	CPU	Refer to SBC	Refer to SBC
	System Memory	2 x DDR3L 1333/1066 SO-DIMM (system Max : 8GB)	1 x DDR3L 1333/1066 SO-DIMM (system Max : 8GB)
Storage	Hard Drive	1 x 2.5" SATA 6Gb/s HDD/SSD Bay	
	SD Card	1	1
	mSATA / M.2	1 (M.2 B-key)	1
I/O interfaces	PS2 (KB/MS)	pin header	pin header
	USB 3.2 Gen 1	4	4
	USB 2.0	pin header	pin header
	Ethernet	2	2
	RS-232/422/485	2 (pin header)	2 (pin header)
	RS-232	4 (pin header)	4 (pin header)
	DIO	8-bit (pin header)	8-bit (pin header)
	Display	2 x DP++	1 x VGA 1 x DP/HDMI
	Resolution	2 x DP++ (up to 4096x2160@60Hz)	1 x VGA (up to 1920x1200@60Hz) 1 x HDMI/DP (up to 3840x2160@30Hz)
	Audio	Realtek ALC269 1 x Audio jacks (line-out, mic-in)	Realtek ALC662 1 x Audio jacks (line-out)
	Wireless	Refer to SBC	Refer to SBC
Expansions	PCIe Mini	1 x Full-size PCIe Mini	1 x Full-size PCIe Mini
	Others	1 x M.2 B key 2242 (SATA/USB2)	N/A
Power	Power Input	12V	9~30V
	Power Consumption	12V@2.58A	12V@1.61A
	Others	1 x Power swtich	1 x Power swtich
Reliability	Mounting	VESA 100, wall mount	
	Operating Temperature	-10 ~ 50 °C with air flow (SSD), 10% ~ 95%, non-condensing	
	Storage Temperature	-20°C ~ 60°C	
	Operating Shock	Half-sine wave shock 3G, 11ms, 3 shocks per axis	
	Operation Vibration	MIL-STD-810G 514.5C-1 (with SSD)	
	Weight (Net/Gross)	1 kg/ 2kg	

Fully Integrated I/O

●EBC-3300-BW-R10 Rear I/O

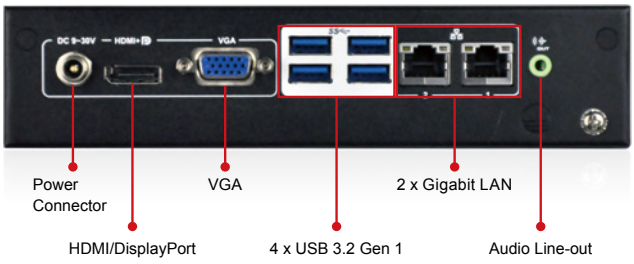

●EBC-3300-AL-R10 Rear I/O

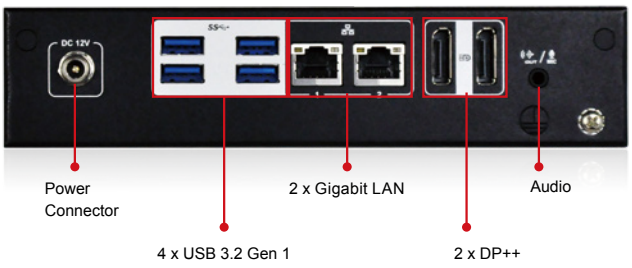

EBC-3300-AL-R10 Dimensions *(Unit: mm)*

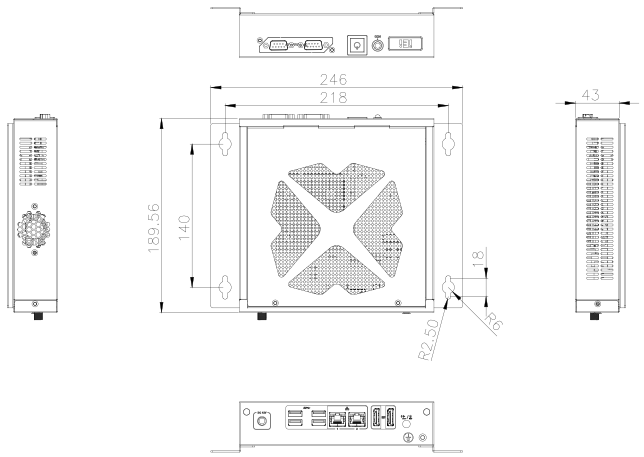

EBC-3300-BW-R10 Dimensions *(Unit: mm)*

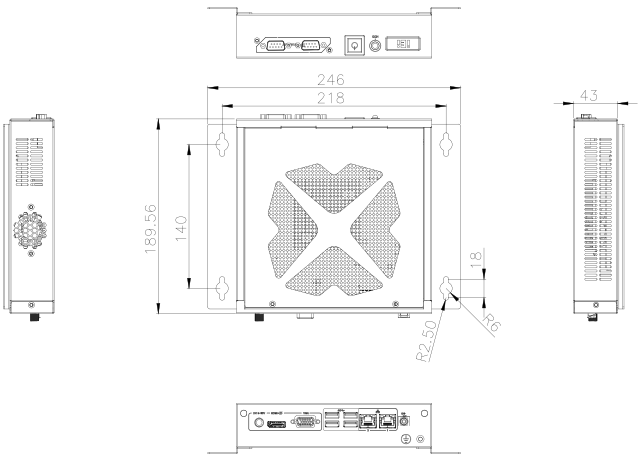

Ordering Information

Part No.	Description
EBC-3300-AL-R10	Embedded chassis for tKINO-AL with one 2.5" SATA hard drive bay, IO bracket, one LED cable, one power switch cable and RoHS
EBC-3300-BW-R10	Embedded chassis for tKINO-BW with one 2.5" SATA hard drive bay, IO bracket, one LED cable, one power switch cable and RoHS

Options

Part No.	Description
E-MPCIE-3G-R10	PCIe mini card supports 3G WWAN Module, with PMS 130C I/O bracket, RF antenna 300mm cable and GSM antenna cable, R10
E-MPCIE-CAN-R10	PCI Express Mini Dual CAN Bus module, Full size, RoHs
E-MPCIE-LAN-R10	PCIe mini card supports 1-port GbE with REALTEK RTL8111E controller, with PMS 194C I/O bracket and 250mm cable, R10
E-MPCIE-DLAN-R10	PCIe mini card supports PCIe mini card supports 2-port GbE with Intel I211 controller, with PMS 194C I/O bracket and 250mm cable, R10
E-MPCIE-UART-KIT01-R20	PCI Express Mini supports Quad RS-232/422/485 Port module, Full size, for E-Window, RoHs
E-MPCIE-UART-KIT02-R20	PCI Express Mini supports Dual RS-232/422/485, 16 bit GPIO module, Full size, for E-Window, RoHs
19FR123510BH-000001-RS	Fan Module, FAN, +12V, 3PIN, 31100-000409-RS, STANDARD, R123510BHAC6M5AR, CABLE L:300mm, MOLEX 5051-03P P=2.54 (For EBC-3300-ULT3-R10)
19FR123510BH-000002-RS	Fan Module, FAN, +12V, 4PIN, 31100-000410-RS, STANDARD, R123510BHAF6M6AR, CABLE L:300mm, MOLEX 5051-04P P=2.54 (For EBC-3300-AL-R10 & EBC-3300-BW-R10)
63040-010060-120-RS	FSP060-DIBAN2, 12V 60W AC/DC Adapter

Packing List

1 x QIG	1 x Wall mount bracket kit	1 x Screw set

EBC-3220

Compact Embedded Chassis for IEI Single Voltage Mini-ITX SBC



Features

- Designed for Mini-ITX SBC with single voltage input
- Space critical application
- One 2.5” hard drive capacity
- Cost-effective, RoHS compliant design

Specifications

Model Name		EBC-3220
Platform		Case only
Chassis	Color	Black
	Dimensions (WxDxH) (mm)	190 x 180 x 55
	System Fan (WxDxH) (mm)	40 x 40 x 10 (optional)
Motherboard	Motherboard Model	Refer to KINO Series
	SBC Size (mm)	Mini-ITX (170 x 170)
Storage	Hard Drive	1 x 2.5" HDD bracket
Button		Power switch
Reliability	Mounting	Desktop, wall mount, VESA mount
	Operating Temperature	-10°C ~ 50°C with air flow*
	Weight (Net/Gross)	1 kg/2 kg

*Ambient air speed follows IEC-68-2-2 standard

Dimensions *(Unit: mm)*

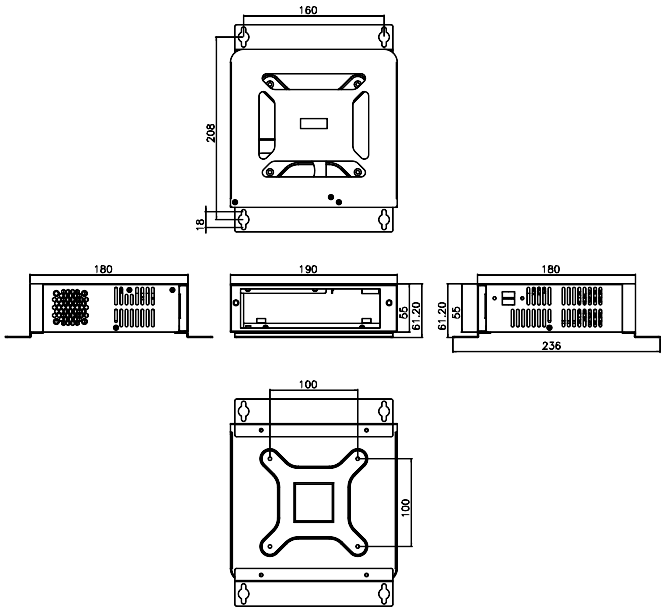

Compatible Mini-ITX SBC

Part No.	Recommended CPU Cooler
tKINO-ULT6	TBD
gKINO-V1000/R1000	19100-000232-00-RS, 19100-000225-00-RS
KINO-DAL	Fanless
tKINO-AL	Fanless
tKINO-ULT3	19100-000224-00-RS, 34000-000645-RS
KINO-DH110	CF-115XA-R10, CF-115XC-R10, CF-115XD-R10
KINO-DH310	CF-115XA-R10, CF-115XC-R10, CF-115XD-R10
KINO-HM551	CF-989A-RS
KINO-QM57A	CF-989A-RS, CF-989B-RS
KINO-QM670	CF-989A-RS
KINO-QM770	CF-989A-RS
KINO-DH610	CF-115XA-R10, CF-115XC-R10, CF-115XD-R10
KINO-DQM871-i1	19100-000203-00-RS
KINO-KBN/SE-i2	GX-424CC & GX415GA with fan
KINO-DA750-i2	CF-989B-RS
eKINO-BT	Fanless
KINO-DBT	Fanless
KINO-DH810	CF-115XA-R10, CF-115XC-R10, CF-115XD-R10
KINO-DQM170	19100-000203-00-RS (suitable for 25W CPU)
tKINO-BW	Fanless

Ordering Information

Part No.	Description
EBC-3220-R11	Mini-ITX embedded chassis, for DC input model only, with one 2.5" HDD bracket, w/o power adapter, black, RoHS

Packing List

1 x QIG	1 x Wall mount bracket kit	1 x Screw set

Options

Part No.	Description
32001-010800-100-RS	Dual port USB cable, 200mm, w/o bracket
63040-010060-110-RS	Power adapter, FSP060-DIBAN2, 90 V~264 V AC, 60W, 1500mm, 12 V DC, Din 4-pin/lock, CCL, ErP, PSE, RoHS
63040-010084-010-RS	Power adapter, FSP084-DIBAN2, 90 V~264 V AC, 84W, 1800mm, 12 V DC, Din 4-pin/lock, CCL, ErP, RoHS
19FR124010BL-000003-RS	Fan module, L=200mm, 4cm, 3-pin, CCL, RoHS

EBC-3100

Mini-ITX Chassis for High Power Consumption Applications





Features

- Designed for high performance applications, bundled with 270W high efficiency ATX power supply
- Front accessible I/O design
- Supports one expansion slot
- One 3.5” hard drive, one slim type optical drive capacity

Specifications

Model Name		EBC-3100
Platform		Case only
Chassis	Color	Black
	Dimensions (WxDxH) (mm)	260 x 250 x 156
	System Fan (WxDxH) (mm)	80 x 80 x 25
	Chassis Construction	Heavy duty metal with plastic front panel
Motherboard	Motherboard Model	Refer to KINO Series
	SBC Size (mm)	Mini-ITX (170 x 170)
Storage	Hard Drive	1 x 3.5" SATA HDD space
	ODD	1 x 5.25" slim type
Expansions		1 x Full-height expansion slot Max. dimensions: 220 mm (L) x 27 mm (D)
Power	Power Input	90 V~264 V AC
	Power Model	ACE-A618C 180W, ACE-A627A 270W
Reliability	Mounting	Desktop, wall mount
	Operating Temperature	0°C ~ 50°C
	Weight (Net/Gross)	2.5 kg/3.9 kg

Dimensions *(Unit: mm)*

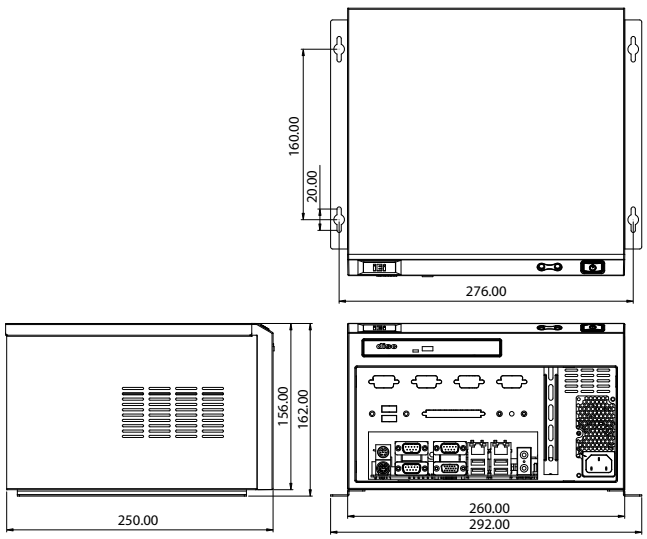

Compatible SBC

Part No.	Expansion Type	Recommended CPU Cooler
KINO-AQ170	1 x PCIe x16	CF-115XA-R10, CF-115XC-R10, CF-115XD-R10
KINO-ABT	1 x PCIe x4	Fanless
KINO-AA750-i2	1 x PCIe x8	CF-989B-RS
KINO-AQ870	1 x PCIex4	CF-1150SC-RS
KINO-AQ670	1 x PCIe x16	CF-115XA-R10, CF-115XC-R10, CF-115XD-R10
KINO-AH611	1 x PCIe x16	CF-115XA-R10, CF-115XC-R10, CF-115XD-R10
KINO-AH612	1 x PCIe x4	CF-115XA-R10, CF-115XC-R10, CF-115XD-R10

1U AC Input									
Products	Model No.	Watt AT/ ATX PFC	Input Voltage	Output Current Range					Efficiency
				+3.3 V	+5 V	+12 V	-12 V	+5 Vsb	
	ACE-A630C	300W ATX	90~265 VAC	16A (0.5A min.)	18A (0.5A min.)	15A (0.5A min)	0.5A	3A	82%
	ACE-A618C	180W ATX	90~264 VAC	10A (0.1A min)	14A (0.2A min.)	10A (0.6A min.)	0.3A	2.5A	85%

Ordering Information

Part No.	Description
EBC-3100-R12/ACE-A618C	Mini-ITX embedded chassis, one 3.5” hard drive bay, with ACE-A618C-RS 180W ATX power supply, black
EBC-3100-R12/ACE-A630C	Mini-ITX embedded chassis, one 3.5” hard drive bay, with ACE-A630C-RS 300W ATX power supply, black

Packing List

1 x System Fan	1 x Screw set	1 x QIG
1 x Power cord	1 x Wall mount kit	1 x SATA slim ODD cable

EBC-3000 *Mini-ITX Chassis for High Power Consumption Applications*





Features

- Designed for high performance applications, bundled with 270W high efficiency ATX power supply
- Front accessible I/O design
- One 3.5” hard drive capacity

Specifications

Model Name		EBC-3000
Platform		Case only
Chassis	Color	Black
	Dimensions (WxDxH) (mm)	280 x 230 x 88
	System Fan (WxDxH) (mm)	60 x 60 x 25
	Chassis Construction	Heavy duty metal with plastic front panel
Motherboard	Motherboard Model	Refer to KINO Series
	SBC Size (mm)	Mini-ITX (170 x 170)
Storage	Hard Drive	1 x 3.5" SATA HDD space
Power	Power Input	90 V~264 V AC
	Power Model	ACE-A618C 180W, ACE-A627A 270W
Reliability	Mounting	Desktop, wall mount
	Operating Temperature	0°C ~ 50°C
	Weight (Net/Gross)	2.5 kg/3.9 kg

Dimensions *(Unit: mm)*

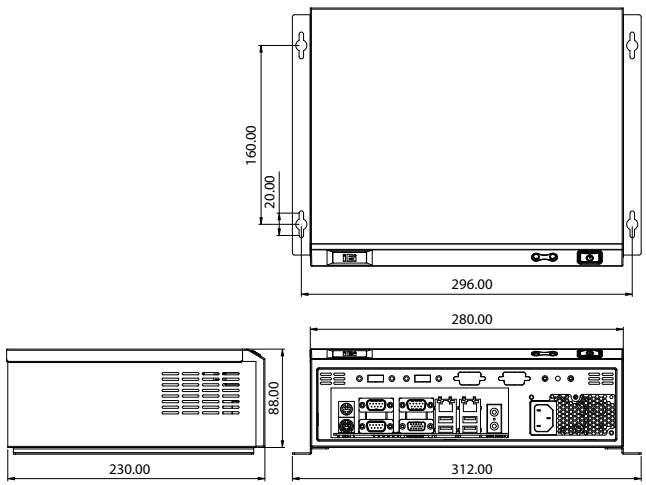

Compatible SBC

Part No.	Recommended CPU Cooler
KINO-AQ170	CF-115XA-R10, CF-115XC-R10, CF-115XD-R10
KINO-ABT	Fanless
KINO-AA750-i2	CF-989B-RS
KINO-AQ870	CF-1150SC-RS
KINO-AQ670	CF-115XA-R10, CF-115XC-R10, CF-115XD-R10
KINO-AH611	CF-115XA-R10, CF-115XC-R10, CF-115XD-R10
KINO-AH612	CF-115XA-R10, CF-115XC-R10, CF-115XD-R10

1U AC Input								
Products	Model No.	Watt AT/ATX PFC	Input Voltage	Output Current Range				Efficiency
				+3.3 V	+5 V	+12 V	-12 V	+5 Vsb	
	ACE-A630C	300W ATX	90~265 VAC	16A (0.5A min.)	15A (0.5A min)	0.5A	0.8A	3A	82%
	ACE-A618C	180W ATX	90~264 VAC	10A (0.1A min)	14A (0.2A min.)	10A (0.6A min.)	0.3A	2.5A	85%

Ordering Information

Part No.	Description
EBC-3000-R12/ACE-A618C	Mini-ITX embedded chassis, one 3.5” hard drive bay, with ACE-A618C-RS 180W ATX power supply, black
EBC-3000-R12/ACE-A630C	Mini-ITX embedded chassis, one 3.5” hard drive bay, with ACE-A630C-RS 300W ATX power supply, black

Packing List

1 x System fan	1 x Screw set	1 x QIG
1 x Power cord	1 x Wall mount kit	

EBC-2200

Embedded Chassis for EPIC SBC



Features

- Designed for EPIC SBC with single voltage input
- One 2.5" hard drive capacity
- Support one PCIe Mini expansion slot
- Complete I/O interface, including dual GbE, dual display port



Specifications

Model Name		EBC-2200-BT
Platform		Case only
Chassis	Color	Black
	Dimensions (WxDxH) (mm)	215 x 150 x 55
	System Fan (WxDxH) (mm)	40 x 40 x 10 (optional)
	Chassis Construction	Aluminum alloy with heavy duty metal
Motherboard	Motherboard Model	NANO-BT-i1 NANO-BTW2
	SBC Size	EPIC SBC (165 mm x 115 mm)
	Processor	Refer to SBC
	Chipset	SoC
	System Memory	1 x 204-pin 1066/1333 MHz DDR3L SO-DIMM (system max. 8GB)
Storage	Hard Drive	1 x 2.5" SATA 6Gb/s HDD/SSD drive bay
System Function	PS2 (KB/MS)	1
	USB 3.2 Gen 1	1
	USB 2.0	3
	Ethernet	LAN1: Intel® I210-AT PCIe controller with NCSI support LAN2: Intel® I211-AT PCIe controller
	COM Port	2 x RS-232 1 x RS-232/422/485
	Digital I/O	N/A
	Display	1 x HDMI, 1 x VGA
	Audio	1 x Line out, 1 x Mic-in
	Wireless	1 x 802.11b/g/n (optional)
Expansion	PCIe Mini	1 x Full-size PCIe Mini card slot
Power	Power Input	12 V DC
	Power Consumption	12V@1.52A (Intel® Atom™ J1900 CPU with 8GB 1333MHz DDR3 memory)
Reliability	Mounting	Wall mount, VESA 75
	Operating Temperature	-20°C ~60°C
	Operating Shock	Half-sine wave shock 5G, 11ms, 3 shocks per axis
	Operating Vibration	MIL-STD-810F 514.5C-1 (with SSD)
	Weight (Net/Gross)	1.1 kg/2 kg

Dimensions *(Unit: mm)*

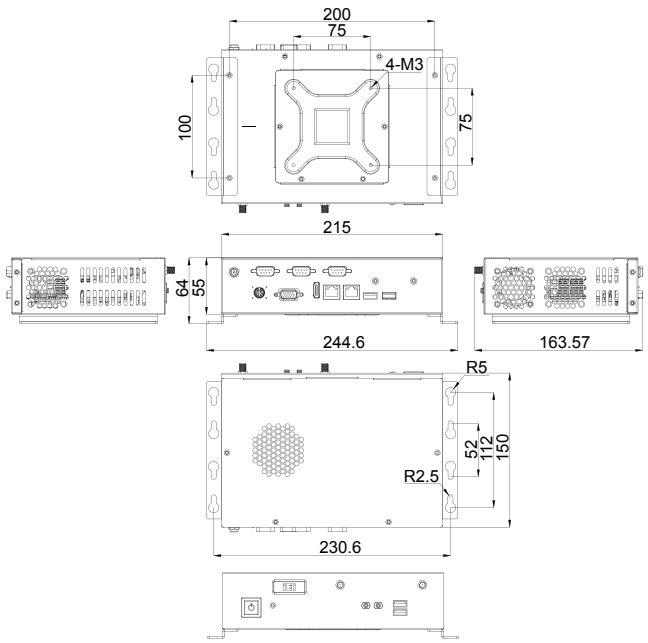

Ordering Information

Part No.	Description
EBC-2200-BT-R10	Embedded chassis for NANO-BT Series SBC with one 2.5" SATA hard drive bay, IO bracket, one LED cable, one power switch cable, one USB cable, RoHS, R10

Options

Part No.	Description
32231-000100-200-RS	DIO cable, 150 mm, 2x5 pin
32205-001400-200-RS	RS-232 cable, 200 mm, 2x5 pin
32107-004000-100-RS	Audio cable, 250 mm, two 3.5 mm phone jacks with nut
63040-010060-120-RS	Power adapter, FSP060-DIBAN2, 90 V~264 V AC, 60 W, 12 V DC, ErP
31100-000272-RS	Fan, +12 V DC, 4-pin, YEN SUN, 40 mm x 40 mm x 15 mm, 6000 RPM

Packing List

1 x QIG	2 x Wall mount bracket	1 x Screw set

EBC-2100

Embedded Chassis for EPIC NANO Series



Features

- Fanless system with AMD LX-800
- Complete I/O interfaces, including LAN, COM, four USB
- Single 12V DC power input, AT mode only
- DDR support up to 1GB

Specifications

Model Name		EBC-2100
Platform		Case only
Chassis	Color	Cool gray
	Dimensions (WxDxH) (mm)	262 x 134 x 56
	System FAN (WxDxH) (mm)	40 x 40 x 10 (optional)
	Chassis Construction	Aluminum alloy with heavy duty metal
Motherboard	Motherboard Model	NANO-LX
	SBC Size (mm)	EPIC (165 x 115)
	Processor	Refer to SBC
	Chipset	Refer to SBC
	System Memory	Refer to SBC
Storage	Hard Drive	1 x 2.5" SATA HDD drive bay
	CF Card/CFast	1
I/O Interfaces	PS2 (KB/MS)	1
	USB 2.0	4
	Ethernet	1 x Realtek 8100C
	COM Port	1+2 RS-232*
	LPT	1*
	Display	1 x VGA
	Audio	3 x Audio jack*
	Wireless	N/A
Expansions	PCIe Mini	N/A
	Others	1 x PCI-104
Power	Power Input	12 V DC in, AT mode only
	Power Consumption	12V@0.92A (AMD LX800 CPU with 400MHz 256MB DDR RAM)
Reliability	Mounting	Desktop, wall mount
	Operating Temperature	0°C ~ 50°C
	Operating Shock	Half-sine wave 3G, 11ms 3 shocks per axis
	Operating Vibration	MIL-STD-810F 514.5C-1
	Weight (Net/Gross)	1 kg/3 kg

*Optional items

**The system with hard drive can meet the standard testing MIL-STD-810F 514.5C-1; the system with SSD/CF can pass MIL-STD-810F 514.5C-2.

Dimensions *(Unit: mm)*

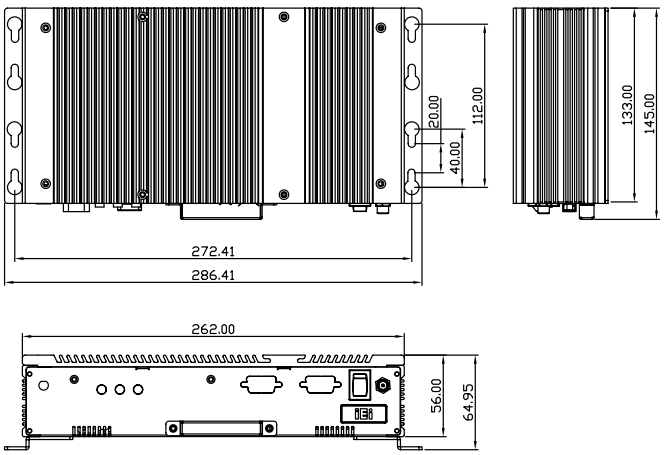

Ordering Information

Part No.	Description
EBC-2100-R41	Embedded chassis for NANO-8522/LX, compatible with 2.5" SATA hard drive, 60W power adapter with ERP and PSE certificates, sliver, RoHS

Options

Part No.	Description
32221-001000-101-RS	44-pin IDE cable for 2.5" hard drive
32801-000205-100-RS	2.5" SATA HDD cable with 2-pin WAFER 2.0mm power cable, for NANO-945GSE-N270 in EBC-2101, 20cm
CF-PV4010-R10	4010 system fan, +12V ball bearing

Packing List

- 1 x 12V 60W power adapter
- 1 x Power cord
- 1 x Screw set
- 1 x Wall mount kit
- 1 x QIG



Wall mount bracket

Chassis Selection Guide

	Model No.	Type	Board Type		Max. Slots	Drive Capacity				Fan Spec.			
			SBC Slot	Motherboard		5.25" F.P.	3.5" F.P	2.5" Int	3.5" Int	4 cm	6 cm	8 cm	12 cm
	RACK-1150G	1U	PICMG 1.0 full-size/ PICMG 1.3 full-size		3	1			1	3			
	RACK-220G	2U	PICMG 1.0 full-size	*microATX, Mini-ITX	6	1	1		1			2	
	RACK-305G	4U	Full-size	*ATX, microATX, Mini-ITX	14	2	1		1		***2	2	
	RACK-360G	4U	Full-size	*ATX, microATX, Mini-ITX	14	2	1		1		***2		1
	RACK-3000G	4U	Full-size	*ATX, microATX, Mini-ITX	14	3	2		1		***2	2	
	NEW! RACK-500AI	5U	Full-size		5		1		1			1	
	ECA-300			ATX, microATX	7	2		1	1				
	ECA-200			microATX	4			1	1				
	ECA-100			ATX, microATX	7			1	1				
	PAC-1000G		Full-size		6	1	1		1			1	
	PAC-106G		Full-size		6		1		1			1	
	PAC-1700G		Full-size		7	1	1		2			1	
	PAC-125G		Full-size		10	2	1		1			1	
	PAC-53GH		Half-size		3			1					
	PAC-42GH		Half-size		4		△1		△1			1	
	PR-1500G		Half-size		5	◇1	1		1			1	
	PAC-400G		Half-size		5				△1			1	
	NEW! PAC-400AI		Half-size		5				△1			1	
	PAC-700G		Half-size		7	1	△1		1			1	

	Model No.	Indicators		Front Panel Control						Back Panel Control		PSU	Dimensions (mm)			Color	
		Power	HDD	Power	Reset	KB	USB	Keylock	COM	USB	COM		Depth	Height	Width	Black	White
	RACK-1150G	O	O	O	O		2					1U	449	44	431	O	
	RACK-220G	O	O	O	O		2	O				PS/2	487.5	88	431	O	O
	RACK-305G	O	O	O	O	O	2	O				PS/2 or mini redundant	413	176	431	O	O
	RACK-360G	O	O	O	O	O	2	O				PS/2 or mini redundant	435.5	176	431	O	O
	RACK-3000G	O	O	O	O			O				PS/2 or mini redundant	520	176	431	O	O
	NEW! RACK-500AI	O	O	O	O		2					1U	440.2	221.3	110.6	(Navy Blue & Black)	
	ECA-300	O	O	O	O		2		6			1U	291	162	365	O	
	ECA-200	O	O	O	O		2		6			1U	310	162	310	O	
	ECA-100	O	O	O	O		2			4	2	1U	320	480.5	210		O
	PAC-1000G	O	O	O	O							PS/2	421	176	232	O	
	PAC-106G	O	O	O	O		2					1U	400	175.5	166		O
	PAC-1700G	O	O	O	O							PS/2	433	253.7	192.4	O	
	PAC-125G	O	O	O	O		2	O				PS/2	420	176	321		O
	PAC-53GH	O	O	O	O		2					1U	218	200	95		O
	PAC-42GH	O	O	O	O		2					1U	269	230	140		O
	PR-1500G	O	O	O	O		2					1U	254	132	286		O
	PAC-400G	O	O	O	O		2					1U	269	230.5	140		O
	NEW! PAC-400AI	O	O	O	O		2					1U	269	230.5	140	(Navy Blue & Black)	
	PAC-700G	O	O	O	O		2	O				1U	279	176	321	O	

Rackmount chassis
Full-size wall mount chassis
Half-size wall mount chassis

* For ATX model
*** Optional fans for ATX model

◇ Slim-type CD-ROM
△ Please refer to datasheet for detail information

RACK-1150G/1150G-PE *1U Full-size Rackmount Chassis*

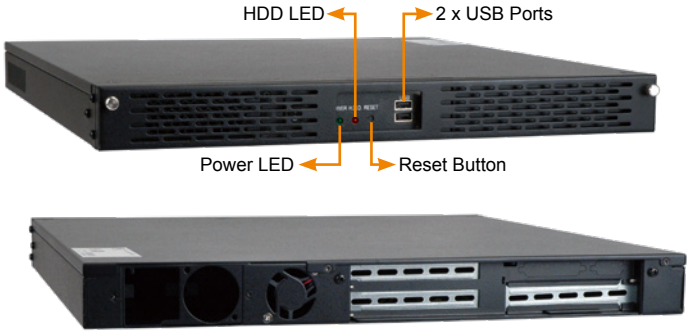

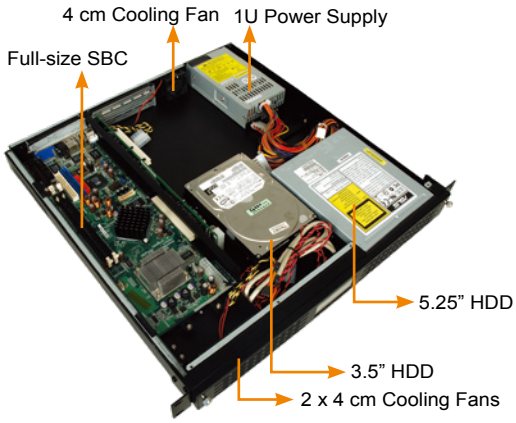

CD-ROM, and HDD are not included in package

Features

- RoHS compliant design
- Two front-accessible USB ports
- One 5.25" drive bay
- One 3.5" internal hard drive bay
- Three 4 cm cooling fans

Specifications

◆ **Construction**	Heavy duty metal
◆ **SBC Form Factor**	Full-size CPU card
◆ **Drive Bays**	1 x 5.25” 1 x 3.5" HDD (internal)
◆ **Cooling Fans**	3 x 4 cm
◆ **I/O Ports**	2 x USB
◆ **I/O Openings**	1 x COM, 1 x LPT
◆ **Expansion Slots**	3 slots/2 slots (PE)
◆ **Indicators**	Power, HDD
◆ **Button**	Power switch, reset button
◆ **Operating Temperature**	0°C ~ 50°C
◆ **Operating Humidity**	10% ~ 90%
◆ **Color**	B: Black
◆ **Weight (Net/Gross)**	7.5 kg/9.5 kg
◆ **Dimensions (DxWxH)**	449 mm x 431 mm x 44 mm

RACK-1150G and RACK-1151G support processors with a maximum TDP of 31 W only.

Ordering Information

Part No.	Description
RACK-1150GB-PE-R11/A618C	1U 2-slot full size rackmount chassis for PICMG 1.3 backplane, Black, 3x 4cm fan, with ACE-A618C-RS-R10(180W), RoHS
RACK-1150GB-R11/A618C	1U 3-slot full size rackmount chassis for PICMG 1.0 backplane, Black, 3x 4cm fan, with ACE-A618C-RS-R10(180W), RoHS

Dimensions *(Unit: mm)*

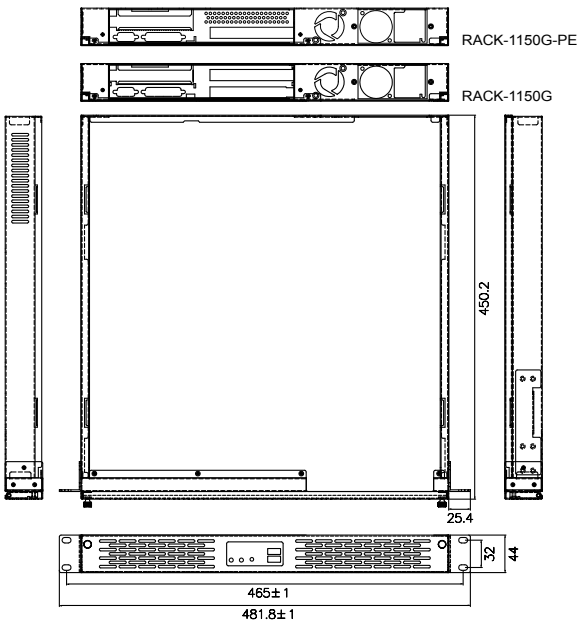

Backplane Options

Model No.	SBC Type	PCI	ISA	PCIe			PSU Connector
				x1	x4	x16	
PCI-2SD2-RS	PICMG 1.0	2	0	0	0	0	ATX
PE-2SD1*	PICMG 1.3	0	0	0	0	1	ATX
PE-2SD2*	PICMG 1.3	1	0	0	0	0	ATX

Adapter cable 32100-040600-RS is required when connecting PCI-2SD2-RS to a standard ATX supply.

* For RACK-1150G-PE

Power Supply Options

Type	Model No.	Watt
ATX	ACE-A618C-RS-R10	180W
	ACE-A225A-R11	250W
	ACE-4520C-RS	200W
	ACE-A630C-R10	300W

RACK-1150G supports single 1U height PSU. For more IEI PSU models, please refer to section 5 or visit www.ieiworld.com.

Cable Options

Part No.	Description
32102-033200-100-RS	WIRE CABLE; POWER CABLE; 2; 100MM; 18AWG; (A)MOLEX 5557-0400 P=4.2; (B)MOLEX 5559-0400 P=4.2; Wins Precision; RoHS
32100-040602-RS	WIRE CABLE;POWER CABLE;2;400MM;18AWG;(A)MOLEX 5559-20P P=4.2MM;(B)MOLEX 5557-16P P=4.2MM;RACK-2320;RoHS

RACK-220G

2U 6-slot Full-size Rackmount Chassis

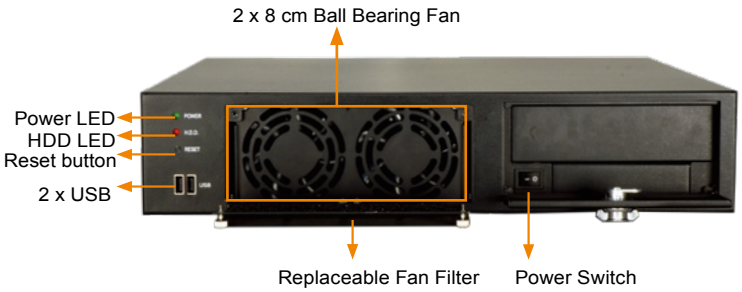

CD-ROM, and HDD are not included in package



RACK-220GBATX



RACK-220GB

B-Black

Features

- RoHS compliant design
- Two USB ports on the front panel
- Two 8 cm cooling fans with replaceable fan filter
- One 5.25" and one 3.5" drive bays
- One 3.5" internal hard drive bay
- Lockable door prevents unauthorized access

Specifications

◆ **Construction**	Heavy duty metal
◆ **SBC Form Factor**	Full-size, slot CPU card
◆ **Drive Bays**	1 x 5.25" 1 x 3.5" 1 x 3.5" HDD (internal)
◆ **Cooling Fans**	2 x 8 cm
◆ **I/O Ports**	2 x USB
◆ **Expansion Slots**	6 slots
◆ **Indicators**	Power, HDD
◆ **Button**	Power switch, reset button
◆ **Operating Temperature**	0°C ~ 50°C
◆ **Operating Humidity**	10% ~ 90%
◆ **Color**	Black
◆ **Weight (Net/Gross)**	8.2 kg/12.4 kg
◆ **Dimensions (DxWxH)**	488 mm x 431 mm x 89 mm

Ordering Information

Part No.	Description
RACK-220G🅱/A130C	2U 6-slot full-size rackmount chassis for PICMG 1.0 SBC, (black), 2 x 8 cm fan, with ACE-A130C-R10 (300W ATX model), RoHS
RACK-220G 🅱 ATX/A130C	2U microATX motherboard rackmount chassis, (black), 2 x 8 cm fan, with ACE-A130C-R10 (300W ATX model), RoHS

Dimensions *(Unit: mm)*

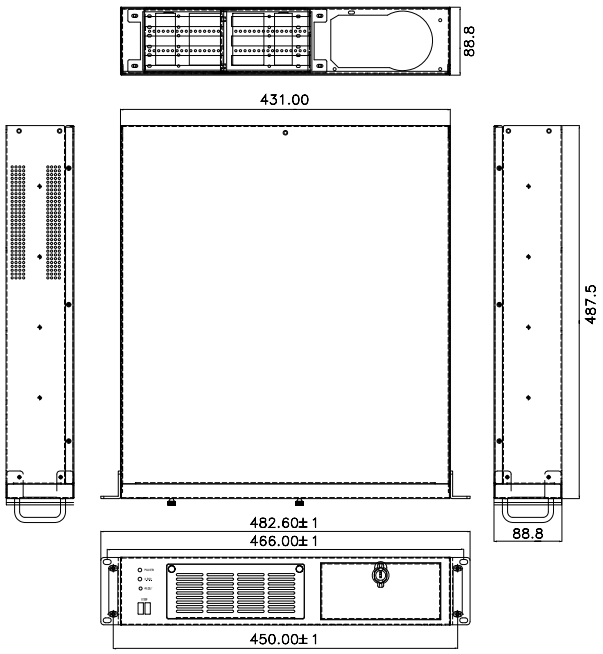

Selection Guide

Model No.	SBC Type	PSU Type	Color
RACK-220G 🅱	PICMG 1.0	PS/2	Black
RACK-220G 🅱 ATX	microATX MB	PS/2	Black

Backplane Options

Model No.	SBC Type	PCI	ISA	PCIe			PSU Connector
				x1	x4	x16	
PCI-5SDA-RS	PICMG 1.0	L2+R2	0	0	0	0	AT/ATX
PCI-5SD6-RS	PICMG 1.0	L2+R2	0	0	0	0	ATX
PCI-6SD-RS	PICMG 1.0	L1+R1	L1+R1	0	0	0	ATX

Power Supply Options

Type	Model No.	Watt
AT	ACE-925AP-U-RS	250W
	ACE-935AL-RS	300W
ATX	ACE-A130C-R10	300W
	ACE-A140A-S-R11	400W

RACK-220G supports single PS/2 PSU. For more IEI PSU models, please refer to section 5 or visit www.ieiworld.com.

RACK-305G

4U 14-slot Full-size Rackmount Chassis

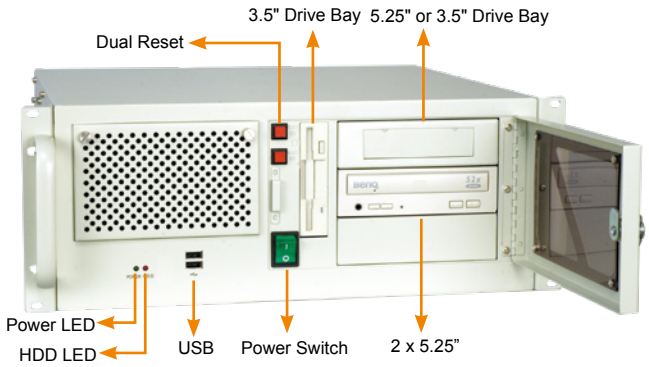

CD-ROM, and HDD are not included in package

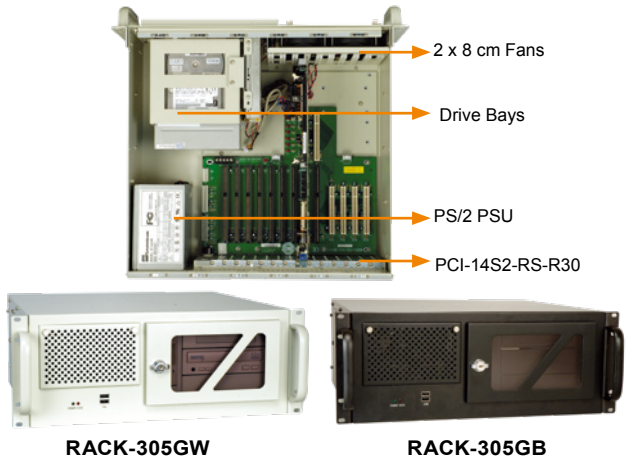

RACK-305GW **RACK-305GB**

Features

- RoHS compliant design
- Two USB ports on the front panel
- Dual reset buttons for dual systems
- Two 8 cm cooling fans with replaceable fan filters
- Lockable door prevents unauthorized access

Dimensions *(Unit: mm)*

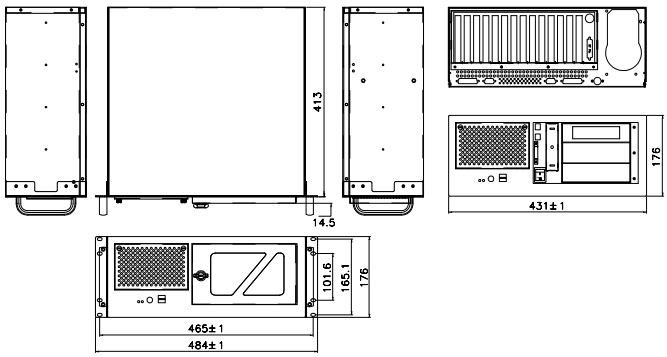

Specifications

◆ **Construction**	Heavy duty metal
◆ **SBC Form Factor**	Full-size, slot CPU card
◆ **Drive Combinations**	3 x 5.25" + 1 x 3.5" HDD or 2 x 5.25" + 2 x 3.5" HDD or 2 x 5.25" + 1 x 3.5" HDD + 1 x front accessible 3.5" or 2 x 5.25" + 2 x front accessible 3.5"
◆ **Cooling Fans**	2 x 8 cm
◆ **I/O Ports**	2 x USB
◆ **Expansion Slots**	14 slots for RACK-305G 7 slots for RACK-305GATX
◆ **Indicators**	Power, HDD
◆ **Button**	1 x Power switch, 2 x reset buttons
◆ **Operating Temperature**	0°C ~ 50°C
◆ **Operating Humidity**	10% ~ 90%
◆ **Color**	W: White/B: Black
◆ **Weight (Net/Gross)**	10.4 kg/15 kg
◆ **Dimensions (DxWxH)**	413 mm x 431 mm x 176 mm

Backplane Options

Model No.	SBC Type	PCI	ISA	PCIX	PCIe			PSU Connector
					x1	x4	x16	
PCI-13SD-RS	PICMG 1.0	3+4	3+3	0	0	0	0	AT/ATX
PCI-14S2-RS	PICMG 1.0	4	8	0	0	0	0	AT/ATX
PCI-14S3-RS	PICMG 1.0	4	9	0	0	0	0	AT/ATX
PX-14S3-RS	PICMG 1.0	12	2	0	0	0	0	AT/ATX
PX-14S5-RS	PICMG 1.0	7	6	0	0	0	0	AT/ATX
PE-6S	PICMG 1.3	2	0	0	2	0	1	ATX
PE-10S	PICMG 1.3	4	0	0	4	0	1	ATX
PE-10S2	PICMG 1.3	4	0	0	4	0	1	ATX
PXE-12S	PICMG 1.3	4	0	6	0	0	1	ATX
PE-13SD	PICMG 1.3	4	0	0	4	1	2	ATX
PXE-13S	PICMG 1.3	8	0	0	3	0	1	ATX
SPXE-14S	PICMG 1.3	0	0	0	12	0	0	ATX

Ordering Information

Part No.	Description
RACK-305G C -R22/ACE-935AL	4U 14-slot rackmount chassis, USB, (black/white), with ACE-935AL-RS PSU (300W), RoHS
RACK-305G C -R22/A130C	4U 14-slot rackmount chassis, (black/white), 2 x 8 cm fan, with ACE-A130C-R10 (300W ATX model), RoHS
RACK-305G C ATX-R22/A130C	4U ATX motherboard rackmount chassis, (black/white), 2 x 8 cm fan, with ACE-A130C-R10 (300W ATX model), RoHS

C Color Code: B-Black W-White

Power Supply Options

Type	Model No.	Watt
AT	ACE-935AL-RS	300W
	ACE-T140A-RS	400W
ATX	ACE-A130C-R10	300W
	ACE-A140A-S-R11	400W
	ACE-A160A-R11	600W
ATX Redundant	ACE-R4130AP-RS	300W
	ACE-R4140AP-RS	400W

RACK-305G supports single PS/2 PSU. For more IEI PSU models, please refer to section 5 or visit www.ieiworld.com.

RACK-360G

4U 14-slot Full-size Rackmount Chassis

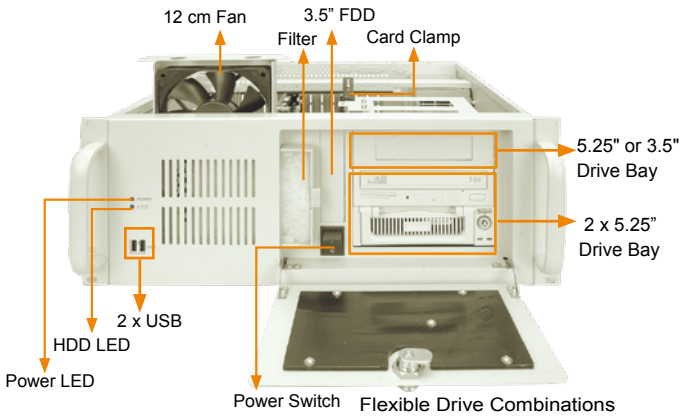

Flexible Drive Combinations



RACK-360GW



RACK-360GB



Replaceable fan filter



Front accessible I/O



Anti-vibration card clamp

Features

- Cost-effective, RoHS compatible design
- Flexible drive combinations
- Two USB ports on the front panel
- 12 cm cooling fan with replaceable fan filter
- Lockable door prevents unauthorized access

Specifications

◆ **Construction**	Heavy duty metal
◆ **SBC Form Factor**	Full-size, slot CPU card
◆ **Drive Combinations**	3 x 5.25" + 1 x 3.5" HDD or 2 x 5.25" + 2 x 3.5" HDD or 2 x 5.25" + 1 x 3.5" HDD + 1 x front accessible 3.5" or 2 x 5.25" + 2 x front accessible 3.5"
◆ **Cooling Fans**	1 x 12 cm
◆ **I/O Ports**	2 x USB
◆ **I/O Openings**	2 x COM, 2 x LPT
◆ **Expansion Slots**	14 slots for RACK-360G 7 slots for RACK-360GATX
◆ **Indicators**	Power, HDD
◆ **Button**	Power switch, reset button
◆ **Operating Temperature**	0°C ~ 50°C
◆ **Operating Humidity**	10% ~ 90%
◆ **Color**	B: Black/W: White
◆ **Weight (Net/Gross)**	11 kg/15.4 kg
◆ **Dimensions (DxWxH)**	435.5 mm x 431 mm x 176 mm

Ordering Information

Part No.	Description
RACK-360G C -R23/ACE-935AL	4U 14-slot rackmount chassis, USB, (black/white), with ACE-935AL-RS PSU (300W), RoHS
RACK-360G C -R23/A130C	4U 14-slot rackmount chassis, (black/white), 1 x 12 cm fan, with ACE-A130C-R10 (300W ATX model), RoHS
RACK-360G C ATX-R23/A130C	4U ATX motherboard rackmount chassis, (black/white), 1 x 12 cm fan, with ACE-A130C-R10 (300W ATX model), RoHS
RACK-360E C -R23/A130C	4U 14-slot Rackmount Chassis, (black/white), 1x 12cm fan, w/ACE-A130C-R10 (300W ATX power)
RACK-360E C -R23/ACE-935AL	4U 14-Slot Rackmount Chassis, USB, (black/white), W/ACE-935AL-RS PSU (300W AT power), RoHS
RACK-360E C ATX-R23/A130C	4U ATX motherboard Rackmount Chassis, (black/white), 1x 12cm fan, w/ACE-A130C-R10 (300W ATX power)

C Color Code: B-Black W-White
Model variations are listed below:
* RACK-360G: with paint coating inside * RACK-360E: without paint coating inside

Dimensions *(Unit: mm)*

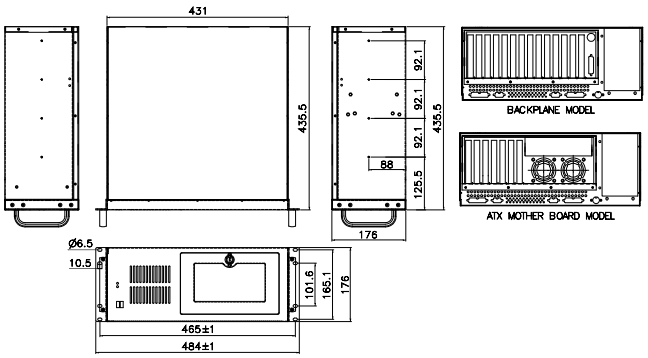

Backplane Options

Model No.	SBC Type	PCI	ISA	PCIX	PCIe			PSU Connector
					x1	x4	x16	
PCI-13SD-RS	PICMG 1.0	3+4	3+3	0	0	0	0	AT/ATX
PCI-14S2-RS	PICMG 1.0	4	8	0	0	0	0	AT/ATX
PCI-14S3-RS	PICMG 1.0	4	9	0	0	0	0	AT/ATX
PX-14S3-RS	PICMG 1.0	12	2	0	0	0	0	AT/ATX
PX-14S5-RS	PICMG 1.0	7	6	0	0	0	0	AT/ATX
PE-6S	PICMG 1.3	2	0	0	2	0	1	ATX
PE-10S	PICMG 1.3	4	0	0	4	0	1	ATX
PE-10S2	PICMG 1.3	4	0	0	4	0	1	ATX
PXE-12S	PICMG 1.3	4	0	6	0	0	1	ATX
PE-13SD	PICMG 1.3	4	0	0	4	1	2	ATX
PXE-13S	PICMG 1.3	8	0	0	3	0	1	ATX
SPXE-14S	PICMG 1.3	0	0	0	12	0	0	ATX

Power Supply Options

Type	Model No.	Watt
AT	ACE-935AL-RS	300W
ATX	ACE-A130C-R10	300W
	ACE-A140B-S-R10	400W
	ACE-A160B-R10	600W
	ACE-A210A-R10	1000W
ATX Redundant	ACE-R4130AP-RS	300W
	ACE-R4140AP-RS	400W

RACK-360G supports single PS/2 PSU. For more IEI PSU models, please refer to section 5 or visit www.ieiworld.com.

RACK-3000G

4U 14-slot Full-size Rackmount Chassis

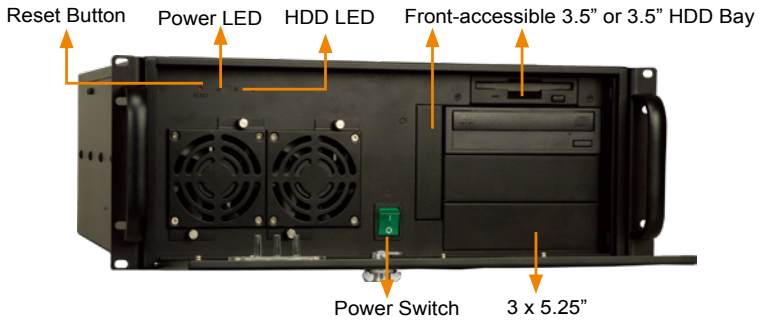



RACK-3000GBATX



RACK-3000GB

CD-ROM and HDD are not included in package

Features

- RoHS compliant design
- Compatible with ATX and microATX form factor motherboards
- Three 5.25" and three 3.5" drive bays
- Two 8 cm cooling fans
- Lockable door prevents unauthorized access

Specifications

◆ **Construction**	Heavy duty metal
◆ **SBC Form Factor**	Full-size, slot CPU card
◆ **Drive Bays**	3 x 5.25" + 1 x front-accessible 3.5" + 2 x 3.5" HDD or 3 x 5.25” + 2 x front-accessible 3.5” + 1 x 3.5” HDD or 3 x 5.25” + 3 x 3.5” HDD
◆ **Cooling Fans**	2 x 8 cm
◆ **I/O Openings**	2 x COM, 2 x LPT, 1 x PS2
◆ **Expansion Slots**	14 slots for RACK-3000G 7 slots for RACK-3000GATX
◆ **Indicators**	Power, HDD
◆ **Button**	Power switch, reset button
◆ **Operating Temperature**	0°C ~ 50°C
◆ **Operating Humidity**	10% ~ 90%
◆ **Color**	Black
◆ **Weight (Net/Gross)**	13 kg/18 kg
◆ **Dimensions (DxWxH)**	520 mm x 431 mm x 176 mm

Ordering Information

Part No.	Description
RACK-3000G🄱-R21/A130C	4U 14-slot rackmount chassis, (black), 2 x 8 cm fan, with ACE-A130C-R10 (300W ATX model), RoHS
RACK-3000G🄱ATX-R21/A130C	4U ATX motherboard rackmount chassis, (black), 2 x 8 cm fan, with ACE-A130C-R10 (300W ATX model), RoHS

Dimensions *(Unit: mm)*

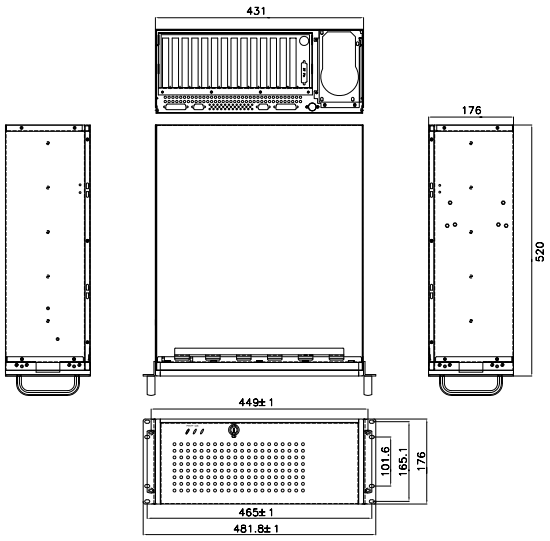

Backplane Options

Model No.	SBC Type	PCI	ISA	PCIX	PCIe			PSU Connector
					x1	x4	x16	
PCI-13SD-RS	PICMG 1.0	3+4	3+3	0	0	0	0	AT/ATX
PCI-14S2-RS	PICMG 1.0	4	8	0	0	0	0	AT/ATX
PCI-14S3-RS	PICMG 1.0	4	9	0	0	0	0	AT/ATX
PX-14S3-RS	PICMG 1.0	12	2	0	0	0	0	AT/ATX
PX-14S5-RS	PICMG 1.0	7	6	0	0	0	0	AT/ATX
PE-6S	PICMG 1.3	2	0	0	2	0	1	ATX
PE-10S	PICMG 1.3	4	0	0	4	0	1	ATX
PE-10S2	PICMG 1.3	4	0	0	4	0	1	ATX
PXE-12S	PICMG 1.3	4	0	6	0	0	1	ATX
PE-13SD	PICMG 1.3	4	0	0	4	1	2	ATX
PXE-13S	PICMG 1.3	8	0	0	3	0	1	ATX
SPXE-14S	PICMG 1.3	0	0	0	12	0	0	ATX

Power Supply Options

Type	Model No.	Watt
AT	ACE-935AL-RS	300W
	ACE-T140A-RS	400W
ATX	ACE-A130C-R10	300W
	ACE-A140A-S-R11	400W
	ACE-A160A-R11	600W
	ACE-A210A-R10	1000W
ATX Redundant	ACE-R4130AP-RS	300W
	ACE-R4140AP-RS	400W

RACK-3000G supports single PS/2 PSU. For more IEI PSU models, please refer to section 5 or visit www.ieiworld.com.

RACK-500AI

5U 5-slot Full-size Rackmount Chassis

New

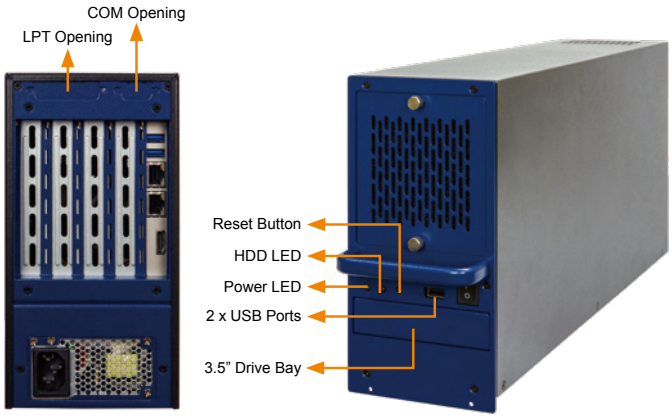

CA-950GB-R10



CA-950GB-R10

19" rack carrier can carry four RACK-500AI and fit into standard 19"-width rack with 5U height.

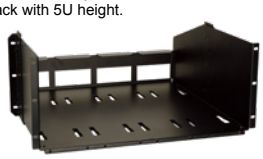

FDD and HDD are not included in the package

Features

- RoHS compliant design
- 2 x USB ports on front panel
- One front-accessible 3.5" and one internal 3.5" HDD drive bays
- Hot-swappable 8 cm cooling fan
- 19" rack-mountable carrier (optional)

Dimensions *(Unit: mm)*

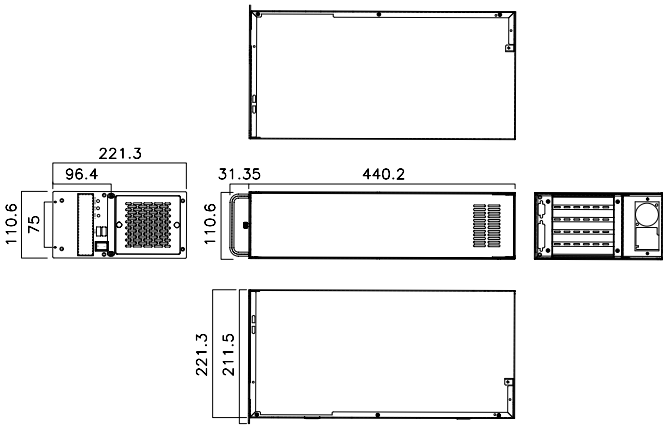

Specifications

◆ **Construction**	Heavy duty metal
◆ **SBC Form Factor**	Full-size CPU cards
◆ **Drive Bays**	1 x Front-accessible 3.5" 1 x 3.5" HDD
◆ **Cooling Fans**	1 x 8 cm
◆ **I/O Ports**	2 x USB
◆ **I/O Openings**	1 x LPT, 1 x COM
◆ **Expansion Slots**	5 slots
◆ **Indicators**	Power, HDD
◆ **Button**	Power switch, reset button
◆ **Operating Temperature**	0°C ~ 50°C
◆ **Operating Humidity**	10% ~ 90%
◆ **Color**	Navy blue and black
◆ **Weight (Net/Gross)**	6 kg/9 kg
◆ **Dimensions (DxWxH)**	440.2 mm x 110.6 mm x 221.3 mm
◆ **PCIe Expansion Card (GPU/Add-on Cards) Recommendation**	Total maximum up to 150W (80W CPU with 16GB memory, 350W ATX Power)
	Total maximum up to 180W (35W CPU with 16GB memory, 350W ATX Power)

Backplane Options

Model No.	SBC Type	PCI	ISA	PCIe			PSU Connector
				x1	x4	x16	
PCI-5S2-RS	PICMG 1.0	4	1	0	0	0	AT
PCI-5S2A-RS	PICMG 1.0	4	1	0	0	0	ATX
PE-3S1	PICMG 1.3	0	0	0	1	1	ATX
PE-5S2	PICMG 1.3	0	0	3	0	1	ATX
PE-5S	PICMG 1.3	2	0	0	1	1	ATX
HPE-5S1	PCI/PICOe	4	0	0	0	0	ATX
HPE-5S2	PCI/PICOe	4	0	0	0	0	ATX
HPXE2-5S1	HPCIE	2	0	0	0	1	ATX

*Only R20 or later versions support PICMG 1.3 backplane.

Ordering Information

Part No.	Description
RACK-500AI-R10/A618C	5U Height 5 Slots Full size Chassis, Navy Blue and Black, 1x 8cm fan, with ACE-A618C-RS-R10(180W), RoHS
RACK-500AI-R10/FSP350	5U Height 5 Slots Full size Chassis, Navy Blue and Black, 1x 8cm fan, with FSP350-50FCB(350W), RoHS
CA-950GB-R10	19" Rackmount Carrier for RACK-500G/RACK-900G/ RACK-500AI

Power Supply Options

Type	Model No.	Watt
ATX	ACE-A618C-RS-R10	180W
	ACE-A225A-R11	250W
	63030-010350-000-RS	350W

RACK-500AI-R10 supports single 1U height AT type PSU. For more IEI PSU models, please refer to section 5 or visit www.ieiworld.com.

ECA-300

Tower Industrial Chassis



Features

- RoHS compliant design
- Supports ATX/microATX motherboard
- Two 5.25” drive bays and one 3.5”/2.5” HDD/SSD bay
- Seven expansion slots

Specifications

◆ **Construction**	Heavy duty metal
◆ **SBC Form Factor**	ATX/microATX
◆ **PSU**	PS/2 ATX power supply
◆ **Drive Bays**	2 x 5.25” 1 x 3.5"/2.5" HDD/SSD
◆ **Cooling Fans**	1
◆ **I/O Openings**	2 x USB 4 x USB 2 x COM
◆ **Expansion Slots**	7
◆ **Indicators**	1 x Power LED, 1 x HDD LED
◆ **Button**	1 x Reset button, 1 x Power switch
◆ **Installation**	Desktop, wall mount
◆ **Operating Temperature**	-10°C ~ 50°C
◆ **Operating Humidity**	5% ~ 95%
◆ **Color**	Silver
◆ **Dimensions (DxWxH)**	210 mm x 320 mm x 480.5 mm
◆ **Operating Vibration**	MIL-STD-810F 514.5C-1
◆ **Operating Shock**	Half-sine wave 3G, 11ms, 100 shocks per axis
◆ **Weight (Net/Gross)**	TBD

Ordering Information

Part No.	Description
ECA-300-R11	Mini-tower chassis, supports microATX or ATX motherboard, one 3.5” HDD/2.5” SSD bay, two 5.25” CD-ROM bays, supports PS/2 ATX power supply, RoHS

Power Supply Options

Type	Model No.	Watt
ATX	ACE-A160A-R11	600W
	ACE-4840APM-RS	400W
	ACE-A140A-R11	400W
	ACE-A130C-R10	300W

Dimensions *(Unit: mm)*

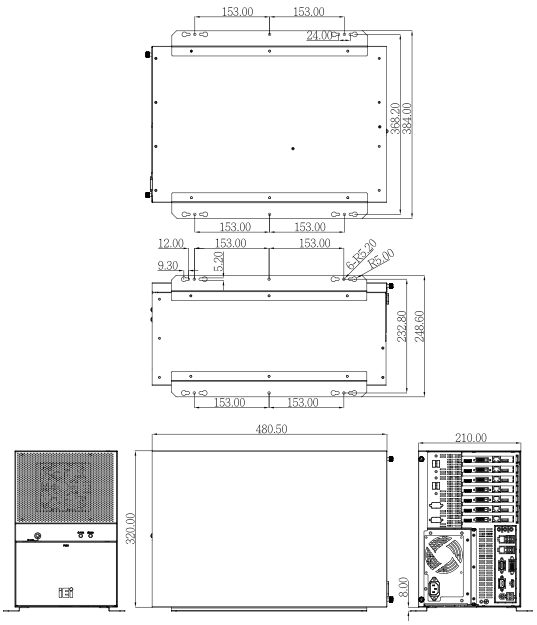

Compatible SBC

Model No.	SBC Type	PCI	PCIe			
			x1	x4	x8	x16
IMBA-Q470	ATX	3	0	3	0	1
IMBA-W480	ATX	3	0	3	0	1
IMBA-X570	ATX	2	0	2	0	2
IMBA-C2460	ATX	2	0	3	2	0
IMBA-Q370	ATX	2	0	3	2	0
IMBA-H310	ATX	4	0	1	0	1
IMBA-H112	ATX	4	0	1	0	1
IMBA-Q170-i2	ATX	2	0	3	2	0
IMBA-H110	ATX	6	0	0	0	1
IMBA-H810	ATX	4	2	0	0	1
IMBA-Q870-i2	ATX	4	1	1	0	1
IMB-Q870-i2	microATX	1	1	1	0	1
IMB-Q770	microATX	1	1	1	0	1
IMB-H810-i2	microATX	2	1	0	0	1
IMB-H610A	microATX	0	3	0	0	1

ECA-200 *Industrial Chassis*

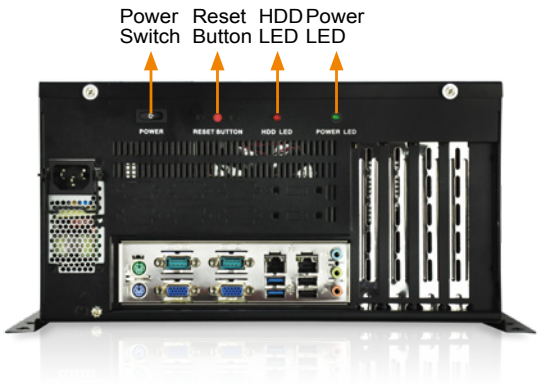



Features

- RoHS compliant design
- Supports microATX motherboard
- One 3.5” HDD or one 2.5” HDD/SSD bay
- Four expansion slots

Dimensions *(Unit: mm)*

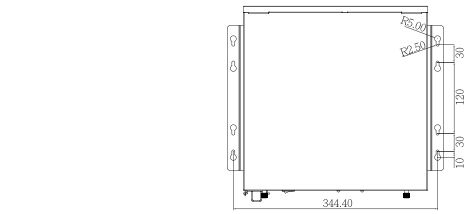

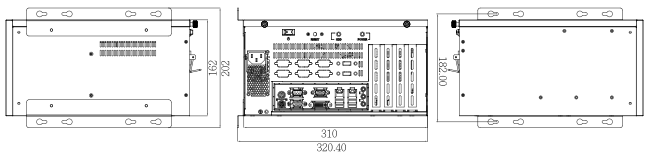

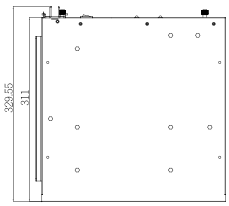

Specifications

◆ **Construction**	Heavy duty metal
◆ **SBC Form Factor**	microATX
◆ **PSU**	1U flex power supply
◆ **Drive Bays**	1 x 3.5"/2.5" HDD/SSD Expansion: 1 x 3.5”/2.5” HDD/SSD by the optional ECA-HDD-KIT-R10
◆ **Cooling Fans**	1
◆ **I/O Openings**	2 x USB 6 x COM
◆ **Expansion Slots**	4
◆ **Indicators**	1 x Power LED, 1 x HDD LED
◆ **Button**	1 x Reset button, 1 x Power switch
◆ **Installation**	Desktop, wall mount
◆ **Operating Temperature**	-10°C ~ 50°C
◆ **Operating Humidity**	5% ~ 95%
◆ **Color**	Black
◆ **Dimensions (DxWxH)**	310 mm x 310 mm x 162 mm
◆ **Operating Vibration**	MIL-STD-810F 514.5C-1
◆ **Operating Shock**	Half-sine wave 3G, 11ms, 100 shocks per axis
◆ **Weight (Net/Gross)**	TBD

Compatible SBC

Model No.	SBC Type	PCI	PCIe			
			x1	x4	x8	x16
IMB-Q870-i2	microATX	1	1	1	0	1
IMB-H810-i2	microATX	2	1	0	0	1
IMB-Q770	microATX	1	1	1	0	1
IMB-H810-i2	microATX	2	1	0	0	1
IMB-H610A	microATX	0	3	0	0	1
IMB-H110	microATX	2	1	0	0	1

Ordering Information

Part No.	Description
ECA-200-R20	Desktop/wall-mount industrial chassis, supports microATX motherboard and 1U ATX power supply, black, RoHS
ECA-HDD-KIT-R10	Additional 2.5”/3.5” HDD kit for ECA-100/ECA-200, R10

Power Supply Options

Type	Model No.	Watt
ATX	ACE-A615A-RS-R11	150W
	ACE-A618C-RS-R10	180W
	ACE-A622A-RS-R11	220W
	ACE-A627A-RS-R11	270W
	ACE-A630C-RS-R10	300W

ECA-100 *Industrial Chassis*

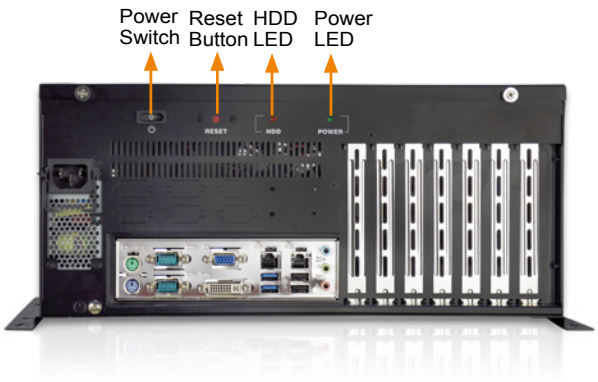



Features

- RoHS compliant design
- Supports ATX/microATX motherboard
- One 3.5” HDD or one 2.5” HDD/SSD bay
- Seven expansion slots

Specifications

◆ **Construction**	Heavy duty metal
◆ **SBC Form Factor**	ATX/microATX
◆ **PSU**	1U flex power supply
◆ **Drive Bays**	1 x 3.5”/2.5” HDD/SSD Expansion: 1 x 3.5”/2.5” HDD/SSD by the optional ECA-HDD-KIT-R10
◆ **Cooling Fans**	1
◆ **I/O Openings**	2 x USB 6 x COM
◆ **Expansion Slots**	7
◆ **Indicators**	Power LED, HDD LED
◆ **Button**	Power switch, reset button
◆ **Installation**	Desktop, wall mount
◆ **Operating Temperature**	-10°C ~ 50°C
◆ **Operating Humidity**	5% ~ 95%
◆ **Storage Temperature**	-20°C ~ 60°C
◆ **Color**	Black
◆ **Dimensions (DxWxH)**	365 mm x 291 mm x 162 mm
◆ **Operating Vibration**	MIL-STD-810F 514.5C-1
◆ **Operating Shock**	Half-sine wave 3G, 11ms, 100 shocks per axis
◆ **Weight (Net/Gross)**	TBD

Dimensions *(Unit: mm)*

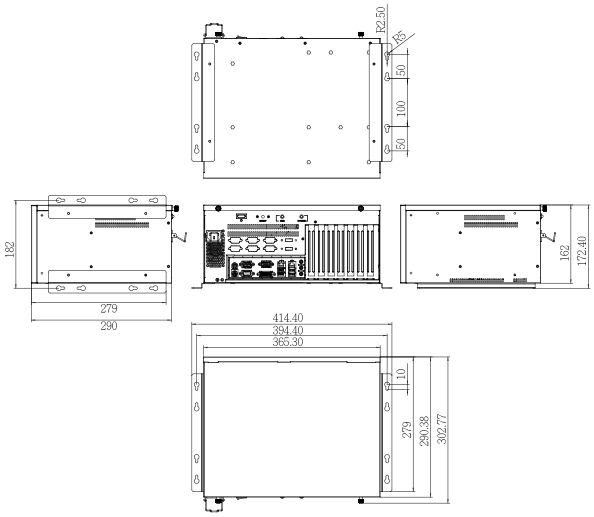

Ordering Information

Part No.	Description
ECA-100-R20	Desktop/wall-mount industrial chassis, supports ATX/microATX motherboard and 1U ATX power supply, black, RoHS
ECA-HDD-KIT-R10	Additional 2.5”/3.5” HDD kit for ECA-100/ECA-200, R10

Power Supply Options

Type	Model No.	Watt
ATX	ACE-A615A-RS-R11	150W
	ACE-A618C-RS-R10	180W
	ACE-A622A-RS-R11	220W
	ACE-A627A-RS-R11	270W
	ACE-A630C-RS-R10	300W

Compatible SBC

Model No.	SBC Type	PCI	PCIe			
			x1	x4	x8	x16
IMBA-Q470	ATX	3	0	3	0	1
IMBA-W480	ATX	3	0	3	0	1
IMBA-X570	ATX	2	0	2	0	2
IMBA-C2460	ATX	2	0	3	2	0
IMBA-Q370	ATX	2	0	3	2	0
IMBA-H310	ATX	4	0	1	0	1
IMBA-H112	ATX	4	0	1	0	1
IMBA-Q170-i2	ATX	2	0	3	2	0
IMBA-H110	ATX	6	0	0	0	1
IMBA-H810	ATX	4	2	0	0	1
IMBA-Q870-i2	ATX	4	1	1	0	1
IMBA-Q770	ATX	3	2	1	0	1
IMBA-Q670	ATX	4	1	1	0	1
IMBA-H610	ATX	4	2	0	0	1
IMB-H110	microATX	2	1	0	0	1
IMB-Q870-i2	microATX	1	1	1	0	1
IMB-H810-i2	microATX	2	1	0	0	1
IMB-Q770	microATX	1	1	1	0	1
IMB-H810-i2	microATX	2	1	0	0	1
IMB-H610A	microATX	0	3	0	0	1

PAC-1000G

6-slot Full-size Compact Chassis

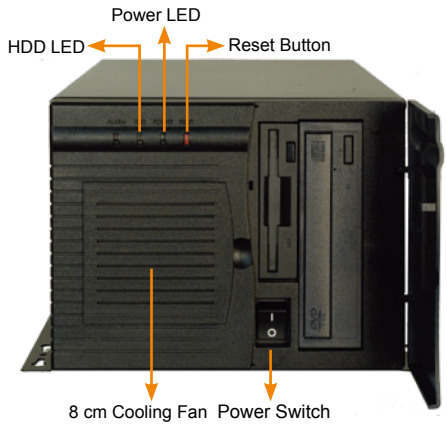

CD-ROM and HDD are not included in package

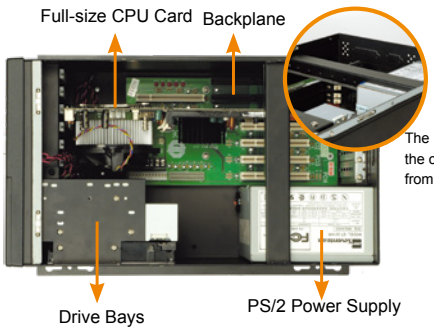

The hold-down clamp is designed to secure the cards within the chassis, protecting them from vibration.





Features

- RoHS compliant design
- One, 8 cm cooling fan with replaceable fan filter
- Plastic front panel with cover door

Specifications

◆ **Construction**	Metal with plastic front panel
◆ **SBC Form Factor**	Full-size, slot CPU card
◆ **Drive Bays**	1 x Front- accessible 3.5" 1 x 5.25" 1 x 3.5" HDD
◆ **Cooling Fans**	1 x 8 cm
◆ **I/O Openings**	1 x LPT, 1 x COM
◆ **Expansion Slots**	6 slots
◆ **Indicators**	Power, HDD
◆ **Button**	Power switch, reset
◆ **Operating Temperature**	0°C ~ 50°C
◆ **Operating Humidity**	10% ~ 90%
◆ **Color**	B: Black
◆ **Weight (Net/Gross)**	5.6 kg/8.8 kg
◆ **Dimensions (DxWxH)**	421 mm x 232 mm x 176 mm

Ordering Information

Part No.	Description
PAC-1000GB-R20/A130C	6-slot full-size compact chassis, white, 1 x 8 cm fan, with ACE-A130C-R10 (300W ATX model), RoHS

Dimensions *(Unit: mm)*

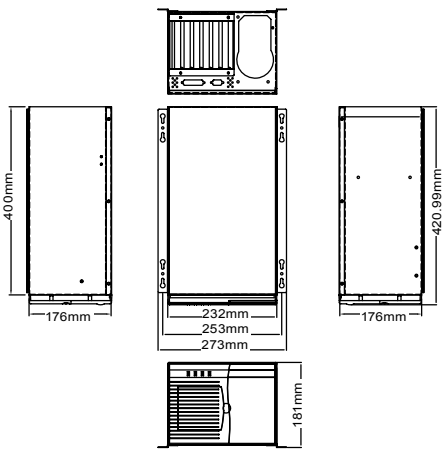

Backplane Options

Model No.	SBC Type	PCI	ISA	PCIe				PSU Connector
				x1	x4	x8	x16	
BP-6S-RS	ISA	0	6	0	0	0	0	AT
IP-6S-RS	PCISA	3	2	0	0	0	0	AT
IP-6SA-RS	PCISA	3	2	0	0	0	0	ATX
PCI-6S-RS	PICMG 1.0	4	2	0	0	0	0	AT/ATX
PCI-5S-RS	PICMG 1.0	3	1	0	0	0	0	AT/ATX
PE-6S2*	PICMG 1.3	3	0	0	1	0	1	ATX
SPE-4S	PICMG 1.3	0	0	0	1	2	0	ATX
SPE-6S	PICMG 1.3	0	0	0	5	0	0	ATX

*Only R20 or later versions support PICMG 1.3 backplane

Power Supply Options

Type	Model No.	Watt
AT	ACE-925AP-U-RS	250W
	ACE-T140A-RS	400W
ATX	ACE-A130C-R10	300W
	ACE-A140A-S-R11	400W
	ACE-828V-RS	250W

PAC-1000G supports single PS/2 PSU. For more IEI PSU models, please refer to section 5 or visit www.ieiworld.com.

PAC-106G

6-slot Full-size Compact Chassis

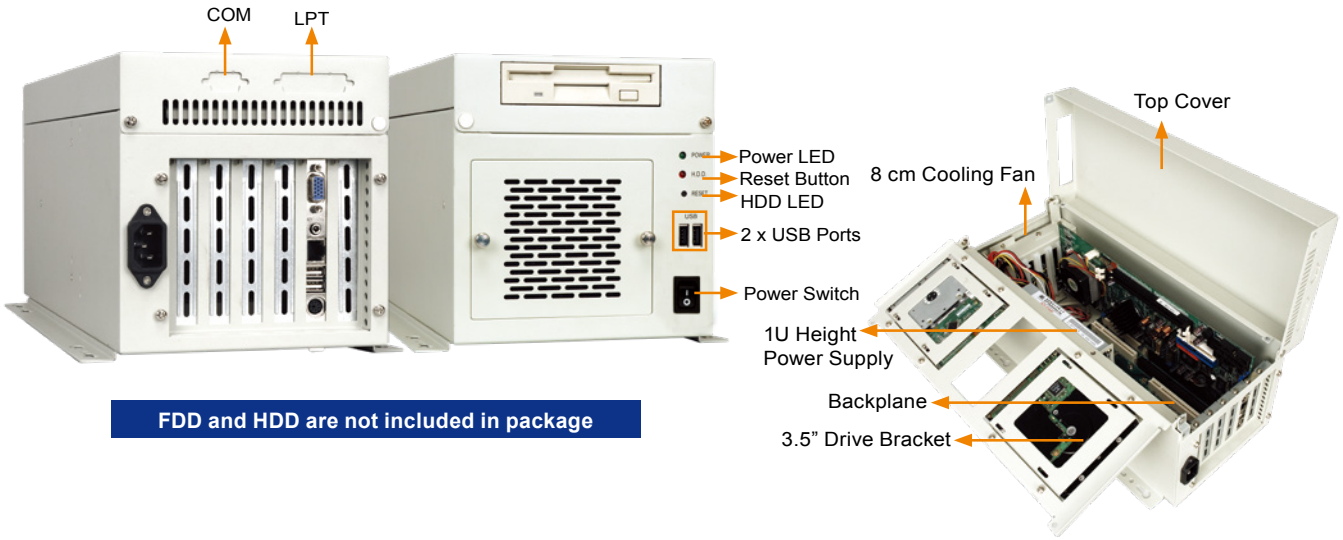

FDD and HDD are not included in package

Features

- RoHS compliant design
- Two USB ports on the front panel
- One 3.5" drive bay and one internal 3.5" HDD bay
- One 8 cm cooling fan

Specifications

◆ **Construction**	Heavy duty metal
◆ **SBC Form Factor**	Full-size, slot CPU card
◆ **Drive Bays**	1 x Front-accessible 3.5”
	1 x 3.5" HDD
◆ **Cooling Fans**	1 x 8 cm
◆ **I/O Ports**	2 x USB
◆ **I/O Openings**	1 x COM, 1 x LPT
◆ **Expansion Slots**	6 slots
◆ **Indicators**	Power, HDD
◆ **Button**	Power switch, reset
◆ **Operating Temperature**	0°C ~ 50°C
◆ **Operating Humidity**	10% ~ 90%
◆ **Color**	W: White
◆ **Weight (Net/Gross)**	5.2 kg/7.8 kg
◆ **Dimensions (DxWxH)**	400 mm x 166 mm x 175.5 mm

Ordering Information

Part No.	Description
PAC-106GW-R21/A618C	6-Slot Full size Chassis, White, 1x 8cm fan, with ACE-A618C-RS-R10(180W), RoHS

Dimensions *(Unit: mm)*

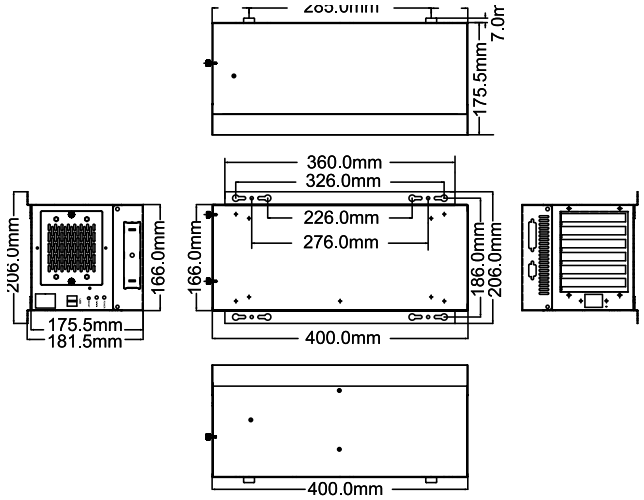

Backplane Options

Model No.	SBC Type	PCI	ISA	PCIe				PSU Connector
				x1	x4	x8	x16	
BP-6S-RS	ISA	0	6	0	0	0	0	AT
IP-6S-RS	PCISA	3	2	0	0	0	0	AT
IP-6SA-RS	PCISA	3	2	0	0	0	0	ATX
PCI-6S-RS	PICMG 1.0	4	2	0	0	0	0	AT/ATX
PE-6S2*	PICMG 1.3	3	0	0	1	0	1	ATX
SPE-4S	PICMG 1.3	0	0	0	1	2	0	ATX
SPE-6S	PICMG 1.3	0	0	0	5	0	0	ATX

*Only R20 or later versions support PICMG 1.3 backplane

Power Supply Options

Type	Model No.	Watt
ATX	ACE-A618C-RS-R10	180W

PAC-106G supports single 1U height PSU. For more IEI PSU models, please refer to section 5 or visit www.ieiworld.com.

PAC-1700G

7-slot Full-size Compact Chassis

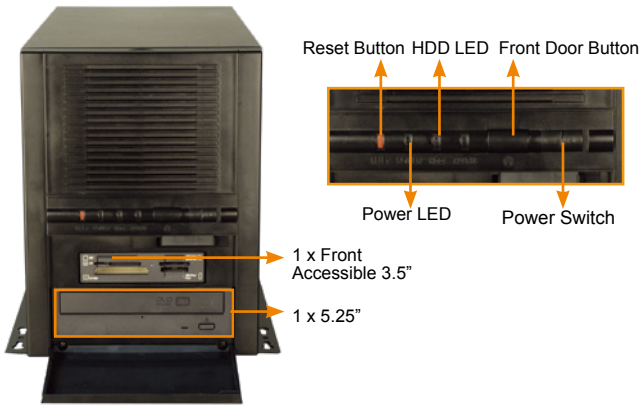

CD-ROM and HDD are not included in package.



Replaceable fan filter

8 cm cooling fan

Features

- RoHS compliant design
- One 5.25" and one 3.5" drive bay
- Two 3.5" internal HDD bays
- Seven expansion slots, compatible with full-size SBC
- 7 expansion slots, compatible with full-size SBC

Dimensions *(Unit: mm)*

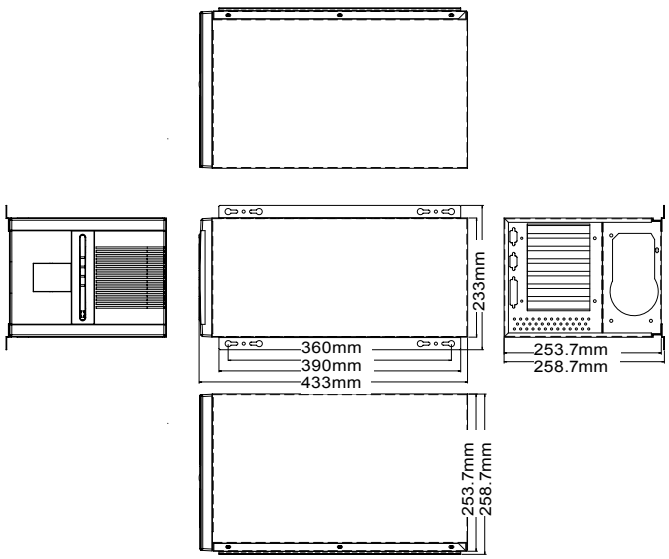

Specifications

◆ **Construction**	Metal with plastic front panel
◆ **SBC Form Factor**	Full-size, slot CPU card
◆ **Drive Bays**	1 x front-accessible 3.5"
	1 x 5.25"
	2 x 3.5" HDD
◆ **Cooling Fans**	1 x 8 cm
◆ **I/O Openings**	1 x LPT, 2 x COM
◆ **Expansion Slots**	7 slots
◆ **Indicators**	Power, HDD
◆ **Button**	Power switch, reset
◆ **Operating Temperature**	0°C ~ 50°C
◆ **Operating Humidity**	10% ~ 90%
◆ **Color**	B: Black
◆ **Weight (Net/Gross)**	6 kg/8.4 kg
◆ **Dimensions (DxWxH)**	433 mm x 233 mm x 253.7 mm

Backplane Options

Model No.	SBC Type	PCI	ISA	PCIe				PSU Connector
				x1	x4	x8	x16	
PCI-7S-RS	PICMG 1.0	4	3	0	0	0	0	AT/ATX
PE-7S*	PICMG 1.3	3	0	2	0	0	1	ATX
PE-7S2*	PICMG 1.3	1	0	4	0	0	1	ATX
HPXE2-7S1	HPCIE	3	0	0	0	2	0	ATX

*Only R20 or later versions support PICMG 1.3 backplane

Ordering Information

Part No.	Description
PAC-1700GB-R20/A130C	7-slot full-size compact chassis, black, 1 x 8 cm fan, with ACE-A130C-R10 (300W ATX model), RoHS

Power Supply Options

Type	Model No.	Watt
ATX	ACE-A130C-R10	300W
	ACE-A140A-S-R11	400W

PAC-1700G supports single PS/2 PSU. For more IEI PSU models, please refer to section 5 or visit www.ieiworld.com.

PAC-125G

10-slot Full-size Compact Chassis



CD-ROM and HDD are not included in package

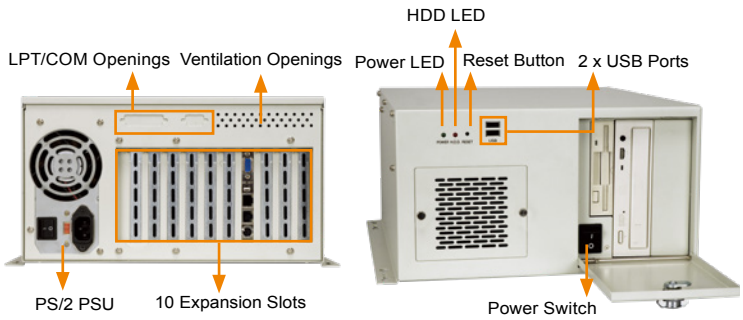

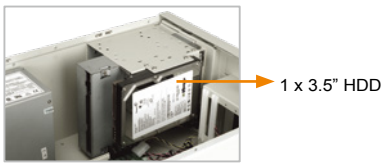

Features

- RoHS compliant design
- Two USB ports on the front panel
- One 80mm x 80mm x 25mm hot swappable cooling fan with fan filter
- 2 x 5.25", 1 x 3.5" HDD, 1 x front-accessible 3.5" drive bays
- Lockable door prevents unauthorized access

Specifications

◆ **Construction**	Heavy duty metal
◆ **SBC Form Factor**	Full-size, slot CPU card
◆ **Drive Bays**	2 x 5.25"
	1 x Front accessible 3.5"
	1 x 3.5" HDD
◆ **Cooling Fans**	80mm x 80mm x 25mm
◆ **I/O Ports**	2 x USB
◆ **I/O Openings**	1 x LPT, 1 x COM
◆ **Expansion Slots**	10 slots
◆ **Indicators**	Power, HDD
◆ **Button**	Power switch, reset
◆ **Operating Temperature**	0°C ~ 50°C
◆ **Operating Humidity**	10% ~ 90%
◆ **Color**	W: White
◆ **Weight (Net/Gross)**	7.2 kg/10.4 kg
◆ **Dimensions (DxWxH)**	420 mm x 321 mm x 176 mm

Ordering Information

Part No.	Description
PAC-125GW-R22/A130C	10-slot full-size compact chassis, white, 1 x 8cm fan, with ACE-A130C-R10 (300W ATX model), RoHS
PAC-125GW-R22/ACE-925AP	10-slot full-size chassis, white, with ACE-925AP PSU (200W), RoHS

Dimensions *(Unit: mm)*

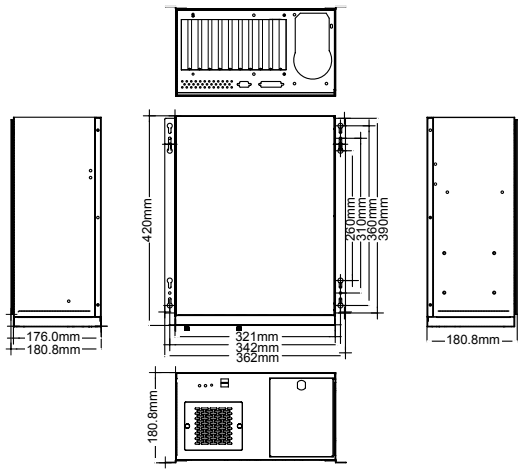

Backplane Options

Model No.	SBC Type	PCI	ISA	PCIX	PCIe				PSU Connector
					x1	x4	x8	x16	
BP-10S-RS	ISA	0	10	0	0	0	0	0	AT
PCI-10S-RS	PICMG 1.0	4	5	0	0	0	0	0	AT/ATX
PX-10S-RS	PICMG 1.0	7	3	0	0	0	0	0	AT/ATX
IP-10S-RS	PCISA	4	5	0	0	0	0	0	AT/ATX
IPX-9S-RS	PCISA	8	0	0	0	0	0	0	AT/ATX
HPE-8S	PCI/PICOe	4	0	0	2	0	0	0	ATX
PE-6S	PICMG 1.3	2	0	0	2	0	0	1	ATX
PE-8S*	PICMG 1.3	3	0	0	3	0	0	1	ATX
SPE-9S	PICMG 1.3	3	0	0	0	3	1	0	ATX

*Only R20 or later versions support PICMG 1.3 backplane

Power Supply Options

Type	Model No.	Watt
AT	ACE-925AP-U-RS	250W
	ACE-935AL-RS	300W
ATX	ACE-A130C-R10	300W
	ACE-A140A-S-R11	400W
	ACE-A160A-R11	600W

PAC-125G supports single PS/2 PSU. For more IEI PSU models, please refer to section 5 or visit www.ieiworld.com.

PAC-53GH

3-slot Half-size Compact Chassis

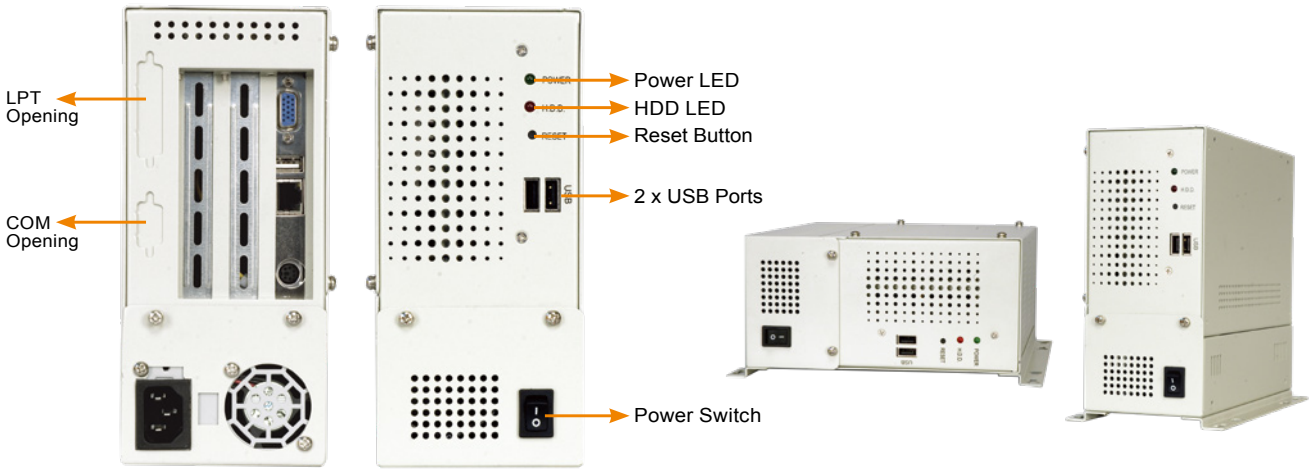

HDD is not included in package

Features

- RoHS compliant design
- Two USB ports on the front panel
- One 2.5” internal HDD bay

Specifications

◆ **Construction**	Heavy duty metal
◆ **SBC Form Factor**	Half-size, slot CPU cards
◆ **Drive Bays**	1 x 2.5" HDD
◆ **I/O Ports**	2 x USB
◆ **I/O Openings**	1 x LPT, 1 x COM
◆ **Expansion Slots**	3 slots
◆ **Indicators**	Power, HDD
◆ **Button**	Power switch, reset
◆ **Operating Temperature**	0°C ~ 50°C
◆ **Operating Humidity**	10% ~ 90%
◆ **Color**	W: White
◆ **Weight (Net/Gross)**	2 kg/3.8 kg
◆ **Dimensions (DxWxH)**	218 mm x 95 mm x 200 mm

Ordering Information

Part No.	Description
PAC-53GHW-R11/A618C	3-Slot Half-size Chassis, White, with ACE-A618C-RS-R10(180W), RoHS

Dimensions *(Unit: mm)*

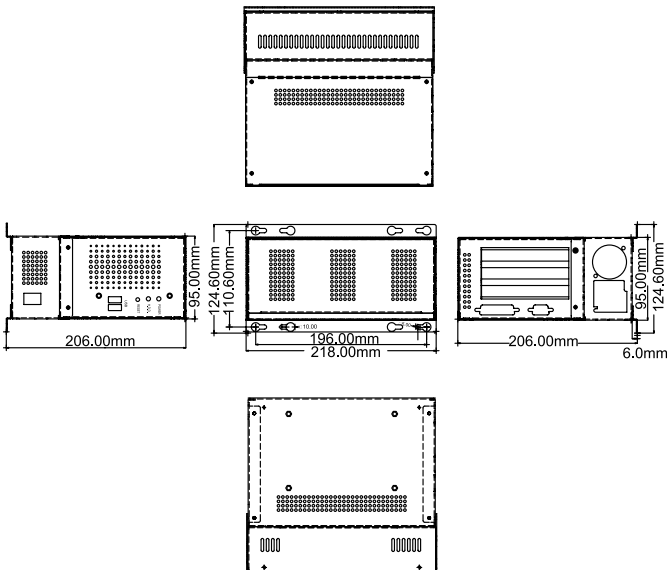

Backplane Options

Model No.	SBC Type	PCI	ISA	PCIe			PSU Connector
				x1	x4	x16	
BP-3S-RS	ISA	0	3	0	0	0	AT
IP-3S-RS	PCISA	2	0	0	0	0	AT

Power Supply Options

Type	Model No.	Watt
ATX	ACE-A618C-RS-R10	180W
	ACE-4520C-RS	200W

PAC-53GH supports single 1U height PSU. For more IEI PSU models, please refer to section 5 or visit www.ieiworld.com.

PAC-42GH

4-slot Half-size Compact Chassis



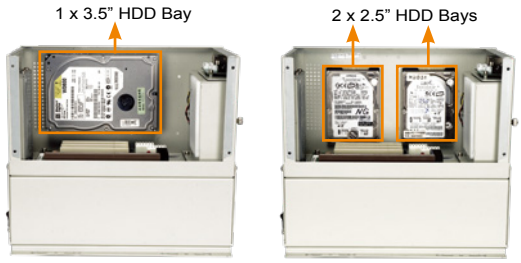

FDD and HDD are not included in package

Features

- Two USB ports on the front panel
- One 8 cm cooling fan with replaceable filter
- Supports one 3.5" HDD or two 2.5" HDDs

Specifications

◆ **Construction**	Heavy duty metal
◆ **SBC Form Factor**	Half-size, slot CPU cards
◆ **Drive Combinatons**	1 x Front-accessible 3.5" and 1 x 3.5" HDD or 1 x Front-accessible 3.5" and 2 x 2.5" HDD
◆ **Cooling Fans**	1 x 8 cm
◆ **I/O Ports**	2 x USB
◆ **I/O Openings**	1 x LPT, 1 x COM
◆ **Expansion Slots**	4 slots
◆ **Indicators**	Power, HDD
◆ **Button**	Power switch, reset
◆ **Operating Temperature**	0°C ~ 50°C
◆ **Operating Humidity**	10% ~ 90%
◆ **Color**	W: White
◆ **Weight (Net/Gross)**	3.9 kg/6.1 kg
◆ **Dimensions (DxWxH)**	269 mm x 140 mm x 230 mm

Ordering Information

Part No.	Description
PAC-42GHWPX-R11/A618C	4-Slot Half-size Chassis, White, 1x 8cm fan, with ACE-A618C-RS-R10(180W), RoHS

Dimensions *(Unit: mm)*

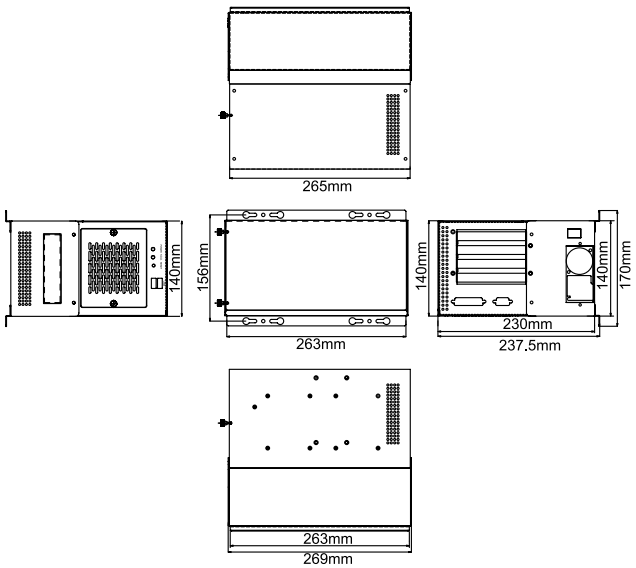

Backplane Options

Model No.	SBC Type	PCI	ISA	PCIe			PSU Connector
				x1	x4	x16	
BP-4S-RS	ISA	0	4	0	0	0	AT
IP-4S-RS	PCISA	3	0	0	0	0	AT
IP-4S2-RS	PCISA	2	1	0	0	0	AT
HPE-4S1	PCI/PICOe	3	0	0	0	0	ATX
HPE-4S2	PCI/PICOe	2	0	0	1	0	ATX

Power Supply Options

Type	Model No.	Watt
ATX	ACE-A618C-RS-R10	180W

PAC-42GH supports single 1U height PSU. For more IEI PSU models, please refer to section 5 or visit www.ieiworld.com.

PR-1500G

5-slot Half-size Compact Chassis

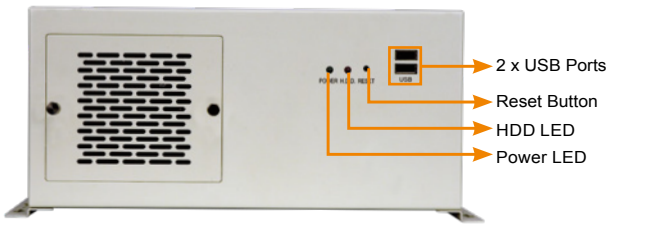

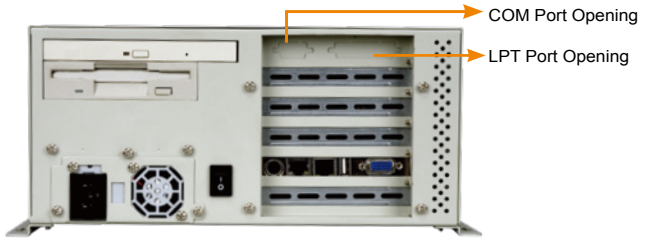

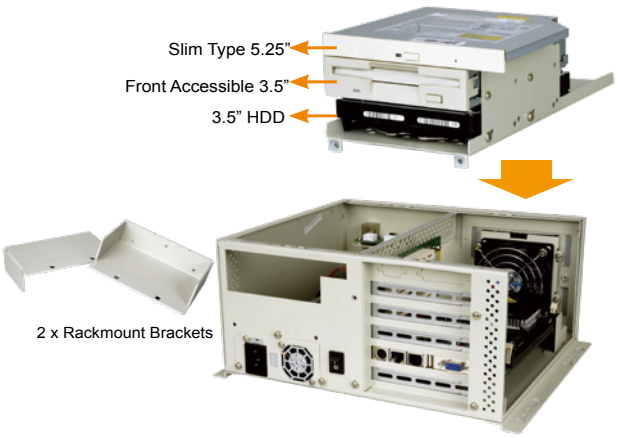

CD-ROM and HDD are not included in package.

Features

- RoHS compliant design
- One slim type 5.25" drive bay
- One 3.5" drive bay and one internal 3.5" HDD bay
- Two USB ports on the front panel
- One 8 cm cooling fan

Specifications

◆ **Construction**	Heavy duty metal
◆ **SBC Form Factor**	Half-size, slot SBC
◆ **Drive Bays**	1 x 3.5" HDD 1 x Front accessible 3.5” 1 x Slim 5.25”
◆ **Cooling Fans**	1 x 8 cm
◆ **I/O Ports**	2 x USB
◆ **I/O Openings**	1 x LPT, 1 x COM
◆ **Expansion Slots**	5 slots
◆ **Indicators**	Power, HDD
◆ **Button**	Power switch, reset
◆ **Operating Temperature**	0°C ~ 50°C
◆ **Operating Humidity**	10% ~ 90%
◆ **Color**	W: White
◆ **Weight (Net/Gross)**	3.6 kg/6.2 kg
◆ **Dimensions (DxWxH)**	254 mm x 286 mm x 132 mm

Ordering Information

Part No.	Description
PR-1500GW-R12/A618C	5-Slot Half-size Chassis, White, 1x 8cm fan, with ACE-A618C-RS-R10(180W), RoHS

Dimensions *(Unit: mm)*

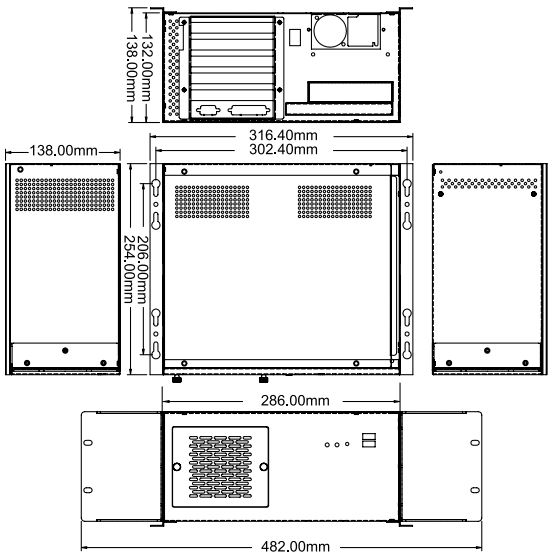

Backplane Options

Model No.	SBC Type	PCI	ISA	PCIe			PSU Connector
				x1	x4	x16	
BP-5S-RS	ISA	0	5	0	0	0	AT
IP-5SA2-RS	PCISA	4	1	0	0	0	ATX
HPE-5S1	PICO/PICOe	4	0	0	0	0	ATX
HPE-5S2	PICO/PICOe	3	0	0	1	0	ATX
HPXE2-5S1	HPCIE	2	0	0	0	1	ATX

Power Supply Options

Type	Model No.	Watt
ATX	ACE-A618C-RS-R10	180W
	ACE-A225A-R11	250W

PR-1500G supports single 1U height PSU. For more IEI PSU models, please refer to section 5 or visit www.ieiworld.com.

PAC-400G

5-slot Half-size Compact Chassis

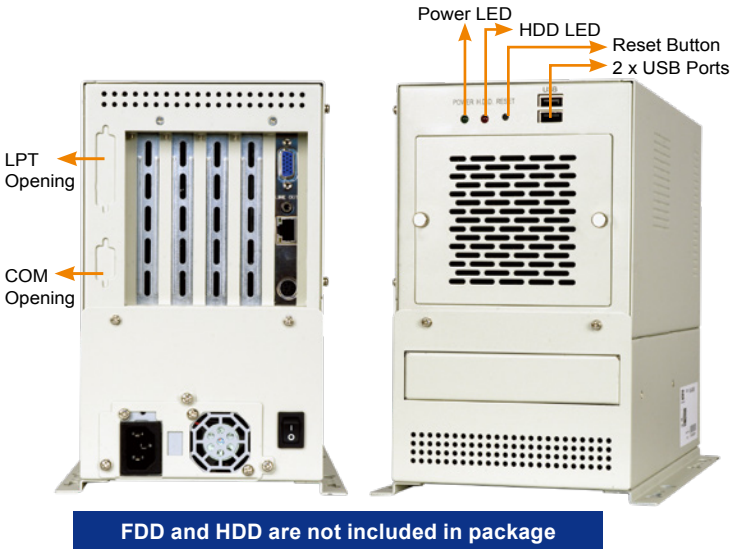



3.5" SATA removable drive bay compatible

FDD and HDD are not included in package

Features

- RoHS compliant design
- Two USB ports on the front panel
- One 8 cm hot swappable fan
- One 3.5" internal HDD bay
- One 3.5" drive bay, for optional removable drive
- Supports Pentium® 4 half-size CPU card

Dimensions *(Unit: mm)*

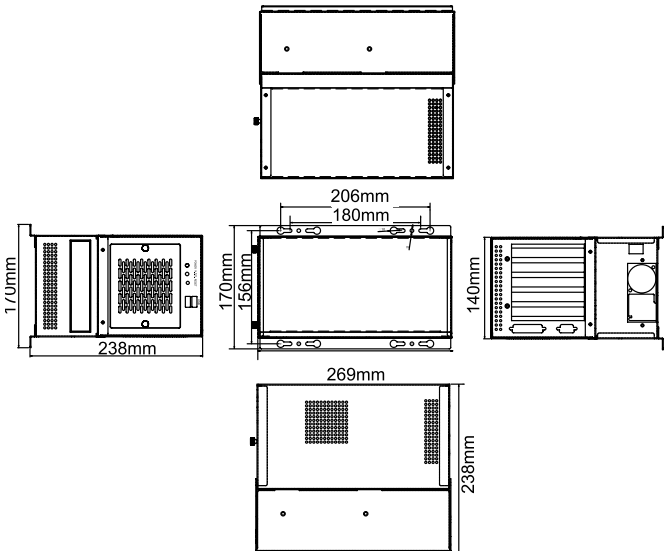

Specifications

◆ **Construction**	Heavy duty metal
◆ **SBC Form Factor**	Half-size, slot SBC
◆ **Drive Bays**	1 x 3.5" HDD
◆ **Cooling Fans**	1 x 8 cm
◆ **I/O Ports**	2 x USB
◆ **I/O Openings**	1 x LPT, 1 x COM
◆ **Expansion Slots**	5 slots
◆ **Indicators**	Power, HDD
◆ **Button**	Power switch, reset
◆ **Operating Temperature**	0°C ~ 50°C
◆ **Operating Humidity**	10% ~ 90%
◆ **Color**	W: White
◆ **Weight (Net/Gross)**	3.8 kg/5.6 kg
◆ **Dimensions (DxWxH)**	269 mm x 140 mm x 230.5mm

Backplane Options

Model No.	SBC Type	PCI	ISA	PCIe			PSU Connector
				x1	x4	x16	
BP-4S-RS	ISA	0	4	0	0	0	AT
IP-4S-RS	PCISA	3	0	0	0	0	AT
IP-4S2-RS	PCISA	2	1	0	0	0	AT
IP-4S2A-RS	PCISA	3	0	0	0	0	ATX
HPE-4S1	PCI/PICOe	3	0	0	0	0	ATX
HPE-4S2	PCI/PICOe	2	0	0	1	0	ATX

Ordering Information

Part No.	Description
PAC-400GW-R11/A618C	5-Slot Half-size Industrial Chassis, WHite, 1x 8cm fan, witH ACE-A618C-RS-R10(180W), RoHS
7G000-ST1110L-RS	3.5" SATA removable drive bay with keylock, white, RoHS

Power Supply Options

Type	Model No.	Watt
ATX	ACE-A618C-RS-R10	180W

PAC-400G supports single 1U height PSU. For more IEI PSU models, please refer to section 5 or visit www.ieiworld.com.

PAC-400AI

5-slot Half-size Compact Chassis

New

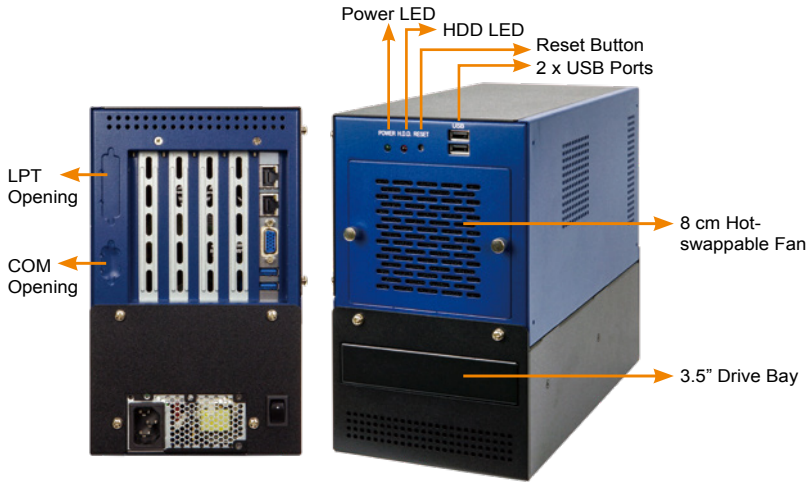

Features

- RoHS compliant design
- Two USB ports on the front panel
- One 8 cm hot-swappable fan
- One 3.5" internal HDD bay
- One 3.5" drive bay, for optional removable drive
- Supports half-size CPU card

FDD and HDD are not included in the package

Specifications

◆ **Construction**	Heavy duty metal
◆ **SBC Form Factor**	Half-size CPU card
◆ **Drive Bay**	1 x 3.5" HDD
◆ **Cooling Fan**	1 x 8 cm
◆ **I/O Ports**	2 x USB
◆ **I/O Openings**	1 x LPT, 1 x COM
◆ **Expansion Slots**	5 slots
◆ **Indicators**	Power, HDD
◆ **Button**	Power switch, reset button
◆ **Operating Temperature**	0°C ~ 50°C
◆ **Operating Humidity**	10% ~ 90%
◆ **Color**	Navy blue and black
◆ **Weight (Net/Gross)**	3.8 kg/5.6 kg
◆ **Dimensions (DxWxH)**	269 mm x 140 mm x 230.5 mm
◆ **PCIe Expansion Card (GPU/Add-on Cards) Recommendation**	Total maximum up to 150W (80W CPU with 16GB memory, 350W ATX Power)
	Total maximum up to 180W (35W CPU with 16GB memory, 350W ATX Power)

Dimensions *(Unit: mm)*

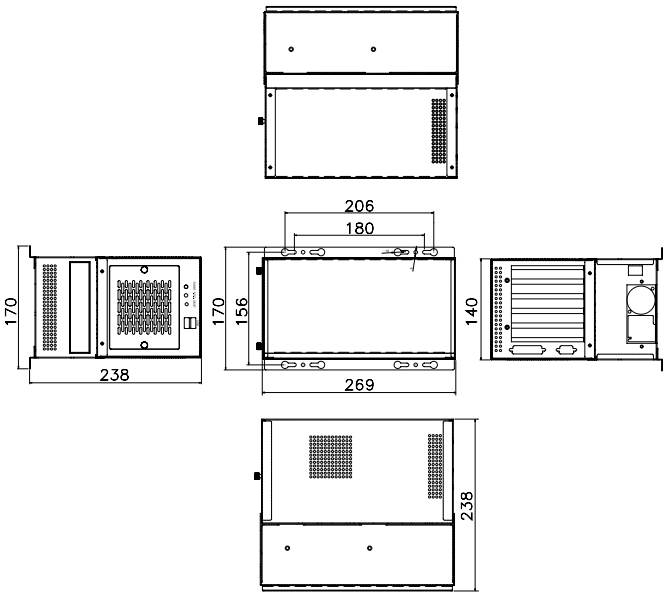

Backplane Options

Model No.	SBC Type	PCI	ISA	PCIe			PSU Connector
				x1	x4	x16	
HPE2-3S1	HPCIE	0	0	0	1	1	ATX
HPXE2-5S1	HPCIE	2	0	0	0	1	ATX
HPE-5S1	PCI/PICOe	4	0	0	0	0	ATX
HPE-5S2	PCI/PICOe	3	0	0	1	0	ATX
BP-5S-RS	ISA	0	5	0	0	0	AT
IP-5SA2-RS	PCISA	4	1	0	0	0	ATX

* PAC-400AI Chassis supported backplanes are different with PAC-400G

Ordering Information

Part No.	Description
PAC-400AI-R10/A618C	5-Slot Half-size Industrial Chassis, navy blue and black, 1x 8cm fan, with ACE-A618C-RS-R10 (180W), RoHS
PAC-400AI-R10/FSP250	5-Slot Half-size Industrial Chassis, navy blue and black, 1x 8cm fan, with FSP250 (250W), RoHS
7G000-ST1110L-RS	3.5" SATA removable drive bay with keylock, white, RoHS

Power Supply Options

Type	Model No.	Watt
ATX	ACE-A618C-RS-R10	180W
	63030-010250-300-RS	250W
	63030-010350-000-RS	350W

PAC-400AI-R10 supports single 1U height PSU. For more IEI PSU models, please refer to section 5 or visit www.ieiworld.com.

PAC-700G *7-slot Half-size Compact Chassis*

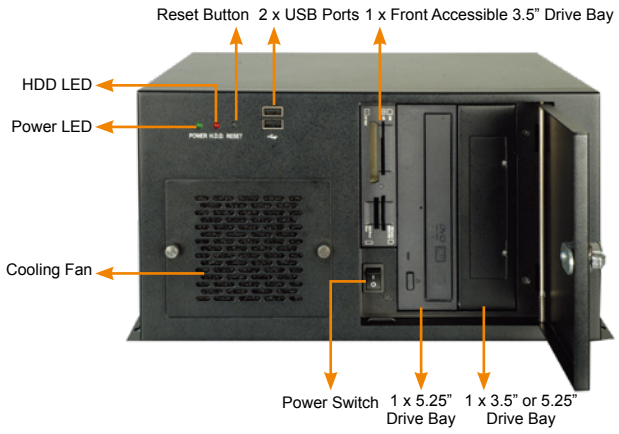

CD-ROM, and HDD are not included in package.



Easy hot-swappable fan



Step 1: Loosen the thumb screws

Step 2: Pull the fan out gently

Step 3: Unplug the power connector

Features

- RoHS compliant design
- Two USB ports on the front panel
- One, 8 cm cooling fan with fan filter
- Easy access design for quick fan replacement
- Lockable door prevents unauthorized access

Specifications

◆ **Construction**	Heavy duty metal
◆ **SBC Form Factor**	Half-size, slot CPU card
◆ **Drive Combinations**	2 x 5.25" + 1 x Front accessible 3.5" or 1 x 5.25" + 2 x Front accessible 3.5" or 1 x 5.25" + 1 x Front accessible 3.5" + 1 x 3.5" HDD
◆ **Cooling Fans**	1 x 8 cm
◆ **I/O Ports**	2 x USB on front panel
◆ **I/O Openings**	2 x LPT, 2 x COM
◆ **Expansion Slots**	7 slots
◆ **Indicators**	Power, HDD
◆ **Button**	Power switch, reset
◆ **Operating Temperature**	0°C ~ 50°C
◆ **Operating Humidity**	10% ~ 90%
◆ **Color**	B: Black
◆ **Weight (Net/Gross)**	6.2 kg/9 kg
◆ **Dimensions (DxWxH)**	279 mm x 321 mm x 176 mm

Ordering Information

Part No.	Description
PAC-700GB-R11/A618C	7-Slot Half-size chassis, Black, with ACE-A618C-RS-R10(180W), RoHS

Dimensions *(Unit: mm)*

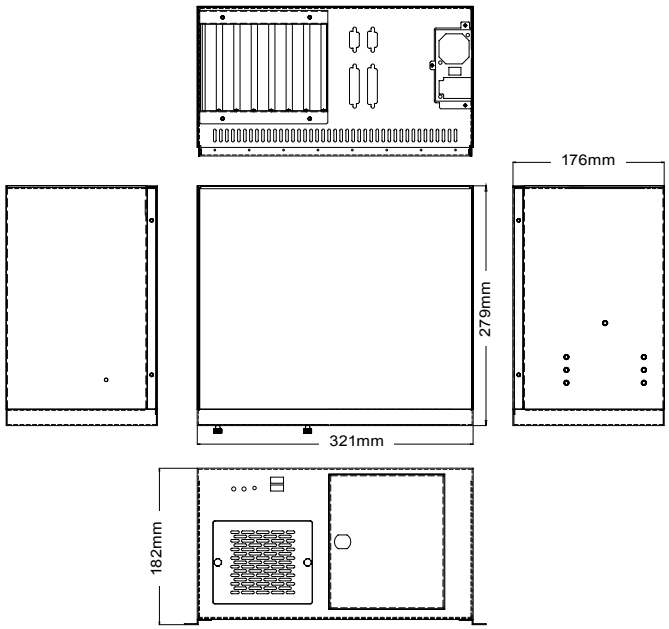

Backplane Options

Model No.	SBC Type	PCI	ISA	PCIe				PSU Connector
				x1	x4	x8	x16	
BP-7S-RS	ISA	0	7	0	0	0	0	AT
HPXE2-7S1	HPCIE	3	0	0	0	2	0	ATX

Power Supply Options

Type	Model No.	Watt
ATX	ACE-A618C-RS-R10	180W
	ACE-A225A-R11	250W

PAC-700G supports single 1U height PSU. For more IEI PSU models, please refer to section 5 or visit www.ieiworld.com.

Power Supply

IEI power supply solutions are complete and flexible. Normal (PS2, 1U, 2U) or redundant form, close or open frame, DC or AC input, AT or ATX model, 10 to 600 watts or higher, all of these features are available within a reliable and highly efficient power solution.

IEI's embedded system power supply solution is efficient and stable. IEI also provides customized power supply services to meet your demands.

Selection

Open Frame
- Fanless Chassis



1U Series
- 1U Chassis



2U Series
- 1U ~ 2U Chassis



PS2 Series
- 2U ~ 4U Chassis



Redundant
- 2U ~ 4U Chassis



Adapter
- LCD Monitor
- AFL Series
- Embedded System



DC to DC Module
- Battery Backup System
- Embedded System
- Mobile Auto Solution





AC-DC Adapter

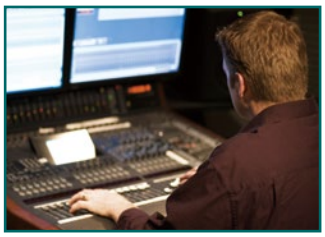

Type	Temperature
AC-DC Adapter	0°C ~ 40°C

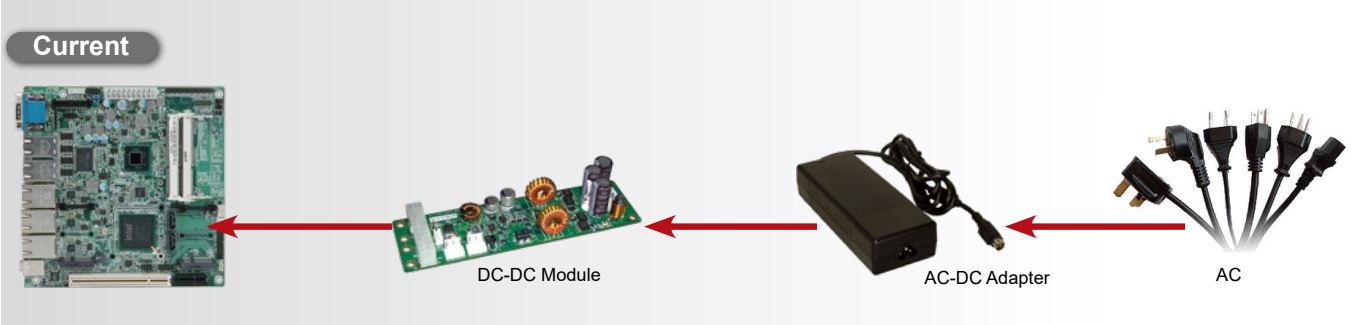

Wide Temperature

0°C ~ 70°C

Item	Model	Watt	AC/DC
1U	ACE-717CX	170W	24 DC

Medical

Item	Model	Watt	AC/DC
PS/2	ACE-4840APM	400W	AC

-20°C ~ 70°C

Item	Model	Watt	AC/DC
PS/2	ACE-A160A	600W	AC
	ACE-A140A	400W	AC
	ACE-828A	280W	AC
	ACE-828M	280W	AC
	ACE-932T	300W	48 DC
1U	ACE-716AP	150W	AC
	ACE-716C	150W	24 DC

80 PLUS & ErP

■ 80 PLUS

The 80 PLUS power supply saves energy and money to keep up with the latest market trends.

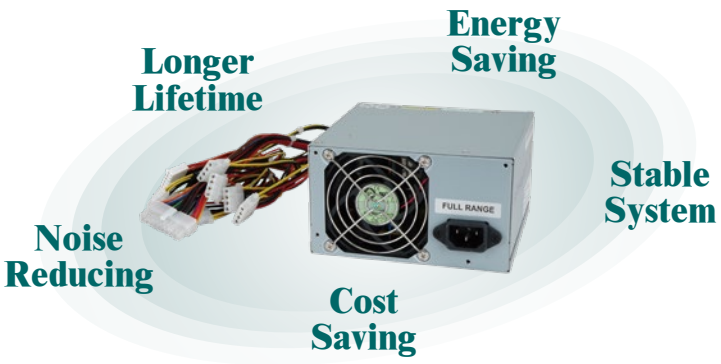

Efficiency Trend

Multiple output for computers and servers Eff. ≥ 80% at 20%, 50% and 100% of rated load PFC ≥ 0.9

	80 PLUS	80 PLUS BRONZE	80 PLUS SILVER	80 PLUS GOLD
20% (loading)	80%	82%	85%	87%
50% (loading)	80%	85%	88%	87%
100% (loading)	80%	82%	85%	87%

■ **Energy Saving**
A high efficiency power supply saves energy by reducing the amount of energy used during the current transferring process.

■ **System Reliability**
Reducing the heat output helps to lower the system temperature and increase system reliability.

■ **Cost Saving**
A high efficiency power supply reduces energy consumption, which means savings on your electric bills.

■ **Noise Reducing**
A high efficiency power supply can achieve a lower operating temperature. When the fan operates at a lower speed, it produces less noise.

■ **Longer Lifetime**
A high efficiency power supply can reduce heat generated inside the power supply and increase its operating hours.

■ ErP

ErP ➔ Energy-Related Products

These products are aimed at improving energy efficiency and reducing energy consumption.
Scope: Anything that is Class B EMC (Class A out of scope)



Power Supply
Off mode & Standby mode

Off mode	≤ 1.0 W
Standby mode	≤ 1.0 W

Adapter
Maximum Energy Consumption in No-Load Mode

Output power	AC-DC external power supplies, except low voltage external power supplies	Low voltage external power supplies
≤ 51W	0.30W	0.30W
Po > 51W	0.50W	N/A

Open Frame Selection Guide

Safety (ITE Stardard) - CB IEC 60950, UL 60950, CSA C 22.2 No. 60950, TUV EN 60950
Safety (Medical Stardard) - CB IEC 60601, UL 60601, CSA C 22.2 No. 60601, TUV EN 60601
EMI - Meets EN 55022, FCC Part 15, CISPR 22
Meets EN 61000-3-2, EN 61000-3-3 (PFC function)
EMS - Meets EN 55024, EN 61000-4-2/3/4/5/6/8/11

** For detailed specs, please refer to official certification*

AC Input

Product	Model No.	Watt AT/ATX PFC	Input Range	Output Current Range					Efficiency	Operating Temperature	Safety	Dimensions (mm)
			Voltage	+5 V	+12 V	-5 V	-12 V	+5 Vsb				
	ACE-890A	86W AT -	85 ~ 264 VAC	10 A	2.5 A		0.5 A		70%	0°C ~ 50°C	CSA CE	152.4 x 89 x 39

Open Frame AC Input AT Type

ACE-890A

86 W AC-DC Open Frame AT Power Supply

86W



CB cULus PFC

Specifications

Input Type	85 ~ 264 VAC Full Range				
Input Frequency	47 Hz ~ 63 Hz				
Input Current	2A (RMS)@115VAC, 1A (RMS)@230VAC				
Inrush Current	25A max. for 115VAC, 50A max. for 230VA				
Output Voltage	+5 V	+12 V	-5 V	-12 V	+24 V
ACE-890A	10 A	2.5 A		0.5 A	
Efficiency	70%				
Temperature	0°C ~ 50°C (Operating), -20°C ~ 85°C (Storage)				
MTBF (hrs)	268,000				
Output Connector	Optional cable				
Dimensions (mm)	152.4 x 89 x 39				

Dimensions (Unit: mm)

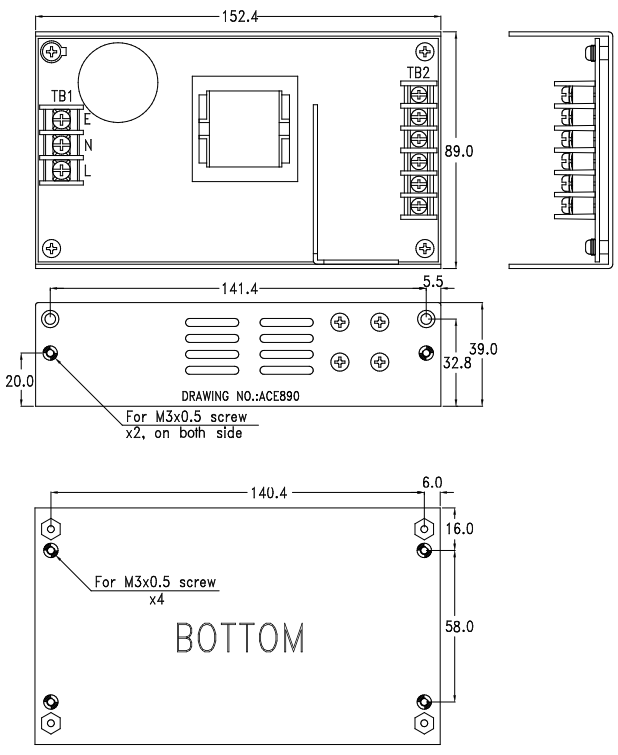

Ordering Information

Part No.	Description
ACE-A630C-R10	1U Flex ATX 300W Power Supply, 90~264 VAC, ErP, CCL, RoHS

1U/2U Type Selection Guide

Safety (ITE Standard) - CB IEC 60950, UL 60950, CSA C 22.2 No. 60950, TUV EN 60950
Safety (Medical Standard) - CB IEC 60601, UL 60601, CSA C 22.2 No. 60601, TUV EN 60601
EMI - Meets EN 55022, FCC Part 15, CISPR 22
Meets EN 61000-3-2, EN 61000-3-3 (PFC function)
EMS - Meets EN 55024, EN 61000-4-2/3/4/5/6/8/11

** For detailed specs, please refer to official certification*

1U AC Input

Products	Model No.	Watt AT/ ATX PFC	Input Range	Output Current Range							Efficiency	ErP	Operating Temperature	Safety	Dimensions (mm)
			Voltage	+3.3 V	+5 V	+12 V	-5 V	-12 V	+5 Vsb	+24 V					
	ACE-A630C	300W ATX -	90 ~ 265 VAC	12 A (0 A)	14 A (0 A)	25 A (0.1 A)		0.5 A	3 A		80 PLUS BRONZE 87%	V	0°C ~ 50°C	CB/UL/ TUV/ CCC/ CE/FCC	150 x 81.5 x 40.5
	ACE-A622C	220W ATX -	90 ~ 264 VAC	10 A (0.1 A min.)	14 A (0.2 A min.)	14 A (0.6 A min.)		0.3 A	2.5 A		80 PLUS SILVER 85%	V	0°C ~ 50°C	CB/UL/ TUV/ CCC/ CE/FCC	150 x 81.5 x 40.5
	ACE-A618C	180W ATX -	90 ~ 264 VAC	10 A (0.1 A min.)	14 A (0.2 A min.)	10 A (0.6 A min.)		0.3 A	2.5 A		80 PLUS 85%	V	0°C ~ 50°C	CB/UL/ TUV/ CCC/ CE/FCC	150 x 81.5 x 40.5
	ACE-A615C	150W ATX -	90 ~ 264 VAC	10 A (0.1 A min.)	14 A (0.2 A min.)	10 A (0.6 A min.)		0.3 A	2.5 A		80 PLUS SILVER 85%	V	0°C ~ 50°C	CB/UL/ TUV/ CCC/ CE/FCC	150 x 81.5 x 40.5
	ACE-716AP	150W AT PFC	85 ~ 265 VAC		18 A (1 A min.)	4 A	0.5 A	1 A			75%		-20°C ~ 70°C	UL TUV CE	198 x 97 x 40.5

1U DC Input

Products	Model No.	Watt AT/ ATX PFC	Input Range	Output Current Range							Efficiency	Operating Temperature	Safety	Dimensions (mm)
			Voltage	+3.3 V	+5 V	+12 V	-5 V	-12 V	+5 Vsb	+24V				
	ACE-A4520D	250W ATX -	24 VDC (18 ~ 36 VDC)	10 A	14 A	18 A (0.05A min.)		0.3 A	2.5 A		80%	0°C ~ 50°C	CB UL TUV CCC NEMKO CE FCC	150 x 81.5 x 40.5
	ACE-716C	150W AT -	24 VDC (19 ~ 30 VDC)		18 A (2 A min.)	4 A	0.5 A	1 A			70%	-20°C ~ 70°C	UL TUV CE	198 x 97 x 40.5

1U AC Input ATX Type

ACE-A630C

1U Flex ATX 300 W Power Supply

300W



Specifications

Input Type	90~264VAC Full Range				
Output Voltage	+3.3 V	+5 V	+12 V	-12 V	+5 Vsb
	12 A (0 A)	14 A (0 A)	25 A (0.1 A)	0.3 A	3 A
Efficiency	87%				
Temperature	Operating: 0°C ~ 50°C, Storage: -40°C ~ 80°C				
MTBF (hrs)	100,000				
Output Connector	20+4-pin ATX, 4-pin 12V CPU, 1 x FDD, 1 x HDD, 2 x SATA, 2 x Graphics card power				
Dimensions (mm)	150 x 81.5 x 40.5				

Dimensions (Unit: mm)

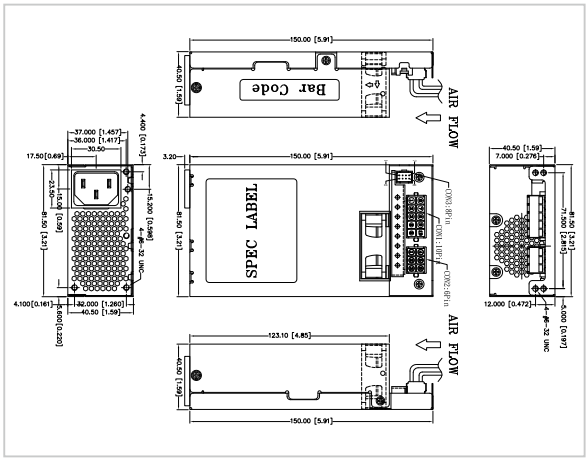

Ordering Information

Part No.	Description
ACE-A630C-R10	1U Flex ATX 300W Power Supply, 90~264 VAC, ErP, CCL, RoHS

ACE-A622C

220 W 1U Type ATX Power Supply

220W



Specifications

Input Type	90~264 VAC Full Range						
Output Voltage	+3.3 V	+5 V	+12 V	+12 V 2	-12 V	+5 Vsb	+5 Vsb
	10 A (0.1 A min.)	14 A (0.2 A min.)	14 A (0.6 A min.)		0.3 A	2.5 A	2.5 A
Efficiency	85%						
Temperature	Operating: 0°C ~ 50°C, Storage: -20°C ~ 80°C						
MTBF (hrs)	100,000						
Output Connector	20+4-pin ATX, 4-pin 12V CPU, 2 x HDD, 2 x SATA, 1 x Graphics card power						
Dimensions (mm)	150 x 81.5 x 40.5						

Dimensions (Unit: mm)

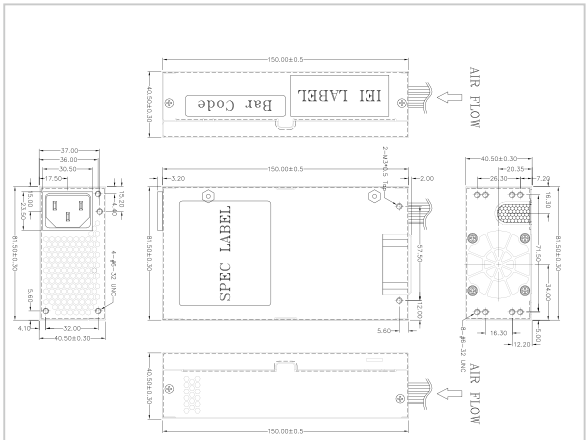

Ordering Information

Part No.	Description
ACE-A622C-R10	1U Flex ATX 220W Power Supply, 90~264VAC, ErP, CCL, RoHS

ACE-A618C

180 W 1U Type ATX Power Supply



Dimensions *(Unit: mm)*

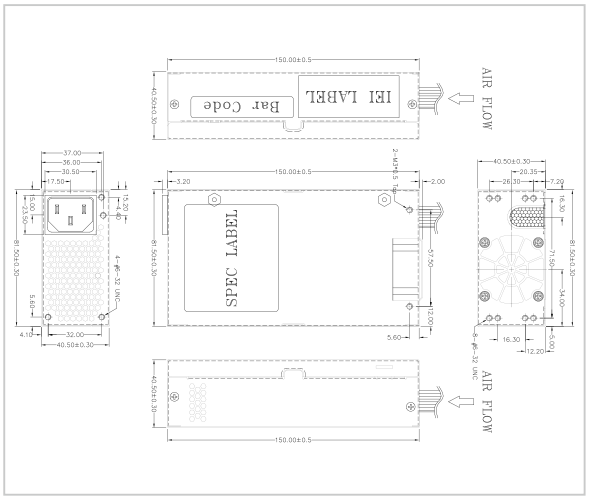

Specifications

Input Type	90~264 VAC Full Range				
Output Voltage	+3.3 V	+5 V	+12 V	-12 V	+5 Vsb
	10 A (0.1 A min.)	14 A (0.2 A min.)	10 A (0.6 A min.)	0.3 A	2.5 A
Efficiency	85%				
Temperature	Operating: 0°C ~ 50°C, Storage: -20°C ~ 80°C				
MTBF (hrs)	100,000				
Output Connector	20+4-pin ATX, 4-pin 12V CPU, 1 x FDD, 1 x HDD, 2 x SATA				
Dimensions (mm)	150 x 81.5 x 40.5				

Ordering Information

Part No.	Description
ACE-A618C-R10	1U Flex ATX 180W Power Supply, 90~264VAC, ErP, CCL, RoHS

ACE-A615C

150 W 1U Type ATX Power Supply



Dimensions *(Unit: mm)*

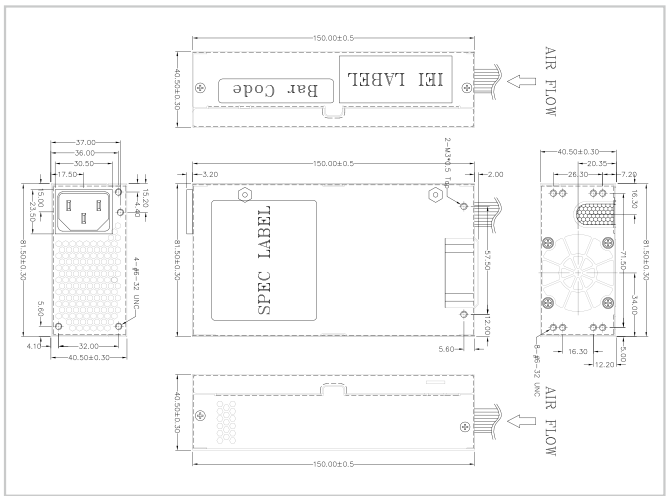

Specifications

Input Type	90~264 VAC Full Range				
Output Voltage	+3.3 V	+5 V	+12 V	-12 V	+5 Vsb
	10 A (0.1 A min.)	14 A (0.2 A min.)	10 A (0.6 A min.)	0.3 A	2.5 A
Efficiency	85%				
Temperature	Operating: 0°C ~ 50°C, Storage: -20°C ~ 80°C				
MTBF (hrs)	100,000				
Output Connector	20+4-pin ATX, 4-pin 12V CPU, 1 x FDD, 2 x HDD, 2 x SATA				
Dimensions (mm)	150 x 81.5 x 40.5				

Ordering Information

Part No.	Description
ACE-A615C-R10	1U Flex ATX 150W Power Supply, 90~264VAC, ErP, CCL, RoHS

1U AC Input AT Type

ACE-716AP

150 W 1U Type AT Power Supply

150W



PFC

Specifications

Input Type	85 ~ 265 VAC Full Range (ACE-716AP)			
Output Voltage	+5V	+12V	-5V	-12V
	18 A (1 A min.)	4 A	0.5 A	1 A
Efficiency	75%			
Temperature	Operating: -20°C ~ 70°C (50°C ~ 70°C derating curve) Storage: -20°C ~ 85°C			
MTBF (hrs)	149,000			
Output Connector	Optional cable			
Dimensions (mm)	198 x 97 x 40.5			

Dimensions (Unit: mm)

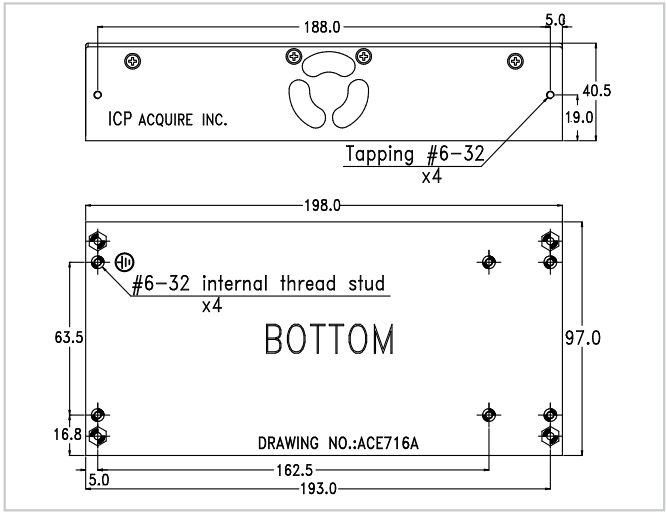

Ordering Information

Part No.	Description
ACE-716AP-RS	150W AC-DC AT Power Supply, with PFC

1U DC Input ATX Type

ACE-716C

150 W 24V DC Input AT Power Supply

150W



Specifications

Input Type	19 ~ 30 VDC				
Output Voltage	+5 V	+12 V	-5 V	-12 V	+24 V
	18 A (2 A min.)	4 A	0.5 A	1 A	
Efficiency	70%				
Temperature	Operating: -20°C ~ 70°C (50°C ~ 70°C derating curve) Storage: -20°C ~ 85°C				
MTBF (hrs)	210,000				
Output Connector	Optional cable				
Dimensions (mm)	198 x 97 x 40.5				

Dimensions (Unit: mm)

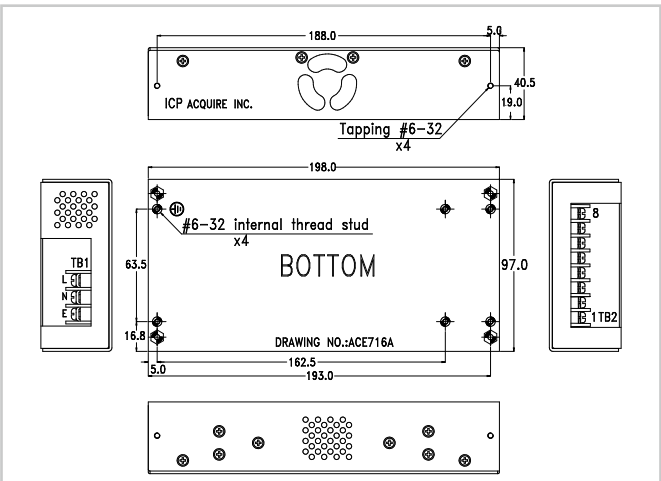

Output terminal block connectors

Pin 1, 2	Pin 3, 4	Pin 5	Pin 6	Pin 7	Pin 8
5 V	GND	-5 V	-12 V	GND	+12 V

Ordering Information

Part No.	Description
ACE-716C-RS	150 W 24 V DC Input AT Power Supply

ACE-A4520D

250 W 24V DC input 1U ATX Power Supply

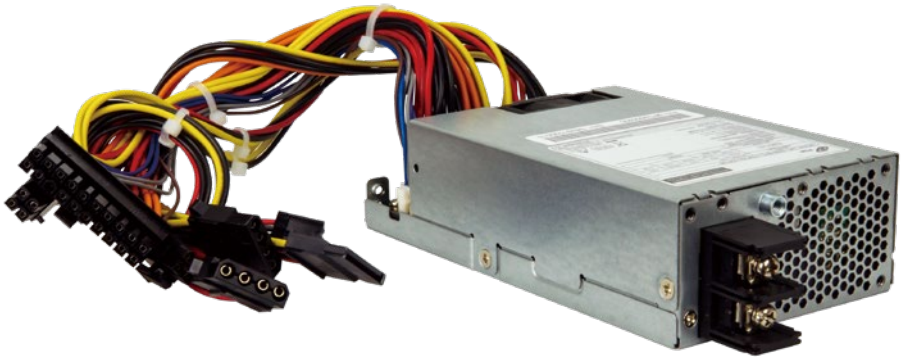

High power capacity 250W in 1U size!!

Meets ATX revision 2.0 with 20+4-pin ATX power and SATA

Specifications

Input	**Voltage**	18 ~ 36 VDC input		
	Input Current	15 A (RMS) @ -24 VDC		
	Inrush Current	18 A max. for -24 VDC		
Output	**Voltage**	**Min. Load**	**Max. Load**	**Ripple & Noise**
	+5 V	0 A	14 A	50 mV P-P
	+12 V	0.05 A	18 A	120 mV P-P
	-12 V	0 A	0.3 A	120 mV P-P
	+3.3 V	0 A	10 A	50 mV P-P
	+5 Vsb	0 A	2.5 A	50 mV P-P
	+3.3V, +5V, +12V total current not exceed 184W			
	Overvoltage Protection	+5 V output: 5.7 V ~ 6.5 V +12 V output: 13.3 V ~ 15.5 V +3.3 V output: 3.7 V ~ 4.5 V		
	Over Circuit Protection	+5 V output: 18 V ~ 22 V +12 V output: 20 V ~ 26 V +3.3 V output: 15 V ~ 20 V		
	Short Circuit Protection	+3.3 V, +5 V, +12 V shut down and latch off		
General Specifications	**Output Rise Time**	20 ms max.		
	Efficiency	80%		
	MTBF	100,000 hours on max. load at +25°C		
	Temperature	Operating: 0°C ~ 50°C Storage: -20°C ~ 80°C		
	Relative Humidity	5% ~ 95% RH non-condensing		
	Output Connector	20+4-pin ATX, 4-pin 12 V CPU, FDD, SATA, 2 x HDD		

Features

- High efficiency
- Low ripple & noise
- Output overvoltage protection
- Short circuit protection on all output
- 100% burn-in under high ambient temperature (50°C)
- Vacuum-impregnated transformer
- MTBF: 100K hours at 25°C
- 100% hi-pot tested
- Line input fuse protection

Dimensions *(Unit: mm)*

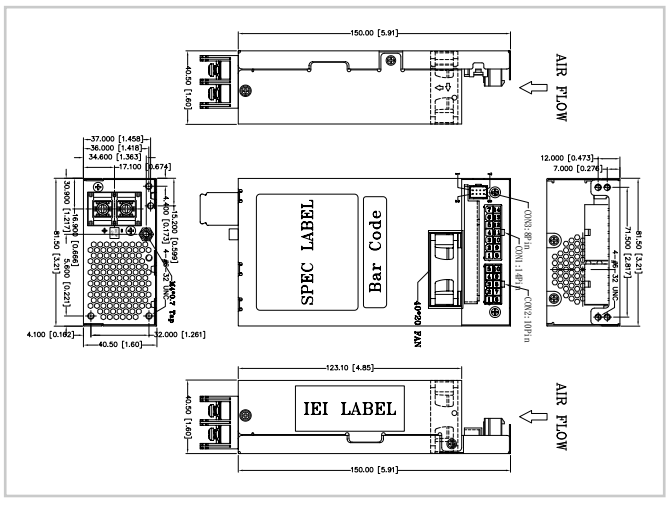

Ordering Information

Part No.	Description
ACE-A4520D-R10	250W 24 V DC Input 1U ATX Power Supply

PS/2 Selection Guide

Safety (ITE Standard) - CB IEC 60950, UL 60950, CSA C 22.2 No. 60950, TUV EN 60950
Safety (Medical Standard) - CB IEC 60601, UL 60601, CSA C 22.2 No. 60601, TUV EN 60601
EMI - Meets EN 55022, FCC Part 15, CISPR 22
Meets EN 61000-3-2, EN 61000-3-3 (PFC function)
EMS - Meets EN 55024, EN 61000-4-2/3/4/5/6/8/11

** For detailed specs, please refer to official certification*

AC Input

Product	Model No.	Watt AT/ATX PFC	Input Range	Output Current Range						Efficiency	ErP	Operating Temperature	Safety
			Voltage	+3.3 V	+5 V	+12 V	-5 V	-12 V	+5 Vsb				
	**ACE-A160B**	600W ATX PFC	90~264 VAC	25 A (0 A)	25 A (0.2 A)	V1: 16 A (0.05 A) V2: 16 A (0 A) V3: 16 A (0 A) V4: 16 A (0 A)	0.5 A (0 A)	0.5 A	4 A	80 PLUS BRONZE 82%	v	0°C ~ 50°C	CB / UL / TUV CCC / CE / FCC
	*Medical* **ACE-4840APM**	400W ATX PFC	90 ~ 265 VAC	30 A (0.5 A min.)	30 A (0.3 A min.)	V1: 17 A (1 A min.) V2: 17 A (1 A min.)	0.3 A	0.8 A	2 A	68%		0°C ~ 50°C	CB / UL CCC / VDE
	**ACE-A140B**	400W ATX PFC	90 ~ 264 VAC	21 A (0 A)	16 A (0.2 A)	V1: 17 A (0.05 A) V2: 17 A (0 A)	0.1 A (0 A)	0.5 A	3 A	80 PLUS GOLD 87%	v	-5°C ~ 50°C	CB / UL / TUV CCC / CE / FCC
	**ACE-A140B-S**	400W ATX PFC	90 ~ 264 VAC	21 A (0 A)	16 A (0.2 A)	V1: 17 A (0.05 A) V2: 17 A (0 A)	0.1 A (0 A)	0.5 A	3 A	80 PLUS GOLD 87%	v	-5°C ~ 50°C	CB / UL / TUV CCC / CE / FCC
	**ACE-A130C**	300W ATX PFC	90 ~ 264 VAC	19 A (0 A)	16 A (0.2 A)	V1: 17 A (0.05 A) V2: 17 A (0 A)	0.1 A (0 A)	0.5 A (0 A)	3 A (0 A)	80 PLUS GOLD 87%	v	0°C ~ 50°C	CB / UL / TUV CCC / CE / FCC
	**ACE-A130C-S**	300W ATX PFC	90 ~ 264 VAC	19 A (0 A)	16 A (0.2 A)	V1: 17 A (0.05 A) V2: 17 A (0 A)	0.1 A (0 A)	0.5 A (0 A)	3 A (0 A)	80 PLUS GOLD 87%	v	0°C ~ 50°C	CB / UL / TUV CCC / CE / FCC
	**ACE-935AL**	300W AT -	85 ~ 140 VAC 170 ~ 270 VAC		40 A (3 A min.)	8 A (0.1 A min.)	0.3 A	0.7 A		68%		0°C ~ 50°C	UL / CE

PS/2 AC Input ATX Type

ACE-A160B

600W PS/2 ATX Power Supply with ErP

600W

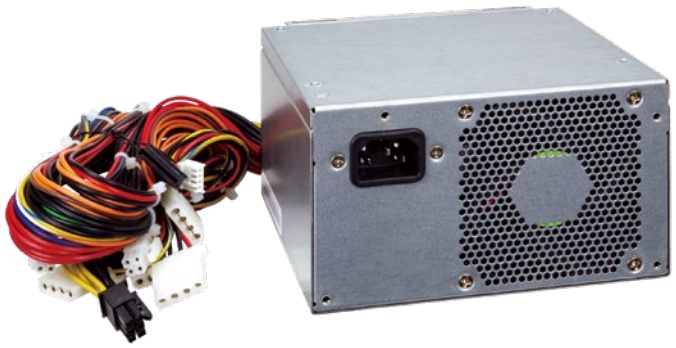

80 PLUS BRONZE

PFC

ErP 5Vsb < 0.5W Input

Specifications

Input	**Voltage**	90~265 VAC Full Range		
	Frequency	47 Hz ~ 63 Hz		
	Input Current	10A (RMS)@115VAC, 5A (RMS)@230VAC		
	Inrush Current	40A max. for 115VAC, 80A max. for 230VAC		
Output	**Voltage**	**Min. load**	**Max. load**	**Ripple & Noise**
	+3.3V	0 A	25 A	50mV
	+5V	0.2 A	25 A	50mV
	+12V1	0.05 A	16 A	120mV
	+12V2	0 A	16 A	120mV
	+12V3	0 A	16 A	120mV
	+12V4	0 A	16 A	120mV
	-12V	0 A	0.5 A	120mV
	+5VSB	0 A	4.0 A	50mV
	-5V	0A	0.5A	50mV
	Maximum continuous combined load on +3.3VDC and +5VDC outputs shall not exceed 150W.			
	Maximum continuous total DC output power should not exceed 600W			
	Over Voltage Protection	5V: 5.7V-6.5V 12V1 ~ 12V4: 13.3V-16.7V 3.3V: 3.9V-4.5V		
	Short Circuit Protection	3.3V, 5V, +12V1, +12V2, +12V3, +12V4, -12V, -5V shutdown and latch off		
General Specifications	**Watt**	600W		
	PFC	Active		
	Hold-up Time	16 ms min.		
	Efficiency	82%		
	MTBF	100,000 hours		
	Temperature	Operating: 0°C ~ 50°C, Storage: -20°C ~ 80°C		
	Dimensions (mm)	140 x 150 x 86		
	Output Connector	1 x 20+4-pin ATX, 1 x 4-pin 12V CPU, 9 x HDD/ CDROM, 1 x Graphics card power, 2 x FDD, 2 x SATA		

Ordering Information

Part No.	Description
ACE-A160B-R10	600W PS/2 ATX Power Supply with ERP, RoHS

Dimensions *(Unit: mm)*

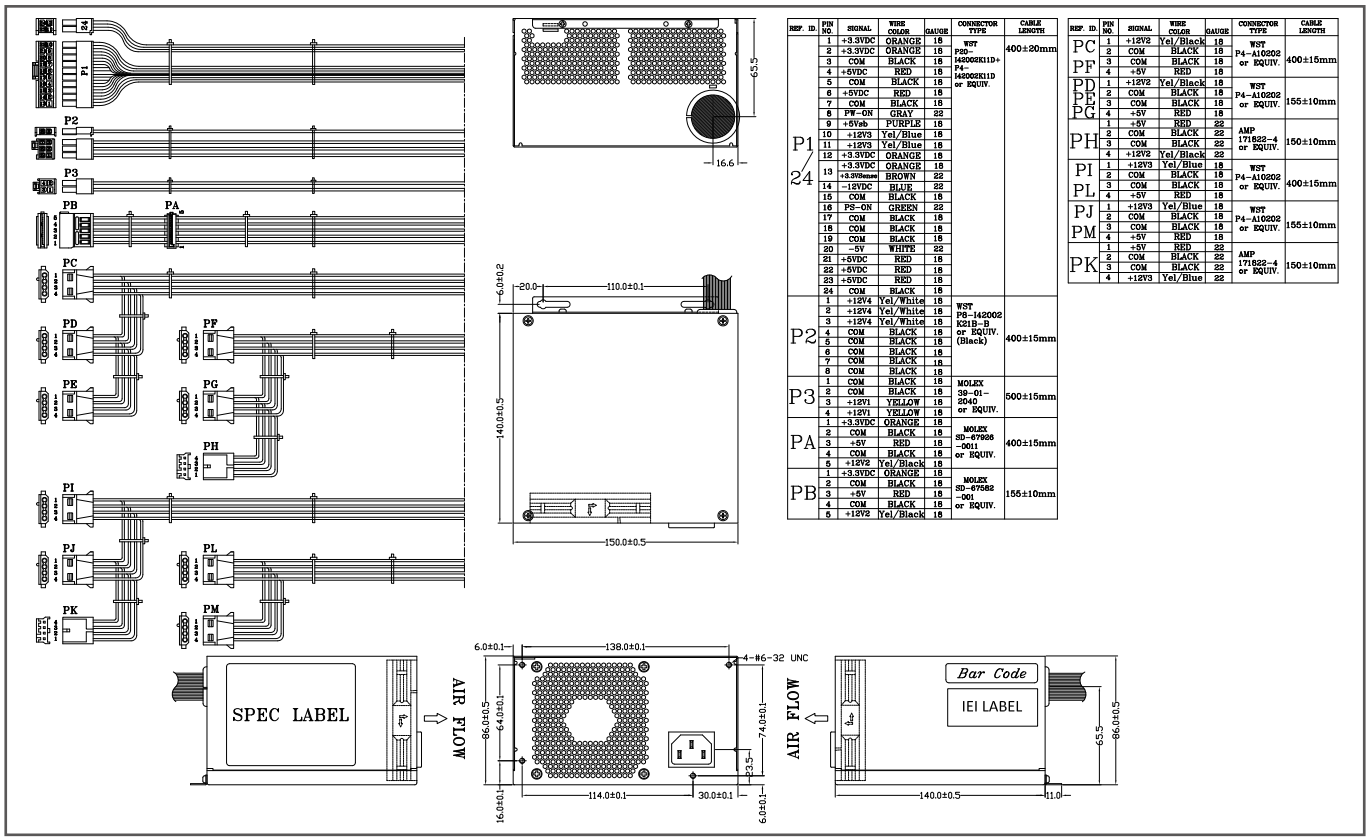

REF. ID	PIN NO.	SIGNAL	WIRE COLOR	GAUGE	CONNECTOR TYPE	CABLE LENGTH
P1 / 24	1	+3.3VDC	ORANGE	18	WST P20-142002K11D+ P4-142002K11D or EQUIV.	400±20mm
	2	+3.3VDC	ORANGE	18		
	3	COM	BLACK	18		
	4	+5VDC	RED	18		
	5	COM	BLACK	18		
	6	+5VDC	RED	18		
	7	COM	BLACK	18		
	8	PW-OK	GRAY	22		
	9	+5Vsb	PURPLE	18		
	10	+12V3	Yel/Blue	18		
	11	+12V3	Yel/Blue	18		
	12	+3.3VDC	ORANGE	18		
	13	+3.3VDC / +3.3VSense	ORANGE / BROWN	18 / 22		
	14	-12VDC	BLUE	22		
	15	COM	BLACK	18		
	16	PS-ON	GREEN	22		
	17	COM	BLACK	18		
	18	COM	BLACK	18		
	19	COM	BLACK	18		
	20	-5V	WHITE	22		
	21	+5VDC	RED	18		
	22	+5VDC	RED	18		
	23	+5VDC	RED	18		
	24	COM	BLACK	18		
P2	1	+12V4	Yel/White	18	WST P8-142002 K21B-B or EQUIV. (Black)	400±15mm
	2	+12V4	Yel/White	18		
	3	+12V4	Yel/White	18		
	4	COM	BLACK	18		
	5	COM	BLACK	18		
	6	COM	BLACK	18		
	7	COM	BLACK	18		
	8	COM	BLACK	18		
P3	1	COM	BLACK	18	MOLEX 39-01-2040 or EQUIV.	500±15mm
	2	COM	BLACK	18		
	3	+12V1	YELLOW	18		
	4	+12V1	YELLOW	18		
PA	1	+3.3VDC	ORANGE	18	MOLEX SD-87926 -0011 or EQUIV.	400±15mm
	2	COM	BLACK	18		
	3	+5V	RED	18		
	4	COM	BLACK	18		
	5	+12V2	Yel/Black	18		
PB	1	+3.3VDC	ORANGE	18	MOLEX SD-87582 -001 or EQUIV.	155±10mm
	2	COM	BLACK	18		
	3	+5V	RED	18		
	4	COM	BLACK	18		
	5	+12V2	Yel/Black	18		

REF. ID	PIN NO.	SIGNAL	WIRE COLOR	GAUGE	CONNECTOR TYPE	CABLE LENGTH
PC	1	+12V2	Yel/Black	18	WST P4-A10202 or EQUIV.	400±15mm
PF	2	COM	BLACK	18		
	3	COM	BLACK	18		
	4	+5V	RED	18		
PD	1	+12V2	Yel/Black	18	WST P4-A10202 or EQUIV.	155±10mm
PE	2	COM	BLACK	18		
PG	3	COM	BLACK	18		
	4	+5V	RED	18		
PH	1	+5V	RED	22	AMP 171822-4 or EQUIV.	150±10mm
	2	COM	BLACK	22		
	3	COM	BLACK	22		
	4	+12V2	Yel/Black	22		
PI	1	+12V3	Yel/Blue	18	WST P4-A10202 or EQUIV.	400±15mm
PL	2	COM	BLACK	18		
	3	COM	BLACK	18		
	4	+5V	RED	18		
PJ	1	+12V3	Yel/Blue	18	WST P4-A10202 or EQUIV.	155±10mm
PM	2	COM	BLACK	18		
	3	COM	BLACK	18		
	4	+5V	RED	18		
PK	1	+5V	RED	22	AMP 171822-4 or EQUIV.	150±10mm
	2	COM	BLACK	22		
	3	COM	BLACK	22		
	4	+12V3	Yel/Blue	22		

ACE-4840APM

400 W PS/2 Medical Type ATX Power Supply

400W

Medical



New Version 20+4 Pins Power Supply

PFC

Features

1. Internal 8 cm fan
2. Meets medical safety standards
3. Line input fuse protection
4. Output overvoltage protection
5. Short circuit protection on all outputs
6. Total +12 V output up to 34 A

PICMG 1.0 Form Factor Backplane

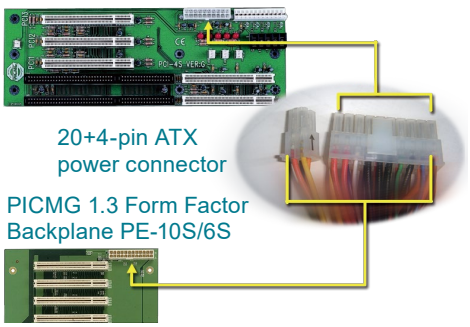

20+4-pin ATX power connector

PICMG 1.3 Form Factor Backplane PE-10S/6S

Specifications

Input Voltage	90 ~ 265 VAC Full Range			
Input Frequency	47 Hz ~ 63 Hz			
Input Current	8 A (RMS) for 115 VAC, 4 A (RMS) for 230 VAC			
Inrush Current	60 A max. for 115 VAC, 100 A max. for 230 VAC			
Output Voltage	**Voltage**	**Min. load**	**Max. load**	**Ripple & Noise**
	+3.3 V	0.5 A min	30 A	50 mV
	+5 V	0.3 A min	30 A	50 mV
	+12 V1	1 A min	17 A	120 mV
	+12 V2	1 A min	17 A	120 mV
	-5 V		0.3 A	100 mV
	-12 V		0.8 A	120 mV
	+5 V sb		2 A	50 mV
	+3.3 V & +5 V total output not exceed 180 W +3.3 V & +5 V & +12 V total output not exceed 380 W			
Overvoltage Protection	+5 V +3.3 V +12 V	5.7 V ~ 6.5 V 3.7 V ~ 4.5 V 13.3 V ~ 15.6 V		
Hold Up Time	20 ms min.			
MTBF	100,000 hours			
Operating Temperature	0°C ~ 50°C			
Storage Temperature	-20°C ~ 80°C			
Efficiency	68%			
Dimensions (mm)	140 x 150 x 86			
Output Connector	1 x 20+4-pin ATX, 1 x 4-pin 12V CPU, 5 x HDD/CDROM, 2 x FDD, 2 x SATA, 1 x Extra +5V (P10)			

Ordering Information

Part No.	Description
ACE-4840APM-RS	400 W AC-DC PS/2 ATX Power Supply, meets medical standard, with PFC

■ Power Connector +12 V

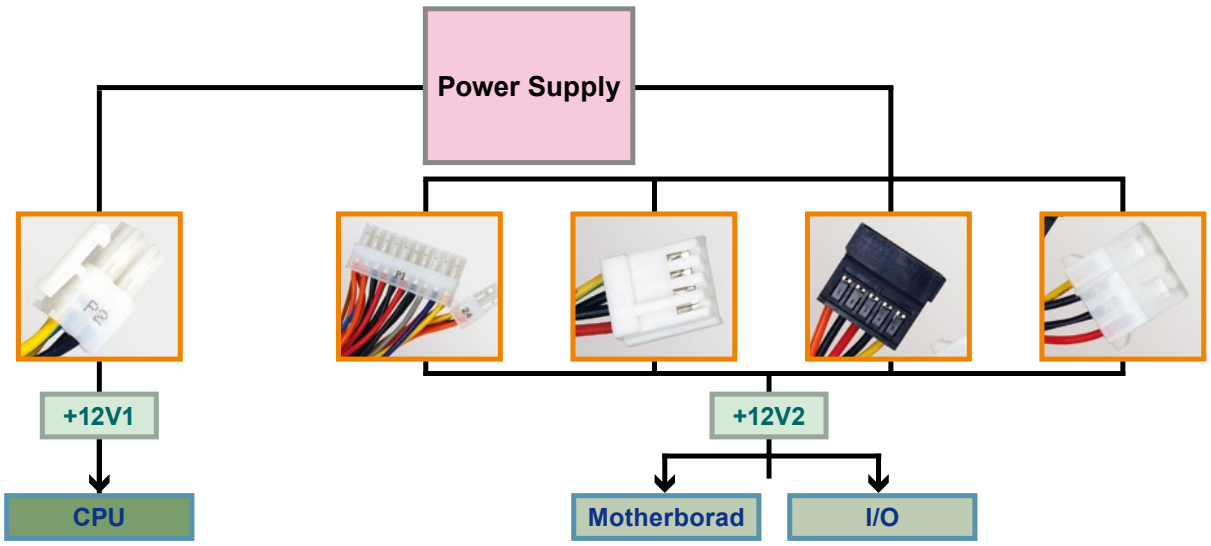

ACE-A140B

400 W PS/2 ATX Power Supply with ErP

400W

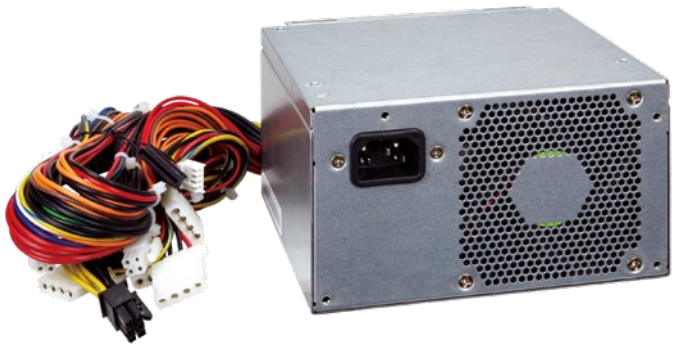

Specifications

Input	**Voltage**	90~264 VAC Full Range		
	Frequency	47 Hz ~ 63 Hz		
	Input Current	5A (RMS)@115VAC, 2.5A (RMS)@230VAC		
	Inrush Current	80A max. for 115VAC 160A max. for 230VAC		
Output	**Voltage**	**Min. load**	**Max. load**	**Ripple & Noise**
	+3.3V	0 A	21 A	50mV
	+5V	0.2 A	16 A	50mV
	+12V1	0.05A	17 A	120mV
	+12V2	0 A	17 A	120mV
	-12V	0 A	0.5 A	120mV
	-5V	0 A	0.1 A	100mV
	+5VSB	0 A	3 A	50mV
	The +3.3V and +5V total output shall not exceed 103W.			
	Total output for this power supply is 400 watts.			
	Over Voltage Protection	+3.3V: 3.76V-4.3V +5V: 5.74V-7.0V +12V1 and +12V2: 13.4V-15.6V		
	Short Circuit Protection	+3.3V, +5V, +12V or -12V shutdown and latch off		
General Specifications	**Watt**	400W		
	PFC	Active		
	Hold-up Time	16 ms min.		
	Efficiency	87%		
	MTBF	100000 hours		
	Temperature	Operating: 0°C ~ 50°C Storage: -20°C ~ 80°C		
	Dimensions (mm)	140 x 150 x 86		
	Output Connector	1 x 20+4-PIN ATX, 1 x 4-pin 12V CPU, 8 x HDD/CDROM, 1 x Graphics card power, 2 x FDD, 2 x SATA		

Ordering Information

Part No.	Description
ACE-A140B-R10	400W AC-DC PS/2 ATX Power Supply with ErP, meets 80 PLUS (Bronze)

Dimensions (Unit: mm)

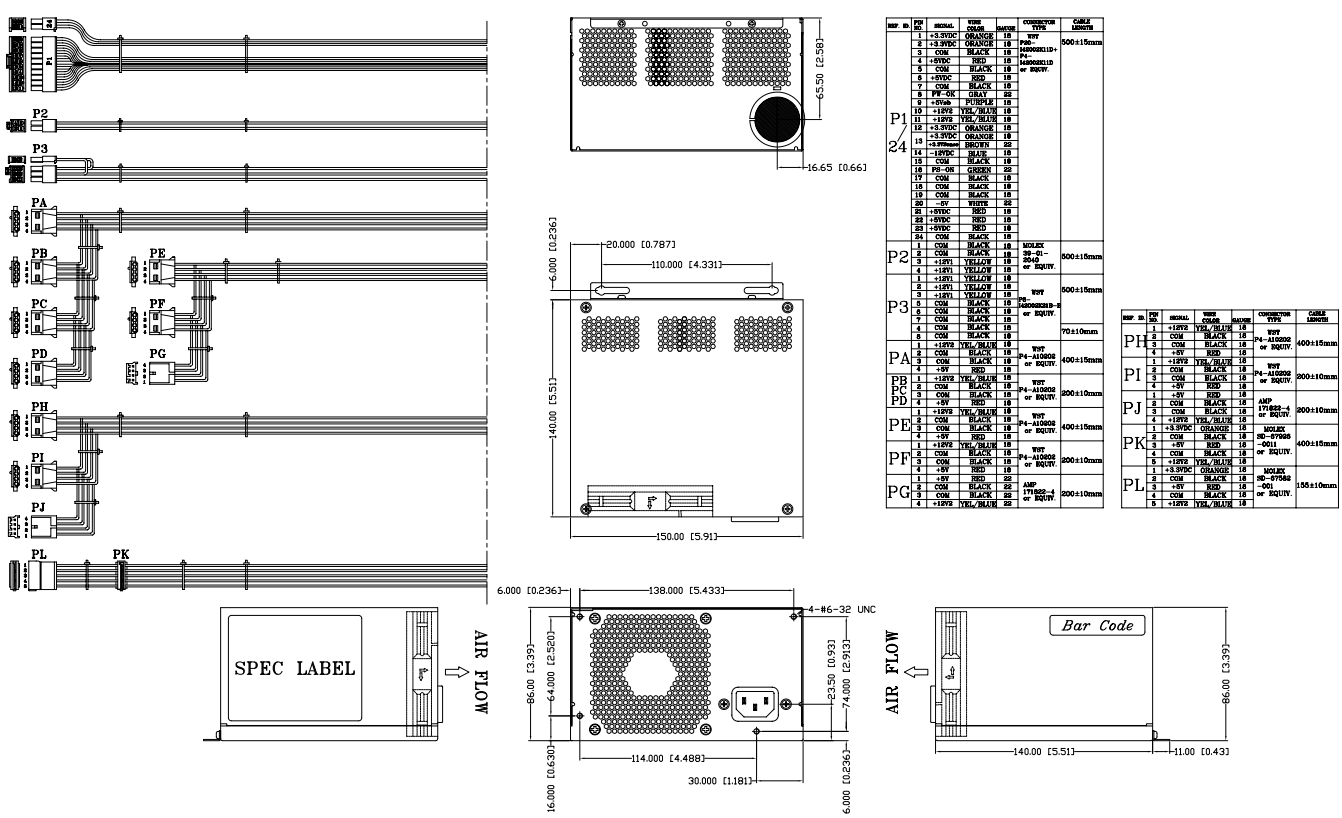

ACE-A140B-S

400 W PS/2 ATX Power Supply with ErP

400W



Specifications

Input	**Voltage**	90~264 VAC Full Range		
	Frequency	47 Hz ~ 63 Hz		
	Input Current	5A (RMS)@115VAC, 2.5A (RMS)@230VAC		
	Inrush Current	80A max. for 115VAC 160A max. for 230VAC		
Output	**Voltage**	**Min. load**	**Max. load**	**Ripple & Noise**
	+3.3V	0 A	21 A	50mV
	+5V	0.2 A	16 A	50mV
	+12V1	0.05 A	16 A	120mV
	+12V2	0 A	17 A	120mV
	-12V	0 A	17 A	120mV
	-5V	0 A	0.1 A	100mV
	+5VSB	0 A	3 A	50mV
	The +3.3V and +5V total output shall not exceed 103W			
	Total output for this power supply is 400 watts.			
	Over Voltage Protection	+3.3V: 3.76V-4.3V +5V: 5.74V-7.0V +12V1 and +12V2: 13.4V-15.6V		
	Short Circuit Protection	+3.3V, +5V, +12V or -12V shutdown and latch off		
General Specifications	**Watt**	400W		
	PFC	Active		
	Hold-up Time	16ms min.		
	Efficiency	87%		
	MTBF	100000 hours		
	Temperature	Operating: 0°C ~ 50°C Storage: -20°C ~ 80°C		
	Dimensions (mm)	140 x 150 x 86		
	Output Connector	1 x 20+4-PIN ATX, 1 x 4-pin 12V CPU, 8 x HDD/CDROM,1 x Graphics card power, 2 x FDD, 2 x SATA		

Ordering Information

Part No.	Description
ACE-A140B-S-R10	400W PS/2 ATX Power Supply with ERP & on/off switch, meets 80 plus(Gold), RoHS

Dimensions *(Unit: mm)*

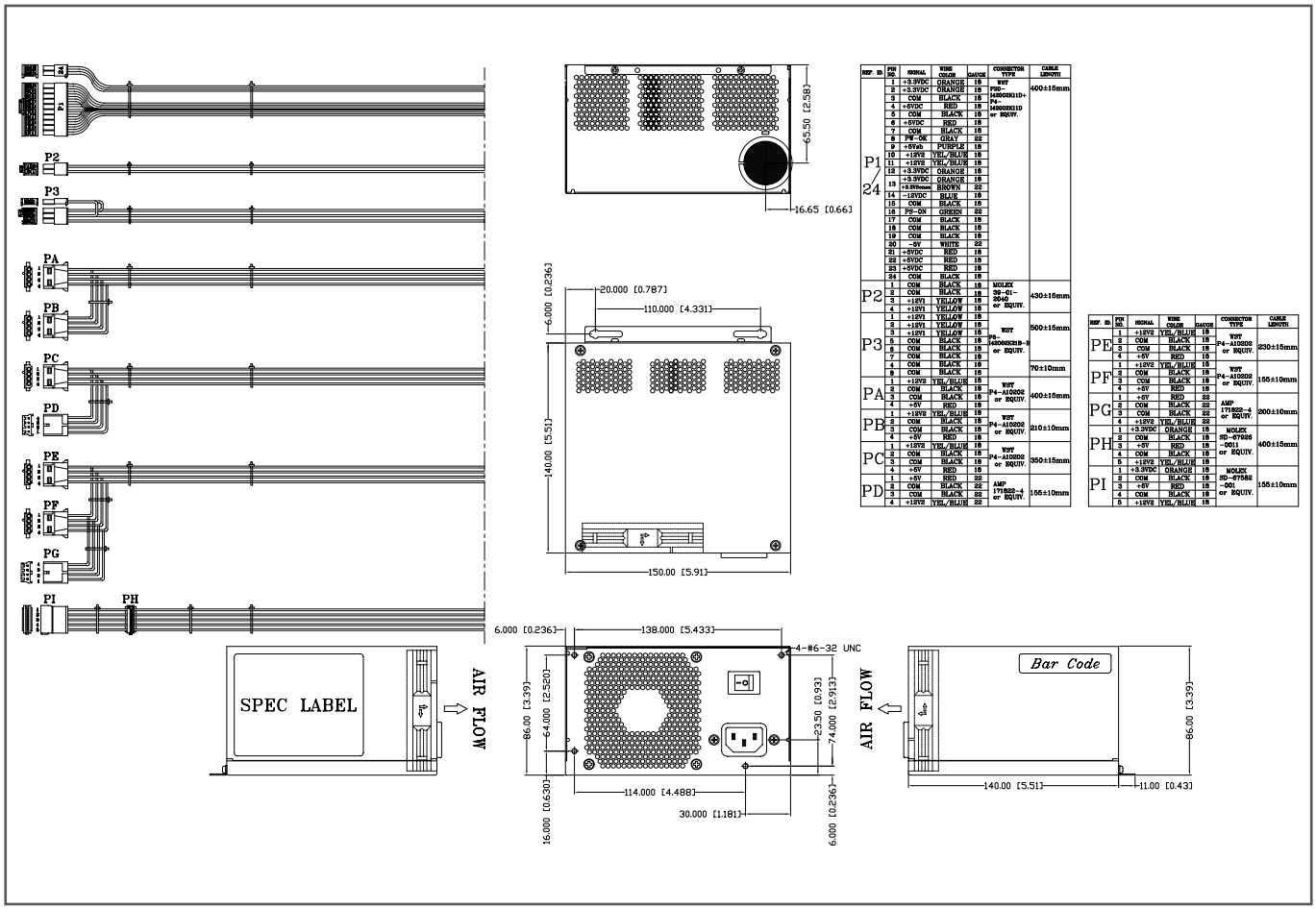

ACE-A130C

300 W PS/2 ATX Power Supply with ErP

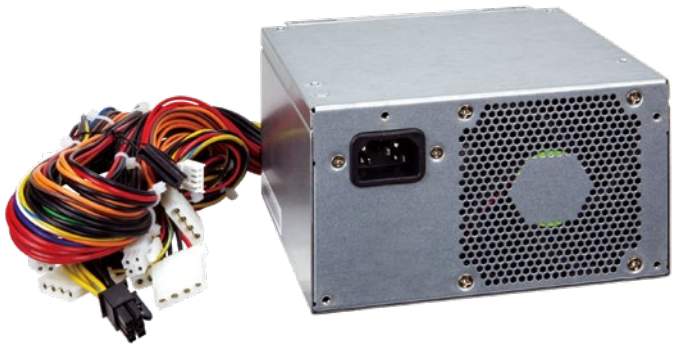

Specifications

Input	**Voltage**	90~264 VAC Full Range		
	Frequency	47 Hz ~ 63 Hz		
	Input Current	4A (RMS)@115VAC, 2A (RMS)@230VAC		
	Inrush Current	80A max. for 115VAC, 160A max. for 230VAC		
Output	**Voltage**	**Min. load**	**Max. load**	**Ripple & Noise**
	+3.3V	0 A	19 A	50mV
	+5V	0.2 A	16 A	50mV
	+12V1	0.05 A	17 A	120mV
	+12V2	0 A	17 A	120mV
	-12V	0 A	0.5A	120mV
	+5VSB	0 A	3 A	50mV
	-5V	0 A	0.1 A	100mV
	Total combined output of +3.3V and +5V is ≤103W			
	Total output for this power supply is 300 watts			
	Over Voltage Protection	+3.3V: 3.76V-4.3V +5V: 5.74V-7.0V +12V1 and +12V2: 13.4V-15.6V		
	Short Circuit Protection	+3.3V, +5V, +12V shutdown and latch off		
General Specifications	**Watt**	300W		
	PFC	Active		
	Hold-up Time	16 ms min.		
	Efficiency	87%		
	MTBF	100,000 hours		
	Temperature	Operating: 0°C ~ 50°C Storage: -40°C ~ 70°C		
	Dimensions (mm)	140 x 150 x 86		
	Output Conntrctor	1 x 20+4-PIN ATX, 1 x 4-pin 12V CPU, 7 x HDD/ CDROM, 1 x Graphics card power, 1 x FDD, 2 x SATA		

Ordering Information

Part No.	Description
ACE-A130C-R10	300W PS/2 ATX Power Supply with ERP&PFC, meets 80 plus (Gold), RoHS

Dimensions *(Unit: mm)*

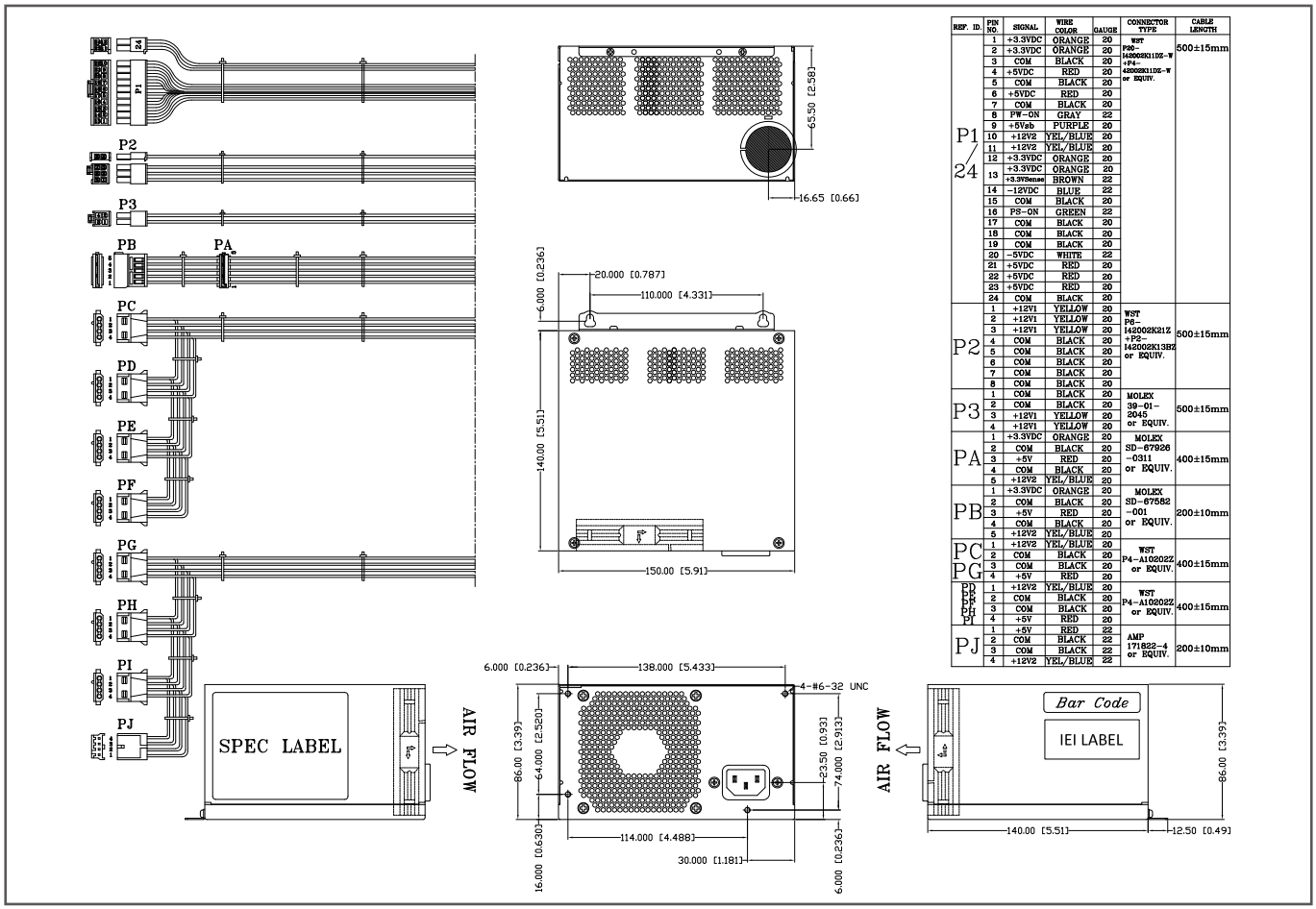

REF. ID.	PIN NO.	SIGNAL	WIRE COLOR	GAUGE	CONNECTOR TYPE	CABLE LENGTH
P1 / 24	1	+3.3VDC	ORANGE	20	WST P20-1420G2K11D2-W +P4-4202G2K11D2-W or EQUIV.	500±15mm
	2	+3.3VDC	ORANGE	20		
	3	COM	BLACK	20		
	4	+5VDC	RED	20		
	5	COM	BLACK	20		
	6	+5VDC	RED	20		
	7	COM	BLACK	20		
	8	PW-ON	GRAY	22		
	9	+5Vsb	PURPLE	20		
	10	+12V2	YEL/BLUE	20		
	11	+12V2	YEL/BLUE	20		
	12	+3.3VDC	ORANGE	20		
	13	+3.3VDC	ORANGE	20		
		+3.3VSense	BROWN	22		
	14	-12VDC	BLUE	22		
	15	COM	BLACK	20		
	16	PS-ON	GREEN	22		
	17	COM	BLACK	20		
	18	COM	BLACK	20		
	19	COM	BLACK	20		
	20	-5VDC	WHITE	22		
	21	+5VDC	RED	20		
	22	+5VDC	RED	20		
	23	+5VDC	RED	20		
	24	COM	BLACK	20		
P2	1	+12V1	YELLOW	20	WST P2-1420G2K21Z +P2-1420G2K13B2 or EQUIV.	500±15mm
	2	+12V1	YELLOW	20		
	3	+12V1	YELLOW	20		
	4	COM	BLACK	20		
	5	COM	BLACK	20		
	6	COM	BLACK	20		
	7	COM	BLACK	20		
	8	COM	BLACK	20		
P3	1	COM	BLACK	20	MOLEX 39-01-2045 or EQUIV.	500±15mm
	2	COM	BLACK	20		
	3	+12V1	YELLOW	20		
	4	+12V1	YELLOW	20		
PA	1	+3.3VDC	ORANGE	20	MOLEX SD-67926-0311 or EQUIV.	400±15mm
	2	COM	BLACK	20		
	3	+5V	RED	20		
	4	COM	BLACK	20		
PB	5	+12V2	YEL/BLUE	20	MOLEX SD-67582-001 or EQUIV.	200±10mm
	1	+3.3VDC	ORANGE	20		
	2	COM	BLACK	20		
	3	+5V	RED	20		
	4	COM	BLACK	20		
PC / PG	5	+12V2	YEL/BLUE	20	WST P4-A102G2Z or EQUIV.	400±15mm
	1	+12V2	YEL/BLUE	20		
	2	COM	BLACK	20		
	3	COM	BLACK	20		
	4	+5V	RED	20		
PD / PE / PH / PI	1	+12V2	YEL/BLUE	20	WST P4-A102G2Z or EQUIV.	400±15mm
	2	COM	BLACK	20		
	3	COM	BLACK	20		
	4	+5V	RED	20		
PJ	1	+5V	RED	22	AMP 171822-4 or EQUIV.	200±10mm
	2	COM	BLACK	22		
	3	COM	BLACK	22		
	4	+12V2	YEL/BLUE	22		

ACE-A130C-S

300 W PS/2 ATX Power Supply with ErP



Specifications

Input	**Voltage**	90~264 VAC Full Range		
	Frequency	47 Hz ~ 63 Hz		
	Input Current	4A (RMS)@115VAC, 2A (RMS)@230VAC		
	Inrush Current	80A max. for 115VAC, 160A max. for 230VAC		
Output	**Voltage**	**Min. load**	**Max. load**	**Ripple & Noise**
	+3.3V	0 A	19 A	50mV
	+5V	0.2 A	16 A	50mV
	+12V1	0.05 A	17 A	120mV
	+12V2	0 A	17 A	120mV
	-12V	0 A	0.5A	120mV
	+5VSB	0 A	3 A	50mV
	-5V	0 A	0.1 A	100mV
	Total combined output of +3.3V and +5V is ≤103W			
	Total output for this power supply is 300 watts			
	Over Voltage Protection	+3.3V: 3.76V-4.3V +5V: 5.74V-7.0V +12V1 and +12V2: 13.4V-15.6V		
	Short Circuit Protection	+3.3V, +5V, +12V shutdown and latch off		
General Specifications	**Watt**	300W		
	PFC	Active		
	Hold-up Time	16 ms min.		
	Efficiency	87%		
	MTBF	100,000 hours		
	Temperature	Operating: 0°C ~ 50°C Storage: -40°C ~ 70°C		
	Dimensions (mm)	140 x 150 x 86		
	Output Conntrctor	1 x 20+4-PIN ATX, 1 x 4-pin 12V CPU, 7 x HDD/ CDROM, 1 x Graphics card power, 1 x FDD, 2 x SATA		

Ordering Information

Part No.	Description
ACE-A130C-S-R10	300W PS/2 ATX Power Supply with ERP/PFC & on/off switch, meets 80 plus (Gold), RoHS

Dimensions *(Unit: mm)*

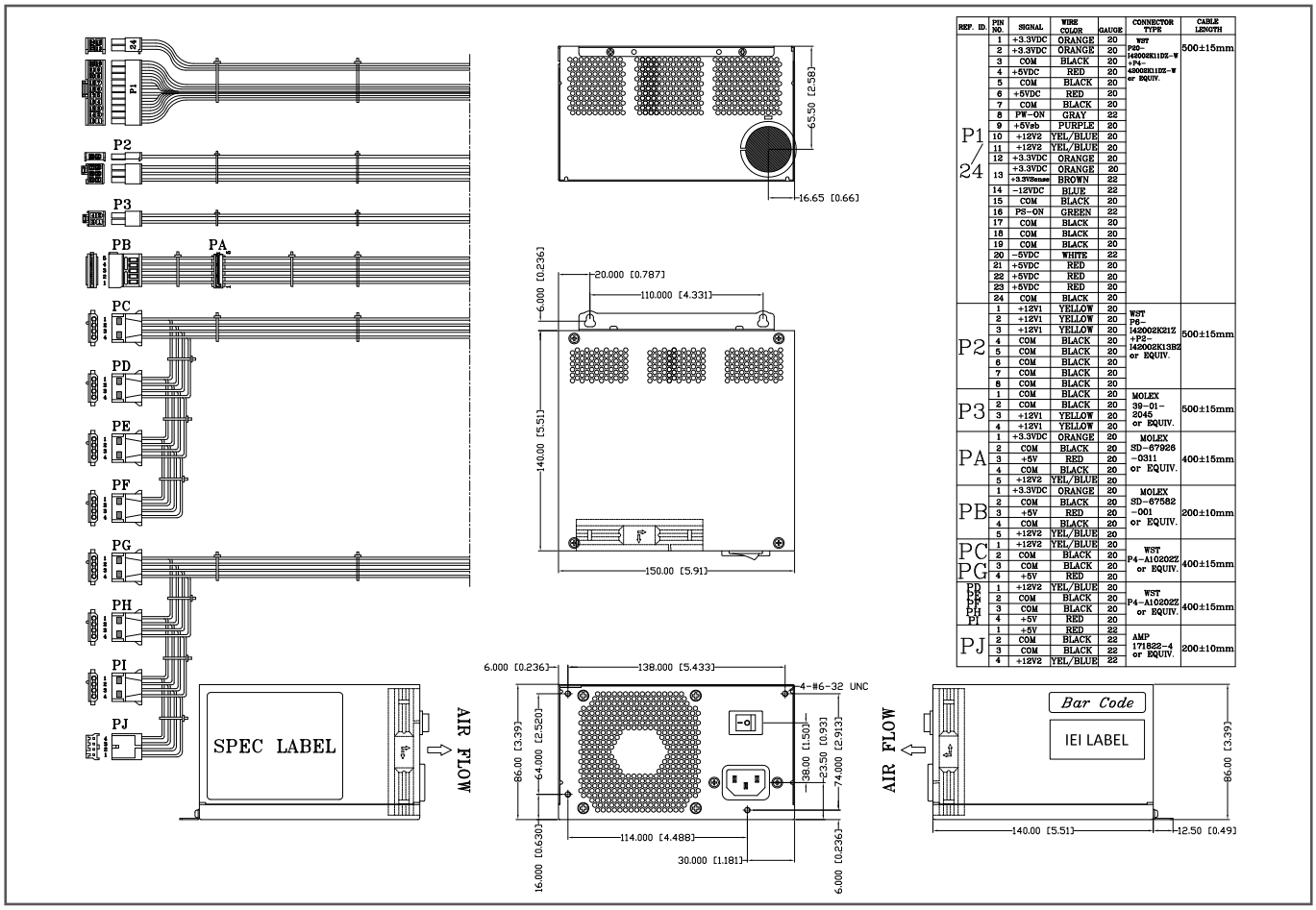

REF. ID	PIN NO.	SIGNAL	WIRE COLOR	GAUGE	CONNECTOR TYPE	CABLE LENGTH
P1/24	1	+3.3VDC	ORANGE	20	WST P80-14200SK11DZ-W +P4-42003K11DZ-W or EQUIV.	500±15mm
	2	+3.3VDC	ORANGE	20		
	3	COM	BLACK	20		
	4	+5VDC	RED	20		
	5	COM	BLACK	20		
	6	+5VDC	RED	20		
	7	COM	BLACK	20		
	8	PW-ON	GRAY	22		
	9	+5Vsb	PURPLE	20		
	10	+12V2	YEL/BLUE	20		
	11	+12V2	YEL/BLUE	20		
	12	+3.3VDC	ORANGE	20		
	13	+3.3VDC	ORANGE	20		
		+3.3V[Sense]	BROWN	22		
	14	-12VDC	BLUE	22		
	15	COM	BLACK	20		
	16	PS-ON	GREEN	22		
	17	COM	BLACK	20		
	18	COM	BLACK	20		
	19	COM	BLACK	20		
	20	-5VDC	WHITE	22		
	21	+5VDC	RED	20		
	22	+5VDC	RED	20		
	23	+5VDC	RED	20		
	24	COM	BLACK	20		
P2	1	+12V1	YELLOW	20	WST P8-142002K212 +P2-142002K13BZ or EQUIV.	500±15mm
	2	+12V1	YELLOW	20		
	3	+12V1	YELLOW	20		
	4	COM	BLACK	20		
	5	COM	BLACK	20		
	6	COM	BLACK	20		
	7	COM	BLACK	20		
	8	COM	BLACK	20		
P3	1	COM	BLACK	20	MOLEX 39-01-2046 or EQUIV.	500±15mm
	2	COM	BLACK	20		
	3	+12V1	YELLOW	20		
	4	+12V1	YELLOW	20		
PA	1	+3.3VDC	ORANGE	20	MOLEX SD-67926-0311 or EQUIV.	400±15mm
	2	COM	BLACK	20		
	3	+5V	RED	20		
	4	COM	BLACK	20		
	5	+12V2	YEL/BLUE	20		
PB	1	+3.3VDC	ORANGE	20	MOLEX SD-67582-001 or EQUIV.	200±10mm
	2	COM	BLACK	20		
	3	+5V	RED	20		
	4	COM	BLACK	20		
PC/PG	1	+12V2	YEL/BLUE	20	WST P4-A10202Z or EQUIV.	400±15mm
	2	COM	BLACK	20		
	3	COM	BLACK	20		
	4	+5V	RED	20		
PD/PE/PF/PI	1	+12V2	YEL/BLUE	20	WST P4-A10202Z or EQUIV.	400±15mm
	2	COM	BLACK	20		
	3	COM	BLACK	20		
	4	+5V	RED	20		
PJ	1	+5V	RED	22	AMP 171822-4 or EQUIV.	200±10mm
	2	COM	BLACK	22		
	3	COM	BLACK	22		
	4	+12V2	YEL/BLUE	22		

PS/2 AC Input AT Type

ACE-935AL

300 W PS/2 Type AT Power Supply, AC Select Swithch



Ordering Information

Part No.	Description
ACE-935AL-RS	300 W AC-DC PS/2 AT Power Supply, AC select switch

Specifications

Input Type	85 ~ 140 VAC, 170 ~ 270 VAC Auto Range					
Output Voltage	+3.3 V	+5 V	+12 V	-5 V	-12 V	+5 Vsb
		40 A (3A min.)	8 A (0.1A min.)	0.3 A	0.7 A	
Efficiency	68%					
Temperature	0°C ~ 50°C (Operating), -40°C ~ 75°C (Storage)					
MTBF (hrs)	100,000					
Output Connector	1 x P8+P9, 1 x Extra +5V (P10), 5 x HDD/CDROM, 2 x FDD					

Optional Power Supply Cables

AC Input Solution

20 cm AC input cable with I/O connector and fuse



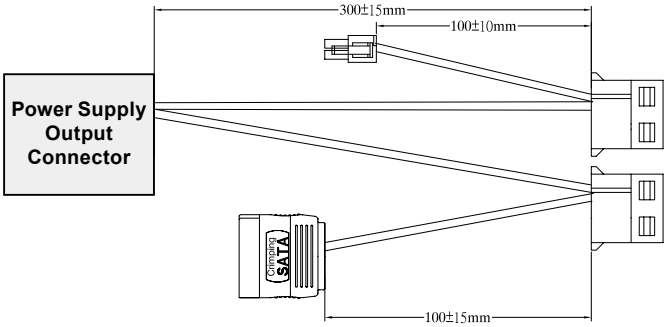

Embedded Solution

30 cm cable with SATA, 12 V and IDE device connectors

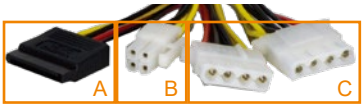

A. SATA device connector
B. 12V only connector
C. IDE device connector

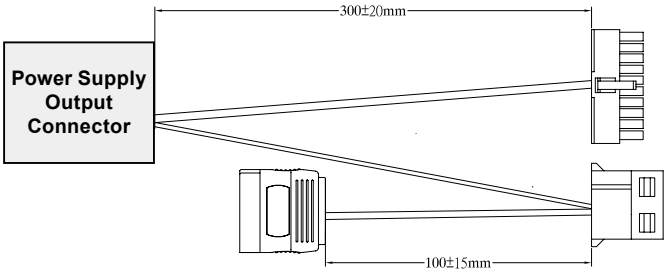

ATX Backplane Solution

30 cm cable with IDE, ATX and SATA device connectors

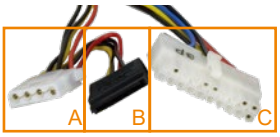

A. IDE device connector
B. SATA device connector
C. ATX backplane connector

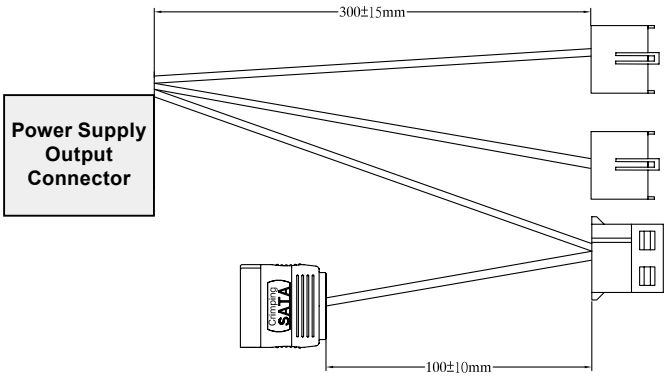

AT P8P9 Backplane Solution

30 cm cable with SATA, IDE and P8P9 AT device connectors

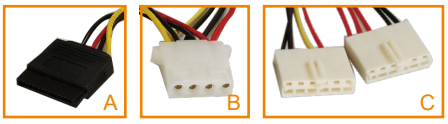

A. SATA device connector
B. IDE device connector
C. P8P9 AT connector

AT Backplane with ATX Power Supply Solution

15 cm cable with ATX, P8P9 and 5VSB connectors, and on/off switch

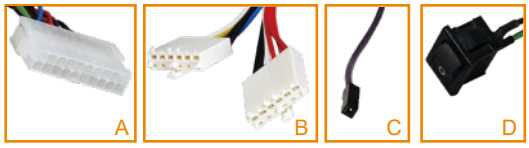

A. ATX backplane connector
B. P8P9 AT connector
C. 5Vsb connector
D. On/off switch

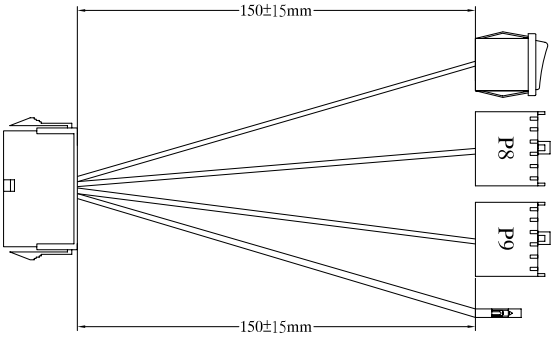

CB-716P8P9	CB-870P8P9	CB-890P8P9
	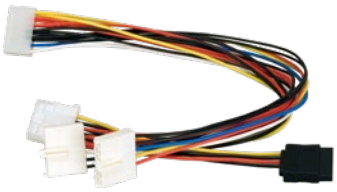	

Redundant Type Selection Guide

AC Input

Product	Model No.	Watt AT/ATX PFC	Input Range Voltage	Output Current Range +3.3 V	+5 V	+12 V	-5 V	-12 V	+5 Vsb	24V	Efficiency	Operating Temperature	Safety	Dimensions (mm)
	ACE-R4150AP	500W ATX PFC	90 ~ 264 VAC	20A (0A min.)	20A (0A min.)	40A (1A min.)	0.3 A (0A min.)	0.5 A (0A min.)	3 A		84%	0°C ~ 50°C	CB, UL, TUV, CCC, CE, FCC	150 × 84× 190
	ACE-R4130AP	300W ATX PFC	90 ~ 264 VAC	18 A (1 A min.)	25 A (3 A min.)	16 A (2 A min.)	0.5A	0.5 A	2 A (0.1 A min.)		65%	0°C ~ 50°C	CB, UL, TUV, CCC, CE, FCC	150 × 84 × 190

ACE-R4150AP

500 W ATX Mini Redundant Power Supply

500W

New



PFC

Specifications

Input	Voltage	90 ~ 264 VAC Full Range		
	Frequency	47 Hz ~ 63 Hz		
	Input Current	6 A (RMS) @115 VAC, 3 A (RMS) @230 VAC		
	Inrush Current	40 A max. for 115 VAC, 80 A max. for 230 VAC		
Output	Voltage	Min. load	Max. load	Ripple & Noise
	+3.3 V	0 A	20.0 A	50mVp-p
	+5 V	0 A	20.0 A	50mVp-p
	+12V	1 A	40.0 A	1200mVp-p
	-5 V	0 A	0.3 A	200mVp-p
	-12 V	0 A	0.5 A	200mVp-p
	+5 VSB	0 A	3 A	50mVp-p
General Specifications	Watt	500 W		
	Hold-up Time	16 ms min.		
	Efficiency	84% min		
	MTBF	100,000 hours		
	Temperature	Operating: 0ºC ~ 50ºC, Storage: -20ºC ~ 80ºC		
	Dimensions	150 × 84× 190 (mm)		
	Output Connector	1 x 24-pin ATX, 2 x 4+4-pin 12V CPU, 2 x HDD/ CDROM, 1 x FDD, 2 x SATA, 1 x T.T.L signal, 1 x LED power		

Dimensions *(Unit: mm)*

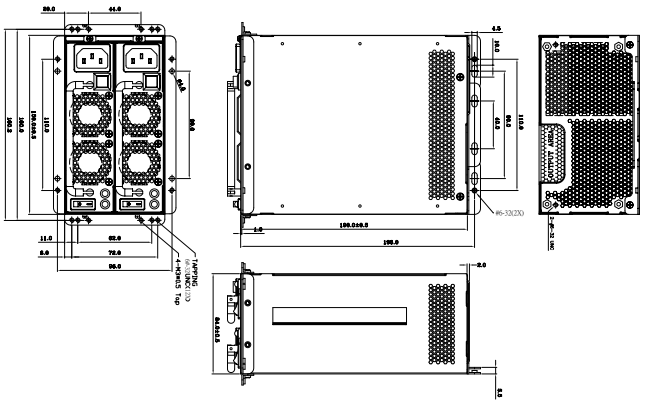

Ordering Information

Part No.	Description
ACE-A4150AP-R10	500 W Mini Redundant ATX Power Supply, with PFC
ACE-A4150AP1-R10	500 W AC-DC ATX Redundant Module, for ACE-R4130AP, with PFC

ACE-R4130AP

300 W ATX Mini Redundant Power Supply



Specifications

Input	Voltage	90 ~ 264 VAC Full Range		
	Frequency	47 Hz ~ 63 Hz		
	Input Current	6 A (RMS) @110 VAC, 3 A (RMS) @220 VAC		
	Inrush Current	60 A max. for 110 VAC, 80 A max. for 220 VAC		
Output	Voltage	Min. load	Max. load	Ripple & Noise
	+5 V	3 A	25 A	50mV P-P
	+12 V	2 A	16 A	120mV P-P
	-5 V	0 A	0.5 A	150mV P-P
	-12 V	0 A	0.5 A	150mV P-P
	+3.3 V	1 A	18 A	50mV P-P
	+5 Vsb	0.1 A	2 A	60mV P-P
	*Total current of +5 V and + 3.3 V not exceed 35 A *Total current of +5 V, +3.3 V and +12 V not exceed 282 W			
General Specifications	Watt	300 W		
	Hold-up Time	16 ms min.		
	Efficiency	65% min.		
	MTBF	160,000 hours		
	Temperature	Operating: 0ºC ~ 50ºC, Storage: -20ºC ~ 80ºC		
	Dimensions	185 x 150 x 86 (mm), 7.28 x 5.91 x 3.39 (inch)		
	Output Connector	1 x 20+4-pin ATX, 1 x 4-pin 12V CPU, 8 x HDD/ CDROM, 2 x FDD, 2 x SATA, 1 x Buzzer reset, 1 x T.T.L signal, 1 x LED power		

Dimensions *(Unit: mm)*

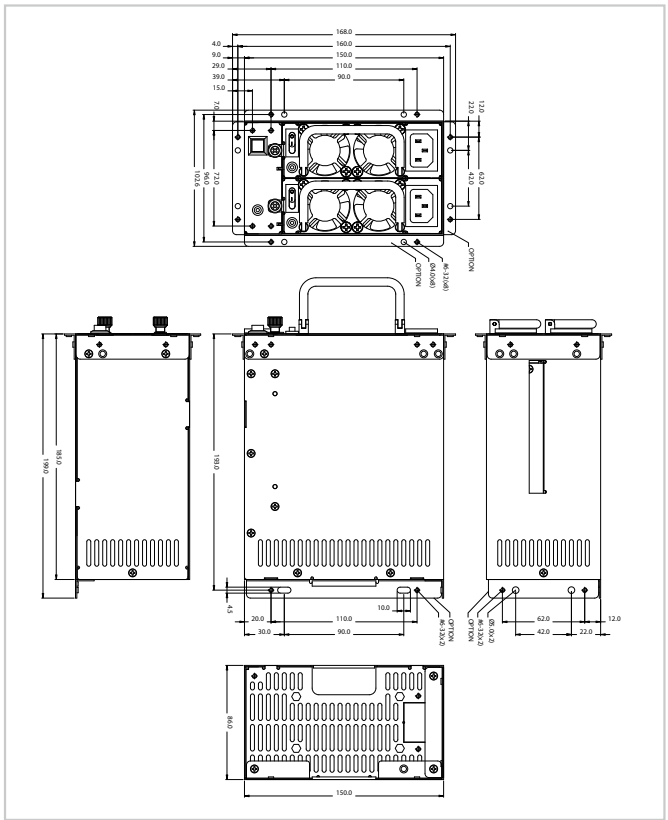

Ordering Information

Part No.	Description
ACE-R4130AP-RS	300 W Mini Redundant ATX Power Supply, with PFC
ACE-R4130AP1-RS	300 W AC-DC ATX Redundant Module, for ACE-R4130AP, with PFC

Adapter Type Selection Guide

Safety (ITE Stardard) - CB IEC 60950, UL 60950, CSA C 22.2 No. 60950, TUV EN 60950
Safety (Medical Stardard) - CB IEC 60601, UL 60601, CSA C 22.2 No. 60601, TUV EN 60601
EMI - Meets EN 55022, FCC Part 15, CISPR 22
Meets EN 61000-3-2, EN 61000-3-3 (PFC function)
EMS - Meets EN 55024, EN 61000-4-2/3/4/5/6/8/11

** For detailed specs, please refer to official certification*

AC Input

Product	Model No.	Watt	Input Range	Output Current Range			Plug Type	Efficiency	Operating Temperature	Safety	Dimensions (mm)
			Voltage	+5V	+12 V	+19 V					
	New **FSP150-ABAN3**	150W	90~264 VAC		10 A	7.89A		87%	0°C ~ 40°C	UL/TUV CCC/CE/ GS/PSE/KC/ BSMI	75.6 x 151.3 x 25.4
	**FSP120-AHAN3**	120W	90~264 VAC		10 A			87%	0°C ~ 40°C	UL/TUV CCC/CE/ GS/PSE/KC/ BSMI	75.6 x 151.3 x 25.4
	**FSP096-AHAN3**	96W	90~264 VAC		8 A			88%	0°C ~ 40°C	UL/TUV/CCC/ CE/GS/PSE/ KC/BSMI/ RCM	75.6 x 151.3 x 25.4
	**FSP090-DBBN3**	90W	90~264 VAC			4.74 A		88%	0°C ~ 40°C	UL/TUV/CCC/ CE/GS/PSE/ KC/BSMI/ RCM/PSE	51 x 129 x 30.9
	**FSP065-RBBN3**	65W	90~264 VAC			3.42 A		89.54%	0°C ~ 40°C	UL/TUV/CCC/ CE/BSMI/ PSE/PSB/GS/ EAC/NOM/ RCM/IRAM/ Nrcan/Nemko	46.3 x 108.3 x 30
	Medical **63040-010060-020**	60W	90~264 VAC		5V			85%	0°C ~ 60°C	CB/UL/ TUV/CCC/ BSMI/CE/ FCC	147 x 75 x 49
	**FSP060-DHAN3**	60W	90 ~ 264 VAC		5V			85%	0°C ~ 40°C	UL/TUV/CCC/ GS/PSE/RCM/ CE/KC /BSMI	62 x 110 x 31.5
	**FSP036-RHBN3**	36W	90 ~ 264 VAC		3 A			88.3%	0°C ~ 40°C	UL/TUV/CCC/ GS/CE/BSMI/ PSE/RCM/KC	37.8 x 89.8 x 27

FSP150-ABAN3

150 W AC/DC Adapter

150W

New





Plug Type: Power mini-DIN (4P)

**Meet ErP & PSE

Specifications

- Input Voltage Range: 90-264 VAC
- Input Frequency: 47-63 Hz
- Output Voltage: 19 V
- Output Current: 7.89 A
- Output Watts: 150 W
- Efficiency: 87%
- Operating Temperature: 0°C ~ 40°C
- Storage Temperature: -20°C ~ 80°C

Dimensions *(Unit: mm)*

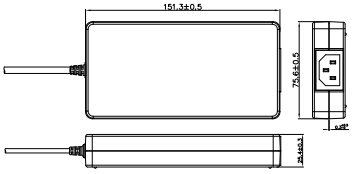

Ordering Information

Part No.	Description
63040-010150-700-RS	19 V 150W power adapter, 90~264 VAC input, ErP, PSE

FSP120-AHAN3

120 W AC/DC Adapter

120W





Plug Type: Power mini-DIN (4P)

**Meet ErP & PSE

Specifications

- Input Voltage Range: 90-264 VAC
- Input Frequency: 47-63 Hz
- Output Voltage: 12 V
- Output Current: 10 A
- Output Watts: 120 W
- Efficiency: 87%
- Operating Temperature: 0°C ~ 40°C
- Storage Temperature: -20°C ~ 80°C

Dimensions *(Unit: mm)*

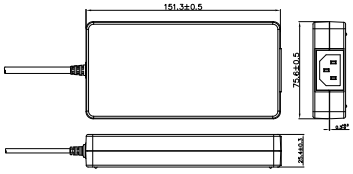

Ordering Information

Part No.	Description
63040-010120-300-RS	12 V 120W power adapter, 90~264 VAC input, ErP, PSE

FSP096-AHAN3

96 W AC/DC Adapter

96W



**Meet ErP & PSE



Plug Type: Power mini-DIN (4P)

Specifications

- Input Voltage Range: 90-264 VAC
- Input Frequency: 47-63 Hz
- Output Voltage: 12 V
- Output Current: 8 A
- Output Watts: 96 W
- Efficiency: 88%
- Operating Temperature: 0°C ~ 40°C
- Storage Temperature: -20°C ~ 80°C

Dimensions *(Unit: mm)*

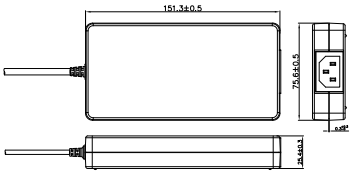

Ordering Information

Part No.	Description
63040-010096-200-RS	12 V 96W power adapter with DIN 4-pin/lock 90~264 VAC input, ErP, PSE, KC, BSMI

FSP090-DBBN3

87 W AC/DC Adapter

90W



**Meet ErP & PSE



Plug Type: Power mini-DIN (4P)

Specifications

- Input Voltage Range: 90-264 VAC
- Input Frequency: 47-63 Hz
- Output Voltage: 19 V
- Output Current: 4.74 A
- Output Watts: 90 W
- Efficiency: 88%
- Operating Temperature: 0°C ~ 40°C
- Storage Temperature: -20°C ~ 80°C

Dimensions *(Unit: mm)*

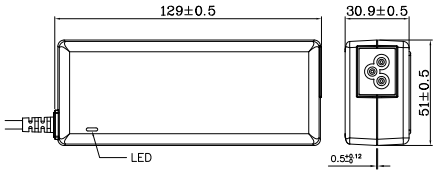

Ordering Information

Part No.	Description
待提供	19 V 90W power adapter with DIN 4-pin/lock 90~264 VAC input, ErP

FSP065-RBBN3

65W

65 W AC/DC Adapter





Plug Type: øin 2.1 mm / øout 5.5 mm

**Meet ErP & PSE

Specifications

- Input Voltage Range: 90-264 VAC
- Input Frequency: 47-63 Hz
- Output Voltage: 19 V
- Output Current: 3.42 A
- Output Watts: 65 W
- Efficiency: 86%
- Operating Temperature: 0°C ~ 40°C
- Storage Temperature: -20°C ~80°C

Dimensions *(Unit: mm)*

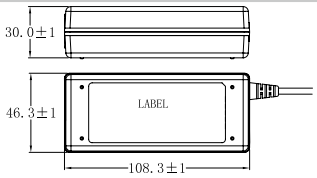

Ordering Information

Part No.	Description
63040-010065-710-RS	19 V 65W power adapter with Φ2.1/Φ5.5/lock 90~264 VAC input, ErP, PSE

63040-010060-020

60W

60 W AC/DC Adapter

Medical





Plug Type: øin 2.5 mm / øout 5.5 mm

**Meet ErP

Specifications

- Input Voltage Range: 90-264 VAC
- Input Frequency: 47-63 Hz
- Output Voltage: 12 V
- Output Current: 5 A
- Output Watts: 60 W
- Efficiency: 85%
- Operating Temperature: 0°C ~ 60°C
- Storage Temperature: -40°C ~ 85°C

Dimensions *(Unit: mm)*

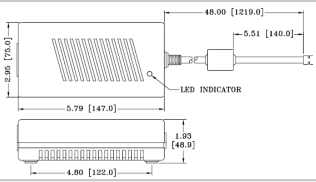

Ordering Information

Part No.	Description
63040-010060-020-RS	12 V 60W medical power adapter with Φ2.5/Φ5.5 90~264 VAC input, ErP

FSP060-DHAN3

60W

60 W AC/DC Adapter





Plug Type: øin 2.5 mm / øout 5.5 mm

**Meet ErP & PSE

Specifications

- Input Voltage Range: 90-264 VAC
- Input Frequency: 47-63 Hz
- Output Voltage: 12 V
- Output Current: 5 A
- Output Watts: 60 W
- Efficiency: 85%
- Operating Temperature: 0°C ~ 40°C
- Storage Temperature: -20°C ~ 65°C

Dimensions *(Unit: mm)*



Ordering Information

Part No.	Description
63040-010060-211-RS	12 V 60W power adapter with lock screw 90~264 VAC input, ErP, PSE
63040-010060-200-RS	12 V 60W power adapter with none lock 90~264 VAC input, ErP, PSE

FSP036-RHBN3

36W

36 W AC/DC Adapter





Plug Type: øin 2.5 mm / øout 5.5 mm

**Meet ErP & PSE

Specifications

- Input Voltage Range: 90-264 VAC
- Input Frequency: 47-63 Hz
- Output Voltage: 12 V
- Output Current: 3 A
- Output Watts: 36 W
- Efficiency: 88.3%
- Operating Temperature: 0°C ~ 40°C
- Storage Temperature: -20°C ~ 80°C

Dimensions *(Unit: mm)*

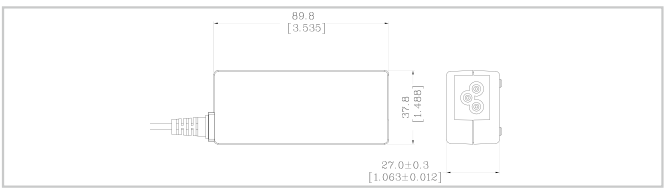

Ordering Information

Part No.	Description
63040-010036-210-RS	12 V 36W Power adapter with lock screw, 90~264VAC input, ErP, PSE
63040-010036-220-RS	12 V 36W Power adapter without lock, 90~264VAC input, ErP, PSE

How to Configure the IDD & PM_P Series

AT Mode

1. Power supply without any control signal
2. Power is controlled directly by the power supply's on/off switch.

■ Installation

Step 1. Set the jumper on the power modules and SBC to AT mode (if available)

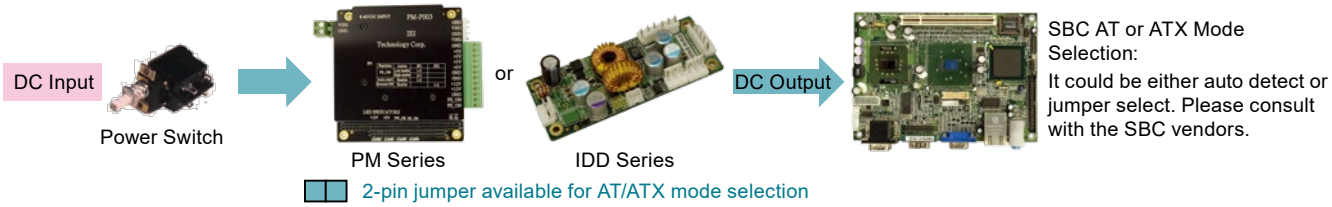

Step 2. Connect all input and output power cables **Step 3.** Wire/Isolate DC input by power switch **Step 4.** Power up by switch

ATX Mode (supports normal Windows® OS power down)

1. Required 5VSB (5V standby power) to SBC.
2. Power supply on/off control by “PS_On#” signal.
3. PS_On# is an active low signal that turns on all power rails.

■ Installation

Step 1. Set the jumper on the power modules and SBC to ATX mode (if available)

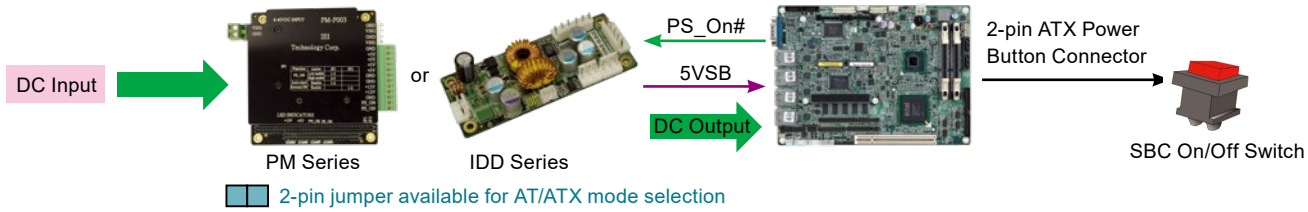

Step 2. Wire 5VSB and PS_ON# from power module to SBC **Step 3.** Wire all input, output power cables **Step 4.** Power up system by SBC on/off switch

Simulated AT Mode

1. The 5 V standby power is not provided to the SBC.
2. Power supply power is controlled by the "PS_On#" signal.
3. The power switch is connected to the power supply.

■ Installation

Step 1. Set the jumper on the power modules to ATX mode and set the jumper on the SBC to AT mode (if available)

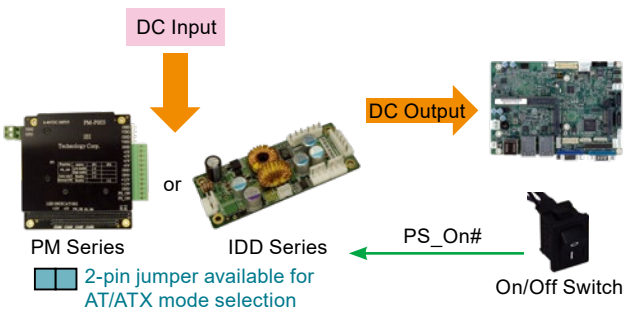

Step 2. Connect 5VSB & PS_ON# from the power module to the SBC.

Step 3. Connect all input and output power cables.

Step 4. Power up the system using the power switch connected to the SBC.

From Scratch to Sustain - Commitment

A partnership with IEI does not end at product shipment. We’re beside you with ongoing product support as your products evolve and change to meet emerging market requirements.

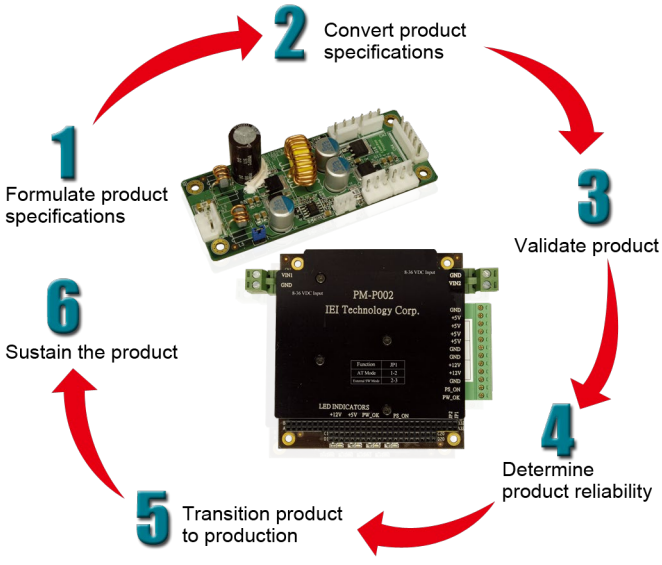

Product List

Model No.	Dimensions	Maximum Output Power	Input Voltage	Maximum Output Current						
				12V	5V	3.3V	-12V	5VSB	16V	20V
IDDV-6304140A	45 mm x 160 mm	140 W	6 ~ 30 V	4 A	10 A	10 A	0.15 A	1.5 A	-	-
IDD-9364120A	45 mm x 160 mm	120 W	9 ~ 36 V	4 A	10 A	8 A	0.3 A	2 A	-	-
IDD-241100	40 mm x 100 mm	100 W	24 V	8.3 A	-	-	-	-	-	-
IDD-936160	25 mm x 82 mm	60 W	9 ~ 36 V	5 A	-	-	-	-	-	-
PM-P006UPS	3.775" x 3.55"	65 W	6 ~ 36 V	4 A	10 A	8 A	-	1 A	-	-
IDD-936260A	40 mm x 100 mm	60 W	9 ~ 36 V	3 A	10 A	-	-	0.5 A	-	-
IDD-12250A	40 mm x 100 mm	50 W + 60 W	12 V	5 A	10 A	-	-	0.5 A	-	-

Naming Conventions:

PM-P xxx yy

- yy — Extra Features
- xxx — Model Number
- P — Power Modules
- PM — PC/104 Form Factor

IDD xx - 630 4 120 A

- A — ATX On/Off Support
- 120 — Output Wattage
- 4 — Output Voltage Number
- 630 — Input Voltage Range
- xx — Extra Features
- IDD — Industry DC to DC Converter

Output Power Calculation

P (Wattage) = V (Voltage) x I (Current)
Pt = Total Output Power
I1 = Current of Output Voltage1
In = Current of Output Voltagen
V1 = Output Voltage1
Vn = Output Voltagen
Pt = V1 x I1 + V2 x I2 + ... + Vn x In
Pt must be less than max. output power and individual output current must not exceed max. output current.

Dedicated Engineering Team - Professional

Our dedicated team offers application-specific integrated solutions and will design a customized product that will put you out in front of the competition.

Our solutions include standard/non-standard voltages, isolated/non-isolated, any form factor, power sequencing, battery chargers, electromechanical interference protection, thermal management, remote on/off and I/O interface.



Advanced Test Equipment – Precision & Reliability



Timing/Noise Analyzer Chroma 6011



Electronic Load Chroma 6312 Series



Power Analyzer Chroma 6632

IDDV-6304140A

140 W DC/DC Smart ATX Converter Module for Vehicle

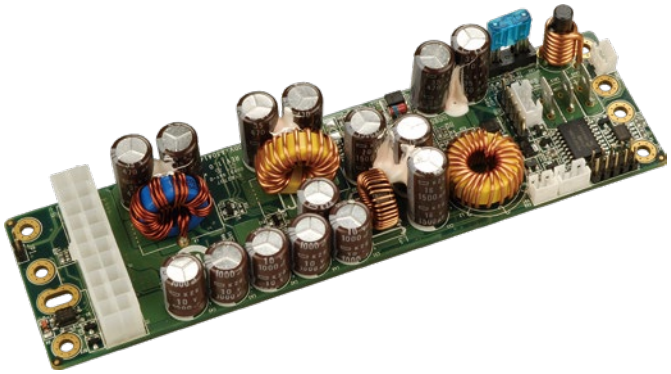

Dedicated ATX power for car PC and battery powered applications

Designed to provide power and to control power on/off switch of a motherboard based on the ignition status.

Features

1. Wide input range: 6-30 VDC
2. Smart system on/off control
3. Six selectable power on/off timing modes
4. Load down protection
5. Over voltage protection
6. Short circuit protection
7. Over current protection
8. Battery voltage monitor
9. Amplifier on-delay control
10. RoHS compliant
11. Compact size
12. Infrared remote off (optional)

Dimensions *(Unit: mm)*

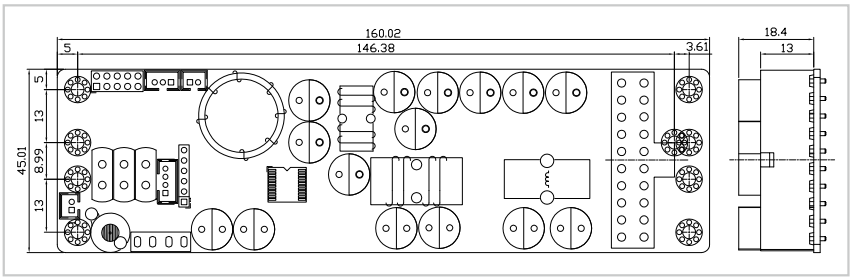

Specifications

- Output (max.): 5 V@10 A, 3.3 V@10 A, 12 V@4 A, -12 V@0.15 A & 5VSB@1.5 A
- Max. total output: 140 W
- Input: 6 VDC to 30 VDC
  Min. input operating voltage: 5.7 V
  Max. input operating voltage: 30 V
- Deep-discharge shut down voltage: 10.6 V
- Startup voltage: 8 V
- Efficiency: up to 90%
- Dimensions (mm): 45 x 160
- Weight (NW): 118 g
- Operating temperature: -20°C ~ 85°C
- Storage temperature: -25°C ~ 90°C

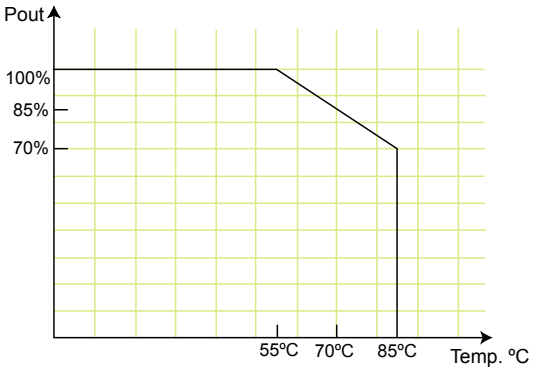

Pin Assignments

Input Power Connector

CN15	Batt (+)
CN16	ACC ON
CN17	Batt (-)

Output Power Connector

J1	Standard 20-pin ATX

Packing Information

1 x IDDV-6304140A
1 x QIG
1 x Wire cable for PWR/SW and MB/SW (P/N: 32100-153400-RS)
1 x Wire cable for LED/AMP (P/N: 32100-153500-RS)

Ordering Information

Part No.	Description
IDDV-6304140A-R10	140 W DC/DC 6-30 VDC input, vehicle converter module

PCs Still Consume Power While Off

A typical PC consumes 500mW of power when the system is powered off. The current computer market trend demands more and more standby power.

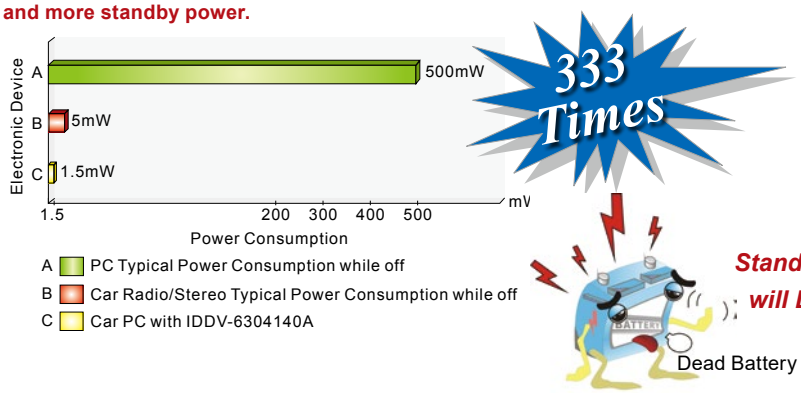

Standard ATX Power Supply will Drain the Car Battery!

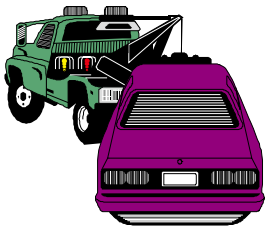

How the IDDV-6304140A works to keep your battery alive

Step1. Ignition=Off
The IDDV-6304140A cuts off all the power rails including 5VSB. The internal µP power consumption keeps less than 1.5mW.

Step2. Ignition=On (ACC On)
The IDDV-6304140A waits for 10 seconds then turns on the 5VSB rail.
Auto On (jumper selectable) - After 1 second, the µP sends an "ON" signal to the motherboard via the two wires connected to the motherboard's on/off pins.
Manual On (jumper selectable) - Nothing happens until the power button on the IDDV-6304140A is pushed.

Step3. Ignition=On
During driving: acts like a regular PC, turns on/off anytime by pushing the on/off button.

Step4. Ignition=Soft Off
The IDDV-6304140A waits for "10~40" seconds (jumper selectable), and then µP sends a signal to turn off the motherboard. The computer should turn off gracefully during the shutdown procedure. During this period, normal power will be available for the system to perform normal shutdown.

Step5. Ignition=Hard Off
5VSB is still available for 0 seconds, 45 seconds, 1 hour, or never (jumper selectable) before being cut off by µP. At this stage, the system will keep minimum power consumption so that the system won't drain the car battery.

12V Battery Vehicle Load Dump Transients

'Load dump' transients occur when a battery are disconnected from the charging system during charge. The alternator, with a finite response time of 40ms to 400ms, generates power with nowhere to go. This damages electronic devices.

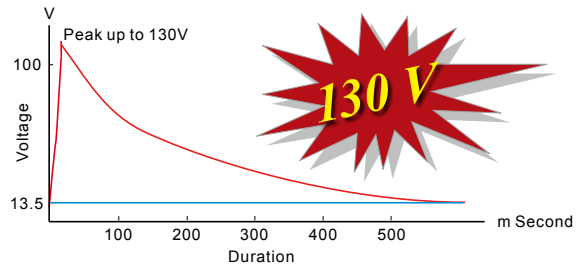

12V System
Load Dump Transients

Load dump transients typically reach peak voltages of 130 volts in 12 volt systems with relatively slow rise times.

EMI sprays and RFI sparking is everywhere. Electrical transients run zapping embedded electronic components. The electronic components located in a vehicle must withstand 600V transients and "load dump" situations.

IDDV-6304140A Wiring Diagram

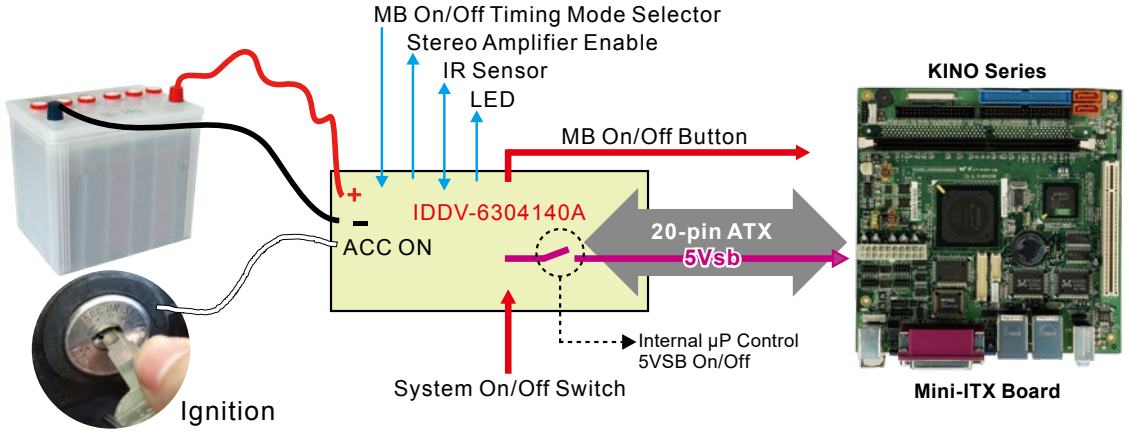

IDD-9364120A

120 W DC/DC Converter Module

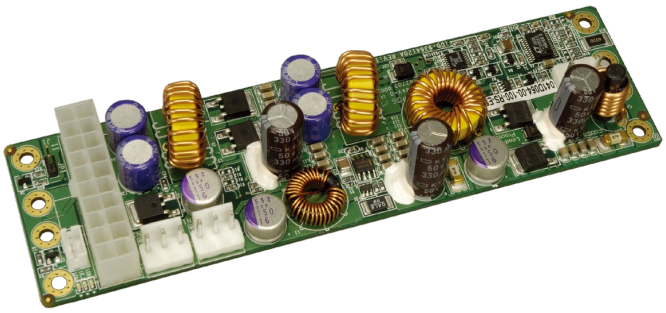

Features

1. Wide input range: 9-36 VDC
2. AT or ATX mode on/off
3. Output voltage protection
4. Up to 90% efficiency
5. RoHS compliant
6. Compact size

Specifications

- Output (max.): 12 V@4 A, 5 V@10 A, 3.3 V@8 A, -12 V@0.3 A & 5VSB@2 A
- Max. total output: 120 W
- Input: 9 VDC to 36 VDC
- Performance characteristics
  - Noise & ripple: <240 mV
  - Line regulation: <50 mV
  - Load regulation: <100 mV
  - Efficiency: Up to 90%
- Dimensions (mm): 45 x 160
- Weight (NW): 104 g
- Operating temperature: -20°C ~ 70°C
- Storage temperature: -25°C ~ 75°C

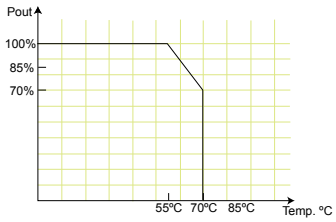

Dimensions (Unit: mm)

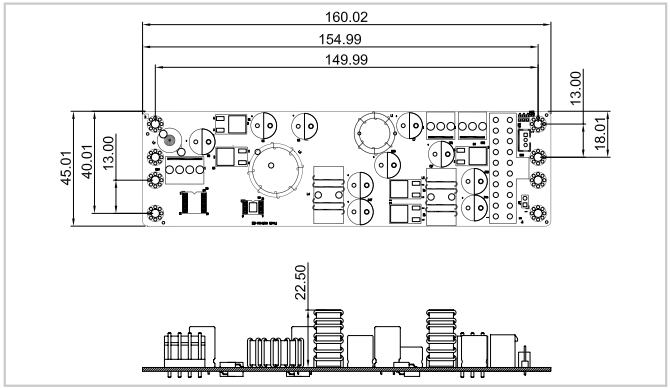

Packing Information

1 x IDD-9364120A
1 x QIG

Ordering Information

Part No.	Description
IDD-9364120A-R11	120 W DC/DC 9~36 V input, 12 V, 5 V, 3.3 V, -12 V & 5VSB output
CB-3PSATA-RS	10 cm cable for SATA power
CB-3PIDE-RS	10 cm cable for IDE HDD power
CB-NOLP4-RS	20 cm cable for terminal block DC input
32102-021500-200-RS	30 cm 20-pin ATX to 20-pin ATX cable

Pin Assignments

Input Power Connector

CN4	Pin 1	Pin 2	Pin 3	Pin 4
	VIN	VIN	GND	GND

Output Power Connector

CN1, CN2	Pin 1	Pin 2	Pin 3
	+5 V	GND	+12 V
J1	Standard 2-pin ATX		

ATX Mode Connector

CN3	Pin 1	Pin 2	Pin 3
	5VSB	GND	PS_ON

Wire Harness Selection Guide

DC Input (CN4)



Option 1.
PN: CB-NOLP4-RS
Cable for terminal block

I/O Power (CN1 & CN2)



Option 1.
PN: CB-3PSATA-RS
Cable for SATA

SBC Main Power (J1)



Option 1.
PN: 32102-021500-200-RS
20-pin ATX to 20-pin ATX cable



Option 2.
PN: CB-3PIDE-RS
Cable for IDE HDD or any STD 4-pin I/O devices

IDD-241100

100 W DC/DC Converter Module

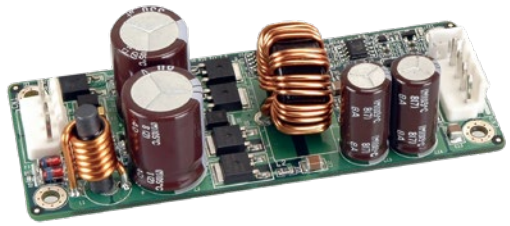

Features

1. 100W total power
2. AT mode on/off
3. Up to 90% efficiency
4. RoHS compliant
5. Compact size

Specifications

- Output (max.): 12 V@8.33 A
- Max. total output: 100 W
- Input: 24 VDC
- Performance characteristics
  Noise & ripple: <240 mV
  Load regulation: <240 mV
  Efficiency: Up to 90%
- Dimensions (mm): 40 x 100
- Weight (NW): 60 g
- Operating temperature: -20°C ~ 70°C

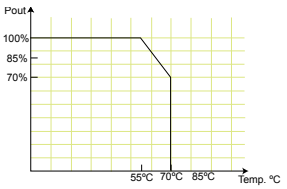

Wire Harness Selection Guide

DC Input (CN1)



PN: CB-NOLP4-RS
Cable for terminal block

Dimensions (Unit: mm)

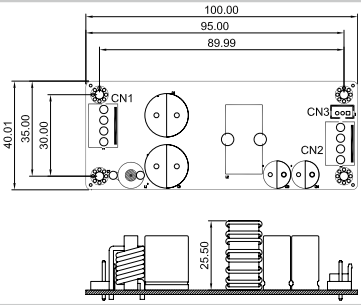

Packing Information

1 x IDD-241100	1 x QIG

Ordering Information

Part No.	Description
IDD-241100-R10	100 W DC/DC 24 V input, 12 V output with 100W total power
CB-NOLP4-RS	20 cm cable for terminal block DC input

Pin Assignments

Input Power Connector

	Pin 1	Pin 2	Pin 3	Pin 4
CN1	VIN	VIN	GND	GND

Output Power Connector

	Pin 1	Pin 2	Pin 3	Pin 4
CN2	+12 V	+12V	GND	GND

Power on/off, LED Connector

	Pin 1	Pin 2	Pin 3
CN3	SHDN# (Shut down output power function, short Pin1 & Pin2)	GND	LEDA (Disable LED function, short Pin2 & Pin3)

IDD-936160

60 W DC/DC Converter Module



IDD-936160 60W DC/DC Converter Module is a high performance buck-boost switching regulator power module. The constant frequency current mode architecture allows a phaselockable frequency of up to 400 kHz. With a wide 9V to 36V input and 12V output and seamless transfers between operating modes, the IDD-936160 is ideal for embedded systems with limited space.

Features

1. Wide input range: 9-36 VDC
2. 12 VDC output up to 5 Amp
3. Compact size
4. Efficiency up to 95%
5. RoHS compliant

Specifications

- Output (max.): 12 V@5 A
  Max. total output: 60 W
- Input: 9 VDC to 36 VDC
- Performance characteristics
  Noise & ripple: <300 mV
  Line regulation: <300 mV
  Load regulation: <85 mV
  Efficiency up to 95%
- Dimensions (mm): 82 x 25
- Weight (NW): 28 g
- Operating temperature: -40°C ~ 85°C

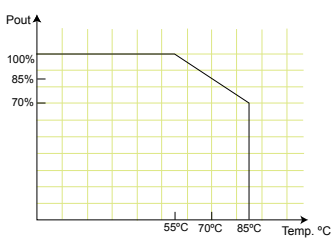

Dimensions (Unit: mm)

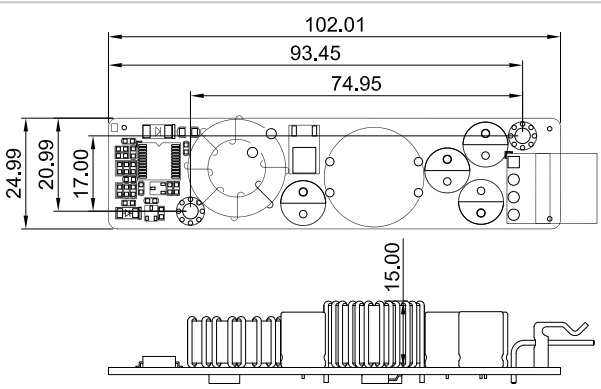

Pin Assignments

Input/Output Connector

	Pin1	Pin2	Pin3
VOUT1	+12 V Output	GND	Vin



Cable
P/N: 32102-015700-100-RS

Packing Information

1 x IDD-936160	1 x QIG
1 x 300 mm wire cable (P/N: 32102-015700-100-RS)	

Ordering Information

Part No.	Description
IDD-936160-R20	60 W DC/DC 9~36 V input, 12 V output

PM-P006UPS

65 W DC/DC Converter Module, with UPS

65W

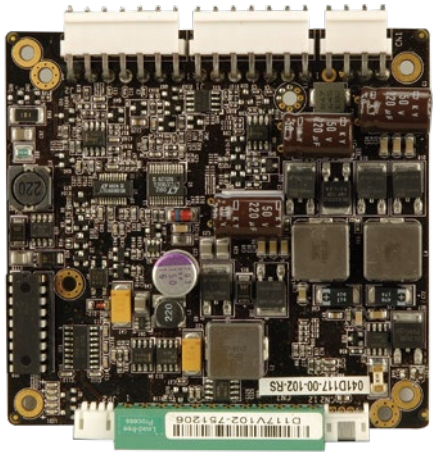

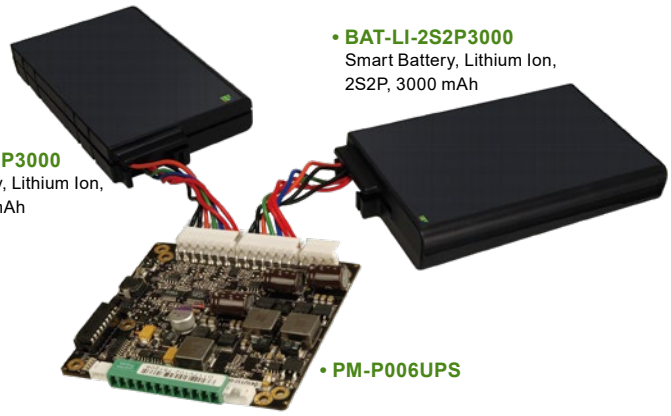

- **BAT-LI-2S2P3000**
  Smart Battery, Lithium Ion, 2S2P, 3000 mAh
- **BAT-LI-2S2P3000**
  Smart Battery, Lithium Ion, 2S2P, 3000 mAh
- **PM-P006UPS**

Features

1. Load down protection
2. Over voltage protection
3. Short circuit protection
4. Over current protection
5. Smart battery charger for lithium ion
6. I/O interface: SMBus/I^{2}C & RS-232
7. Support up to two battery packs
8. AT/ATX modes
9. Utility program: pull data out through RS-232 to a system

Specifications

- Output (max.): 12 V@4 A, 5 V@10 A, 3.3 V@8 A, 5VSB@1 A, & -12 V @0.1 A
- Max. total output: 65 W
- Input: 6 VDC to 36 VDC
- Battery charge voltage: 12 V ~ 36 V
- Efficiency: up to 90%
- Dimensions (mm): 90 x 96
- Weight (NW): 178 g
- Operating temperature: -20°C ~ 85°C (without smart battery)
  Operating temperature: -10°C ~ 60°C (with smart battery)
- Storage temperature: -35ºC ~ 95ºC

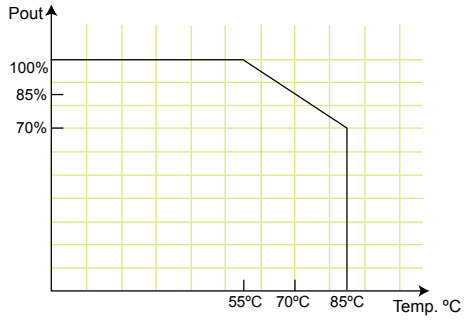

Dimensions *(Unit: mm)*

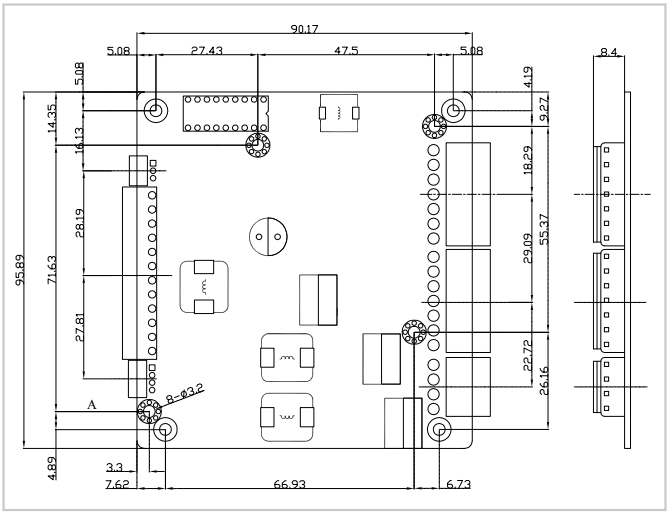

Packing Information

1 x PM-P006UPS
1 x QIG
1 x DB-9 pin connector cable (32100-157200-RS)

Applications


Battery backup system


Portable equipment


Power sensitive equipment

Ordering Information

Part No.	Description
PM-P006UPS-R10	65 W ATX DC/DC 6-36 VDC input, 12 V, 5 V, 3.3 V, -12 V and 5VSB PC/104 power module with UPS
BAT-LI-2S2P3000-R10	Smart Battery, lithium ion, 2S2P, 3000 mAh
CB-NOLP4-RS	20 cm cable for terminal block DC input

High Energy Density, Light Weight and Compact DC/DC UPS & Power Module

- Protects your precious equipment from damage
- Reduces the risk of losing your valuable data

An uninterruptible power supply provides emergency backup power when the main power is lost.

Benefits:

- Provides power for a certain amount of time after a power failure has occurred
- Provides stable power to equipment during line sags and spikes
- Absorbs power surges and transients
- Smooths out noisy power sources

The utility software displays the following information:

- Current power source
- Battery status
- Charging status
- Remaining battery percentage

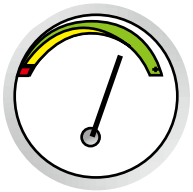

Battery Capacity Status

Level 2 Smart Battery Charger & Power Modules

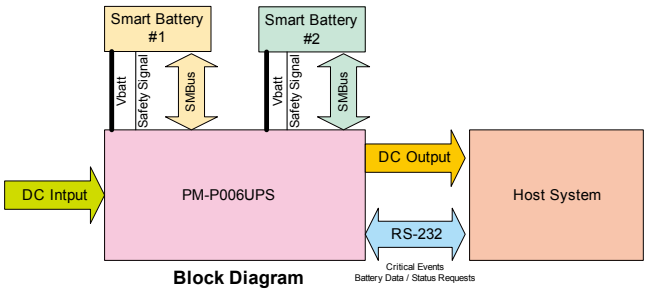

Block Diagram

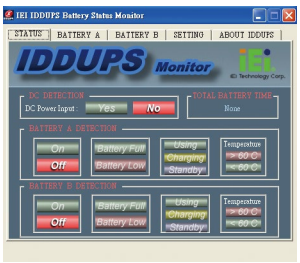

Battery Monitoring Utility



Battery Monitoring Connection Cable (PN: 32100-157200-RS)

Battery Pack (P/N: BAT-LI-2S2P3000)



Battery Type	Lithium Ion			
Pout (W)	100	80	60	40
Time (min.)	8	14	18	27
Dimensions (mm)	148 x 89 x 20			
Capacity	3000 mAh			

Pin Assignments

Input Power Connector

CN1	Pin 1	Pin 2	Pin 3	Pin 4
	VIN	VIN	Gnd	Gnd

I/O Interface RS-232 Connector

JP2	Pin 1	Pin 2	Pin 3
	Gnd	TX	RX

Output Power Connector

CN7	Pin 1	Pin 2	Pin 3	Pin 4	Pin 5	Pin 6	Pin 7	Pin 8	Pin 9	Pin 10	Pin 11	Pin 12
	N12V	Gnd	12 V	Gnd	3 V	3 V	Gnd	5 V	5 V	Gnd	5 VSB	Gnd

ATX Mode Connector

CN2	Pin 1	Pin 2	Pin 3	Pin 4
	PWROK	5 VSB	Gnd	PS_ON

Battery Connector

J1, J2	Pin 1	Pin 2	Pin 3	Pin 4	Pin 5	Pin 6	Pin 7
	BAT+	BAT+	Clock	Data	Temp	Gnd	Gnd

Wire Harness Selection Guide

DC Input



Option 1.

PN: CB-NOLP4-RS

Cable for terminal block

IDD-936260A

60 W DC/DC Converter Module

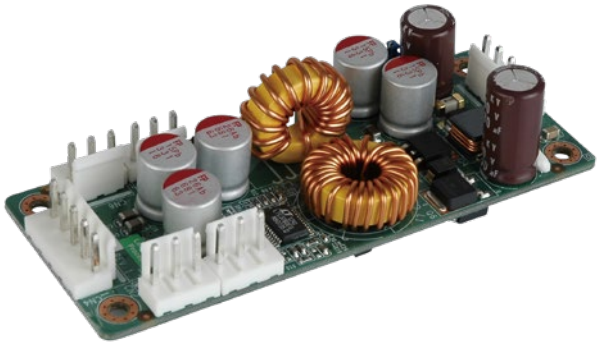

Features

1. Wide input range: 9-36 VDC
2. AT or ATX mode on/off
3. Up to 90% efficiency
4. RoHS compliant
5. Compact size

Specifications

- Output (max.): 12 V@3 A, 5 V@10 A & 5VSB@0.5 A
- Max. total output: 60 W
- Input: 9 VDC to 36 VDC
- Performance characteristics
  Noise & ripple: <240 mV
  Line regulation: <50 mV
  Load regulation: <100 mV
  Efficiency: Up to 90%
- Dimensions (mm): 40 x 100
- Weight (NW): 58 g
- Operating temperature: -20°C ~ 70°C



Dimensions *(Unit: mm)*

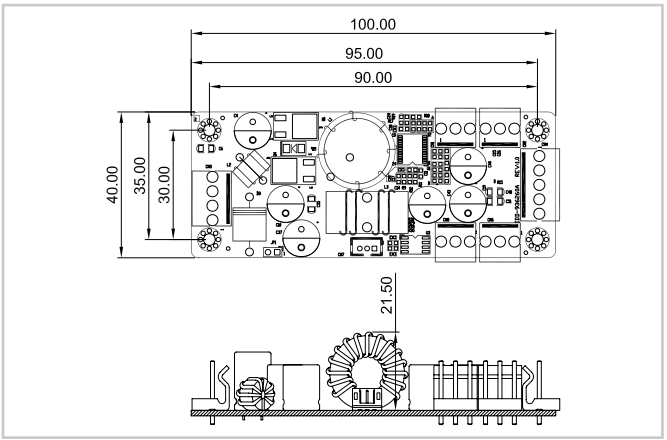

■ Pin Assignments

Input Power Connector

CN3	Pin 1	Pin 2	Pin 3	Pin 4
	VIN	VIN	GND	GND

Output Power Connector

CN4	Pin 1	Pin 2	Pin 3	Pin 4	Pin 5
	+5 V	+5 V	GND	GND	+12 V

CN1 CN2 CN5 CN6	Pin 1	Pin 2	Pin 3
	+5 V	GND	+12 V

ATX Mode Connector

CN7	Pin 1	Pin 2	Pin 3
	5VSB	GND	PS_ON

Packing Information

1 x IDD-936260A
1 x QIG

Ordering Information

Part No.	Description
IDD-936260A-R11	60 W DC/DC 9~36 V input, 12 V, 5 V & 5VSB output
CB-3PSATA-RS	10 cm cable for SATA power
CB-3PIDE-RS	10 cm cable for IDE HDD power
CB-NOLP4-RS	20 cm cable for terminal block DC input

■ Wire Harness Selection Guide

DC Input (CN3)



Option 1.
PN: CB-NOLP4-RS
Cable for terminal block

I/O Power (CN1, CN2, CN5 & CN6)



Option 1.
PN: CB-3PSATA-RS
Cable for SATA



Option 2.
PN: CB-3PIDE-RS
Cable for IDE HDD or any STD 4 pins I/O devices

IDD-12250A

50 W+60 W DC/DC Converter Module

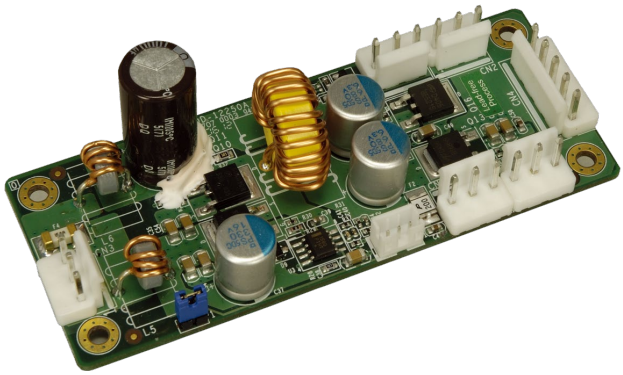

Features

1. 50 W + 60 W (12 V pass thru), total power 110 W
2. AT or ATX mode on/off
3. Up to 90% efficiency
4. RoHS compliant
5. Compact size

Specifications

- Output (max.): 12 V@5 A (pass thru), 5 V@10 A & 5VSB@0.5 A
  Max. total output: 50 W plus 60 W (12 V pass through)
- Input: 12 VDC
- Performance characteristics
  Noise & ripple: <25 mV
  Load regulation: <120 mV
  Efficiency: Up to 90%
- Dimensions (mm): 40 x 100
- Weight (NW): 46 g
- Operating temperature: 0°C ~ 70°C

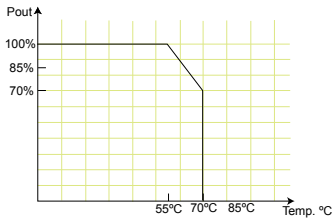

Dimensions *(Unit: mm)*

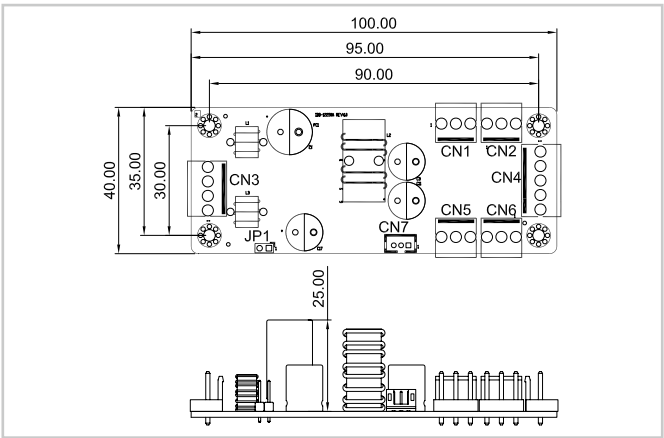

■ Pin Assignments

Input Power Connector

CN3	Pin 1	Pin 2	Pin 3	Pin 4
	VIN	VIN	GND	GND

Output Power Connector

CN4	Pin 1	Pin 2	Pin 3	Pin 4	Pin 5
	+5 V	+5 V	GND	GND	+12V

CN1 CN2 CN5 CN6	Pin 1	Pin 2	Pin 3
	+5V	GND	+12V

ATX Mode Connector

CN7	Pin 1	Pin 2	Pin 3
	5VSB	GND	PS_ON

Packing Information

1 x IDD-12250A
1 x QIG

Ordering Information

Part No.	Description
IDD-12250A-R11	50 W+60 W DC/DC 12 V input, 12 V, 5 V & 5VSB output
CB-3PSATA-RS	10 cm cable for SATA power
CB-3PIDE-RS	10 cm cable for IDE HDD power
CB-NOLP4-RS	20 cm cable for terminal block DC input

■ Wire Harness Selection Guide

DC Input (CN3)



Option 1.
PN: CB-NOLP4-RS
Cable for terminal block

I/O Power (CN1, CN2, CN5 & CN6)



Option 1.
PN: CB-3PSATA-RS
Cable for SATA



Option 2.
PN: CB-3PIDE-RS
Cable for IDE HDD or any STD 4 pins I/O devices

CPU Cooler *High performance thermal solutions*

Choosing the wrong CPU cooler for a system can lead to serious overheating, resulting in system shutdown and potential damage to CPUs.
For industrial applications, the following CPU coolers fit the needs of various operating environments, where different levels of cooling are required.

	IEI Special Desktop Core™ CPU Cooler				
					
Where Used	For spacial models: SPCIE-C2260, PCIE-Q870, PCIE-H810, WSB-H810, KINO-AQ870				
Model Name	**CF-1150SA-R10**	**CF-1150SB-R11**	**CF-1150SC-R20**	**CF-1150SE-R11**	**CF-1150SF-R10**
Description	IEI customized cooler for LGA1150 Intel® CPU, RoHS		IEI customized cooler for LGA1150 Intel® CPU, 1U chassis compatible, RoHS	IEI customized cooler for LGA1150 Intel® CPU, RoHS	IEI customized cooler for LGA1150 Intel® CPU, RoHS
CPU Solution	Intel® Core™ i7/i5	Intel® Core™ i7/i5	Intel® Core™ i7/i5	Intel® Core™ i7/i5	Intel® Core™ i7/i5
Socket Solution	LGA1150/LGA1151	LGA1150/LGA1151	LGA1150/LGA1151	LGA1150/LGA1151	LGA1150/LGA1151
Dimensions (mm)	83 x 83 x 57	96 x 82 x 60	105 x 80 x 23.7	107 x 70 x 60	107 x 70 x 35
Material	Al	Al	Cu	Cu	Al
Bearing Type	Ball And sleeve	Two-ball	Two-ball	Two-ball	Two-ball
Capability (Watt)	**95 W**	**65 W**	**65 W**	**95 W**	**54 W**
Fan Speed (RPM)	4200	3500	5500	4200	4500
Noise Level (dBA)	40	41	55	36	39
Life Expectancy (hrs)	40,000	50,000	50,000	50,000	50,000
Weight	330 g	286 g	406 g	812 g	220 g

	Intel® Standard Desktop Core™ CPU Cooler				
	New 	New 	New 	New 	
	LGA115X (LGA1150/LGA1151/LGA1155/LGA1156)				
Model Name	**CF-115XA-R10**	**CF-115XC-R10**	**CF-115XD-R10**	**CF-115XE-R10**	**CF-115XF-R10**
Description	High performance LGA1155/ LGA1156 cooler kit, 1U chassis compatible	Low power LGA1155/LGA1156 cooler Kit, RoHS		High performance LGA1155/ LGA1156 CPU cooler, RoHS	High performance LGA1155/ LGA1156 CPU cooler, RoHS
CPU Solution	Intel® Core™ i5/i3	Intel® Core™ i5/i3	Intel® Core™ i7/i5/i3	Intel® Xeon®/Core™ i7/i5/i3	Intel® Xeon®/Core™ i7/i5/i3
Socket Solution	LGA115X (LGA1150/LGA1151/LGA1155/LGA1156)				
Dimensions (mm)	89 x 92.6 x 27.4	94.34*94.34*43.4	94.34*94.34*43.4	91 x 91 x 84	90 x 90 x 69.3
Material	Cu	Al	Cu+Al	Al	Al
Bearing Type	Two-ball	Two Ball	Two Ball	Ball and Sleeve	Two Ball
Capability (Watt)	**73 W**	**45W**	**65W**	**95 W**	**95 W**
Fan Speed (RPM)	5500	3600	3600	4200	4200
Noise Level (dBA)	51	40	40	40	48
Life Expectancy (hrs)	50,000	70000	70000	40,000	50,000
Weight	422 g	226g	260g	301 g	432

CPU Cooler *High performance thermal solutions*

Choosing the wrong CPU cooler for a system can lead to serious overheating, resulting in system shutdown and potential damage to CPUs.
For industrial applications, the following CPU coolers fit the needs of various operating environments, where different levels of cooling are required.

	Desktop CPU Cooler	
		
	LGA775 Cooler	
Model Name	**CF-775B-RS-R11**	**CF-520-RS-R11**
Description	High performance 1U LGA 775 CPU cooler, with 7010 fan, RoHS	High performance LGA 775 CPU cooler, RoHS
CPU Solution	Intel® Core™2 Duo	Intel® Core™2 Duo
Socket Solution	LGA 775	LGA 775
Dimensions (mm)	80.5 x 81 x 28.2	115 x 115 x 67
Material	Cu	Aluminum alloy
Bearing Type	Two-ball	Two-ball
Capability (Watt)	**90 W**	**115 W**
Fan Speed (RPM)	4250	4500
Noise Level (dBA)	40	47.5~51.5
Life Expectancy (hrs)	50,000	70,000
Weight	600 g	635 g

	CPU Cooler	Mobile Core™ i7 CPU Cooler	
			
	Blower	PGA989	
Model Name	**BF-02-RS**	**CF-989A-RS-R12**	**CF-989B-RS-R11**
Description	Bracket cooling fan, RoHS	High performance Socket-G (PGA989) smart fan CPU cooler, RoHS	High performance Socket-G (PGA989) CPU cooler, aluminum, RoHS
CPU Solution	Breaket cooling fan	Intel® Core™ i7/i5/i3	Intel® Core™ i7/i5/i3
Socket Solution		PGA989	PGA989
Dimensions (mm)	112 x 90 x 21	60 x 60 x 27.5	60 x 60 x 27.5
Material	Plastic	Cu	Al
Bearing Type	One-ball	Two-ball	Two-ball
Capability (Watt)		**55 W**	**50 W**
Fan Speed (RPM)	2800	4800	4800
Noise Level (dBA)	28	40	40
Life Expectancy (hrs)	45,000	50,000	50,000
Weight	107.5 g	255 g	26 g

Industrial SATADOM Series

The world's smallest high-speed SATADOM

The revolutionary form factor of SATADOM has been widely adopted by industrial and embedded system makers across the globe. With in-house designed SATA 6Gb/s controller, the SATADOM provides you not only the fastest read/write speed but also stable data transfer. Moreover, to address customer's challenging requirements, we have released a series of the smallest SATADOM which fits various kinds of compact systems. Here, we recommend five models by different heights. For the low-profile 1U system use, you can choose SL 3SE, SH 3SE, and SH 3ME.

SATA 6Gb/s Solutions

Powerful Performance

SATA 6Gb/s devices have 191% higher performance than SATA 3Gb/s devices.

Less Power Consumption

The advanced idle mode helps to save up to 35% of energy when system stays in idle, therefore the battery runtime increases and the system requests less power consumption than SATA 3Gb/s.

Greater Reliability

The in-house designed SATA 6Gb/s controller offers an excellent signal quality during data transfer, enhancing the system compatibility and stability.

Easier Use

Along with upgrading to SATA 6Gb/s, the one-touch activation mode of iSMART 3.2 can save hours of setup and maintenance time.

Model Name		IFM-3010V	IFM-3320M	IFM-3010L	IFM-3010H	IFM-3020-HM
Picture						
Key Features		1. Vertical version 2. Anti-vibration mechanical design	1. Vertical version 2. Writing protection 3. Anti-vibration mechanical design	1. SATA 6Gb/s interface 2. iSMART disk health monitoring 3. Intelligent error recovery system 4. Excellent data transfer speed 5. Zero mechanical interference 6. Anti-vibration mechanical design	1. Horizontal version 2. Only exposes 12mm height on the motherboard after installation	1. Low profile horizontal design 2. High IOPS
Interface		SATA 6Gb/s	SATA 6Gb/s	SATA 6Gb/s	SATA 6Gb/s	SATA 6Gb/s
Flash Type		SLC	MLC	SLC	SLC	MLC
Capacity (GB)		1GB~32GB	8GB~128GB	1GB~32GB	1GB~32GB	8GB~128GB
Sequential R/W		300/130	355/135	300/130	300/130	200/75
Max. Power Consumption		0.65W (5V x 130mA)	1W (5V x 200mA)	0.65A (5V x 130mA)	0.65W (5V x 130mA)	1.8W (5V x 370mA)
Thermal Sensor		Wide temperature model only	Wide temperature model only	Wide temperature model only	Wide temperature model only	Wide temperature model only
ATA Security		Yes	Yes	Yes	Yes	Yes
S.M.A.R.T		Yes	Yes	Yes	Yes	Yes
Dimensions (mm)		20.9 x 39.5 x 7.9	25.3 x 41.5 x 6.8	32.5 x 29.5 x 8.0	18.1 x 30.5 x 12	18.0 x 30.3 x12.5
Environment		Vibration: 20G@7~2000Hz, Shock: 1500G@0.5ms, Storage Temperature: -55°C ~ +95°C, MTBF: >3 million hours				
P/N	Standard (0°C~+70°C)	IFM-3010IS-1GB IFM-3010IS-2GB IFM-3010IS-4GB IFM-3010IS-8GB IFM-3010IS-16GB IFM-3010IS-32GB	IFM-3320IM-8GB-R21 IFM-3320IM-16GB-R21 IFM-3320IM-32GB-R21 IFM-3320IM-64GB-R21 IFM-3320IM-128GB-R21	IFM-3010IL-1GB IFM-3010IL-2GB IFM-3010IL-4GB IFM-3010IL-8GB IFM-3010IL-16GB IFM-3010IL-32GB	IFM-3010IPS-1GB IFM-3010IPS-2GB IFM-3010IPS-4GB IFM-3010IPS-8GB IFM-3010IPS-16GB IFM-3010IPS-32GB	IFM-3020IPSM-8GB-R21 IFM-3020IPSM-16GB-R21 IFM-3020IPSM-32GB-R21 IFM-3020IPSM-64GB-R21 IFM-3020IPSM-128GB-R21
	Wide Temperature (-40°C~+85°C)	IFM-3010WS-1GB IFM-3010WS-2GB IFM-3010WS-4GB IFM-3010WS-8GB IFM-3010WS-16GB IFM-3010WS-32GB	IFM-3320WM-8GB-R21 IFM-3320WM-16GB-R21 IFM-3320WM-32GB-R21 IFM-3320WM-64GB-R21 IFM-3320WM-128GB-R21	IFM-3010WL-1GB IFM-3010WL-2GB IFM-3010WL-4GB IFM-3010WL-8GB IFM-3010WL-16GB IFM-3010WL-32GB	IFM-3010WPS-1GB IFM-3010WPS-2GB IFM-3010WPS-4GB IFM-3010WPS-8GB IFM-3010WPS-16GB IFM-3010WPS-32GB	IFM-3020WPSM-8GB-R21 IFM-3020WPSM-16GB-R21 IFM-3020WPSM-32GB-R21 IFM-3020WPSM-64GB-R21 IFM-3020WPSM-128GB-R21

Industrial SSD Series

Breakthrough Technology of IFD-2530ISM & IFD-2530ISMD

With the release of the brand-new designed firmware algorithm, IFD-2530ISM and IFD-2530ISMD offer outstanding read and write performance and extended lifespan, and are compliant with the JEDEC 219 specifications. In addition, with the iData Guard Technology, IFD-2530ISM and IFD-2530ISMD support data integrity in the event of abnormal power failure. The wide operating temperature ranges from -40 °C to 85 °C.



Features of IFD-2530ISM & IFD-2530ISMD

IFD-2530ISM and IFD-2530ISMS provide a wide range demand of capacity. IFD-2530ISMD even supports large capacity up to 2TB.

	IFD-2540A2M	IFD-2530ISMD
DRAM-less Design	●	
Price	●	
Random Transfer Performance	● R: 31,000 IOPS/W: 40,000 IOPS (128GB)	● R: 70,000 IOPS/W: 64,000 IOPS (128GB)
Easy to Design in Small Form Factors	●	
Low Power Consumption	●	●
TRIM	●	●

Model Name		2.5" SATA 6Gb/s IFD-2520IS	2.5" SATA 6Gb/s IFD-2530ISMD	2.5" SATA 6Gb/s IFD-2540A2M
Picture				
Key Features		1. Intelligent error recovery system 2. Excellent data transfer speed 3. Enhanced power cycling management	1. EverGreen L² architecture 2. 7mm height mechanical design 3. Excellent random performance	1. 7mm height mechanical design 2. Low power consumption 3. Budget-friendly MLC-based solution
Interface		SATA 6Gb/s	SATA 6Gb/s	SATA 6Gb/s
Flash Type		SLC	MLC	MLC
Capacity (GB)		8GB~128GB	8GB~1TB	32GB~1TB
Sequential R/W		510/340	520/450	560/510
Max. Power Consumption		2.2W (5V x 450mA)	5W (5V x 1A)	0.5W (5V x 100 mA)
Thermal Sensor		Wide temperature model only	Wide temperature model only	Wide temperature model only
ATA Security		Yes	Yes	Yes
S.M.A.R.T		Yes	Yes	Yes
Dimensions (mm)		69.8 x 100.1 x 9.3	70.0 x 100.0 x 6.8	69.85 x 100 x 6.9
Environment		Vibration: 20G@7~2000Hz, Shock: 1500G@0.5ms, Storage Temperature: -55°C ~ +95°C, MTBF: >3 million hours		
P/N	Standard (0°C~+70°C)	IFD-2520IS-8GB IFD-2520IS-16GB IFD-2520IS-32GB IFD-2520IS-64GB IFD-2520IS-128GB	IFD-2530ISMD-8GB-R20 IFD-2530ISMD-16GB-R20 IFD-2530ISMD-32GB-R20 IFD-2530ISMD-64GB-R20 IFD-2530ISMD-128GB-R20 IFD-2530ISMD-256GB-R20 IFD-2530ISMD-512GB-R20 IFD-2530ISMD-1TB-R20	IFD-2540A2M-32GB-R10 IFD-2540A2M-64GB-R10 IFD-2540A2M-128GB-R10 IFD-2540A2M-256GB-R10 IFD-2540A2M-512GB-R10 IFD-2540A2M-1TB-R10
	Wide Temperature (-40°C~+85°C)	IFD-2520WT-8GB IFD-2520WT-16GB IFD-2520WT-32GB IFD-2520WT-64GB IFD-2520WT-128GB	IFD-2530WTMD-8GB-R20 IFD-2530WTMD-16GB-R20 IFD-2530WTMD-32GB-R20 IFD-2530WTMD-64GB-R20 IFD-2530WTMD-128GB-R20 IFD-2530WTMD-256GB-R20 IFD-2530WTMD-512GB-R20 IFD-2530WTMD-1TB-R20	IFD-2540AW2M-32GB-R10 IFD-2540AW2M-64GB-R10 IFD-2540AW2M-128GB-R10 IFD-2540AW2M-256GB-R10 IFD-2540AW2M-512GB-R10 IFD-2540AW2M-1TB-R10

Industrial SSD Series

Over-provisioning for SSDs

Maintain the high performance of SSDs with over-provisioning

All SSDs feature a reserved space for over-provisioning (OP). This allows the SSD to continue writing data without affecting performance when the SSD is almost out of storage space. However, if this reserved space is used up, the SSD needs to reorganize its internal data before any new data can be written. This data reorganization can have drastic impacts to both SSD performance and lifetime. SSDs with insufficient OP reserved space is like a restaurant where the staff do not have enough time to clean up the tables left by customers, resulting in guests waiting at the door. With additional reserved space for OP, it is like opening separate tables for new customers.

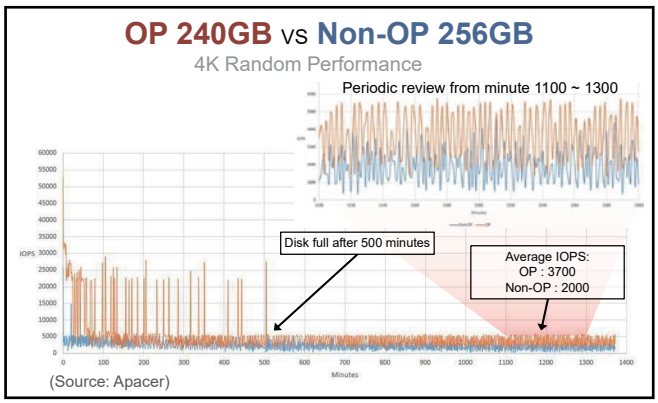

Due to cost considerations of SSD manufacturers and general usage cases, SSDs intended for general consumers only provide a minimal reserved space for OP. For a larger OP reserved space, expensive enterprise-level SSDs are required. Additional space for over-provisioning can be reserved at the OS level (or by other software). Research by mainstream SSD manufacturers has shown that on a 512 GB consumer-level SSD, an additional 5% reserved space for OP can more than double the lifespan (write endurance) of an SSD, and improve performance by nearly 100%.

SSDs with over-provisioning technology, while sacrificing a portion of the physical capacity, have more free blocks for wear-leveling and garbage collection to further improve lifespan and overall performance.

The 3D 2.5" SATA SSD is SATA 6Gb/s solid state disk, which delivers excellent performance, especially in random data transfer rate, and which offers reliability making it the ideal solution for a variety of applications, including embedded system, industrial computing, and enterprise field. The 3D 2.5" SSD not only performs unmatched performance but also designed with industrial storage technologies to ensure the data integrity and highest levels of reliability.

Features of IFD-2530ISM & IFD-2530ISMD

IFD-2530ISM and IFD-2530ISMS provide a wide range demand of capacity. IFD-2530ISMD even supports large capacity up to 2TB.

	IFD-2540A3T	IFD-2540I3TD
DRAM-less Design	●	
Price	●	
Random IOPS	● R: 80,000 IOPS/W: 71,000 IOPS (128GB)	● R: 87,000 IOPS/W: 66,000 IOPS (128GB)
Easy to Design in SFF	●	●
Low Power Consumption	●	
TRIM	●	●

Model Name	2.5" SATA 6Gb/s IFD-2540A3T		2.5" SATA 6Gb/s IFD-2540I3TD	
Picture				
Key Features	1. LDPC ECC engine Internal Flash DIE RAID engine 2. End to End Data Protection Original Toshiba Industrial grade 3D TLC 3. End to End Power Protection Optional iCell		1. LDPC ECC engine Internal Flash DIE RAID engine 2. End to End Data Protection Original Toshiba Industrial grade 3D TLC 3. End to End Power Protection Stable and excellent performance Optional iCell	
Interface	SATA 6Gb/s		SATA 6Gb/s	
Flash Type	3D TLC		3D TLC	
Capacity (GB)	30GB~960GB		128GB~4TB	
Sequential R/W	560/515		530/460	
Max. Power Consumption	2.6W (5V x 525mA)		128GB~1TB 3.1W (5V x 620mA) / 2TB~4TB 6W (5V x 1.2A)	
Thermal Sensor	Yes		Yes	
ATA Security	Yes		Yes	
S.M.A.R.T	Yes		Yes	
Dimensions (mm)	69.8 x 100.0 x 6.8		69.8 x 100.1 x 7.0	
Environment	Vibration: 20G@7~2000Hz, Shock: 1500G@0.5ms, Storage Temperature: -55°C ~ +95°C, MTBF: >3 million hours			
P/N	**Standard (0°C~+70°C):** IFD-2540A3T-30GB-R10 IFD-2540A3T-60GB-R10 IFD-2540A3T-120GB-R10 IFD-2540A3T-240GB-R10 IFD-2540A3T-480GB-R10 IFD-2540A3T-960GB-R10	**Wide Temperature (-40°C~+85°C):** IFD-2540IW3T-1TB-R10 IFD-2540IW3T-512GB-R10 IFD-2540IW3T-256GB-R10 IFD-2540WI3T-128GB-R10 IFD-2540WI3T-64GB-R10 IFD-2540WI3T-32GB-R10	**Standard (0°C~+70°C):** IFD-2540I3TD-4TB-R10 IFD-2540I3TD-2TB-R10 IFD-2540I3TD-1TB-R10 IFD-2540I3TD-512GB-R10 IFD-2540I3TD-256GB-R10 IFD-2540I3TD-128GB-R10	**Wide Temperature (-40°C~+85°C):** IFD-2540IW3TD-4TB-R10 IFD-2540IW3TD-2TB-R10 IFD-2540IW3TD-1TB-R10 IFD-2540IW3TD-512GB-R10 IFD-2540IW3TD-256GB-R10 IFD-2540WI3TD-128GB-R10

Industrial CFast & CF Card Series

Similar size, different read and write speeds

With a similar size, CFast is mainly different from CF card in its interface, connector, and most importantly, faster read and write speeds. CFast, with SATA 6Gb/s interface and 7-pin plus 17-pin connector, offers data transfer rates of sequential reads up to 470 MB/sec and of sequential writes up to 250 MB/sec. CF card, with PATA interface and 50-pin CF connector, offers data transfer rates of sequential reads up to 100 MB/sec and of sequential writes up to 95 MB/sec.

ATA security for CF card

The optional ATA Security Mode feature set is a password system that restricts access to user data stored on a device. The purpose is to prevent unauthorized access or a virus.

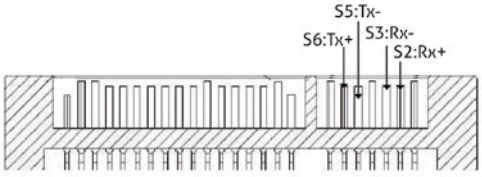

CFast 3SE: Pin Directions

Pin S6: Tx+ Pin S3: Rx-

Pin S5: Tx- Pin S2: Rx+

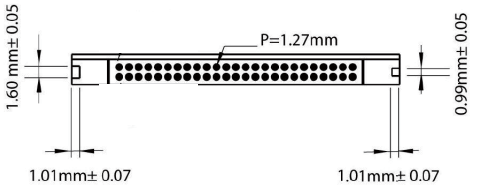

iCF9000: IDE Pin

Model Name		ICT-2000 AS	ICT-2000 AM	ICF-9000	ICF-2000	ICF-1000	
Picture							
Capacity		2GB~64GB	8GB~128GB	4GB~32GB	512MB~8GB	128MB~8GB	128MB~16GB
Sequential R/W (Max.)		285/260 MB/sec	310/240 MB/sec	110/100 MB/sec	40/30 MB/sec	40/28 MB/sec	30/15 MB/sec
Flash Type		SLC	MLC	SLC	SLC	SLC	SLC
IDE Transfer Mode		Yes	Yes	PIO mode 0-6 MwDMA mode 0-4 UltraDMA mode 0-7	PIO mode 0-4 MwDMA mode 0-4 UltraDMA mode 0-4	PIO mode 0-4 MwDMA mode 0-4 UltraDMA mode 0-4	PIO mode 0-6 MwDMA mode 0-4 UltraDMA mode 0-4
Operating Temp.		0°C~+70°C (Standard)/-40°C~+85°C (Industrial)					
Storage Temp.		-40°C~+100°C		-55°C~+95°C			-40°C~+100°C
Vibration/Shock (7/2000Hz)/(0.5ms)		Vibration: 15 (G), 10~2000 (Hz) Shock: 1,500 G, 0.5 ms		1500G/0.5ms			1500G/0.5ms
DC Power Input		Supply voltage: 3.3V		ICF: +3.3V-+5V single power supply operation			Supply voltage: 3.3V & 5V
Power Consumption (Max.)		390mA	525mA	0.75W (5V x 125mA@210mA)			95 mA
Dimensions (mm)		42.8 x 36.4 x 3.6		42.8 x 36.4 x 3.3			42.8 x 36.4 x 3.3
ATA Security		Yes	Yes	Yes	Yes	Yes	Yes
S.M.A.R.T		Yes	Yes	Yes	Yes	Yes	No
P/N	STD (0°C~+70°C)	ICT-2000IA-2GB ICT-2000IA-4GB ICT-2000IA-8GB ICT-2000IA-16GB ICT-2000IA-32GB ICT-2000IA-64GB	ICT-2000IAM-8GB ICT-2000IAM-16GB ICT-2000IAM-32GB ICT-2000IAM-64GB ICT-2000IAM-128GB	ICF-9000CD-4GB ICF-9000CD-8GB ICF-9000CD-16GB ICF-9000CD-32GB	ICF-2000IPS-512MB ICF-2000IPD-1GB ICF-2000IPD-2GB ICF-2000IPD-4GB ICF-2000IPD-8GB	ICF-1000IPD-1GB-R20 ICF-1000IPD-2GB-R20 ICF-1000IPD-4GB-R20 ICF-1000IPD-8GB-R20	ICF-1000IA-128MB-R20 ICF-1000IA-256MB-R20 ICF-1000IA-512MB-R20 ICF-1000IA-1GB-R20 ICF-1000IA-2GB-R20 ICF-1000IA-4GB-R20 ICF-1000IA-8GB-R20
	WT (-40°C~+85°C)	ICT-2000WA-2GB ICT-2000WA-4GB ICT-2000WA-8GB ICT-2000WA-16GB ICT-2000WA-32GB ICT-2000WA-64GB	ICT-2000WAM-8GB ICT-2000WAM-16GB ICT-2000WAM-32GB ICT-2000WAM-64GB ICT-2000WAM-128GB	ICF-9000WD-4GB ICF-9000WD-8GB ICF-9000WD-16GB ICF-9000WD-32GB	ICF-2000WPS-512MB ICF-2000WPD-1GB ICF-2000WPD-2GB ICF-2000WPD-4GB ICF-2000WPD-8GB	ICF-1000WPD-1GB-R20 ICF-1000WPD-2GB-R20 ICF-1000WPD-4GB-R20 ICF-1000WPD-8GB-R20	ICF-1000WA-128MB-R20 ICF-1000WA-256MB-R20 ICF-1000WA-512MB-R20 ICF-1000WA-1GB-R20 ICF-1000WA-2GB-R20 ICF-1000WA-4GB-R20 ICF-1000WA-8GB-R20

Industrial Mini PCIe DOM & mSATA Series

Co-layout design of Mini PCIe DOM and mSATA

For manufacturers or system integrators, the exciting benefit is they can have a circuit board with co-layout design of Mini PCIe DOM and mSATA. This feature allows users to enjoy wider applications by installing optional Mini PCIe DOM or mSATA in the same placement site.

Mini PCIe DOM: For conventional main board, better performance than CF card

We have realized IPC customers need a steady supply for their design-in cases by using Mini PCIe DOM or CF card as boot drive or storage. However, Mini PCIe DOM obviously has better performance in read/write over 4 times than CF card. Boasting its easy use in plug-and-play and driverless (Windows XP and above) capabilities, the Mini PCIe DOM is no doubt the best choice for the conventional motherboard. In the following table, we recommend one cost-effective MLC model and one reliable SLC model.

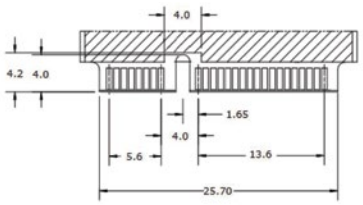

mini PCIe DOM 1ME: Pin Directions
Pin33: PETp0
Pin31: PETn0
Pin23: PERn0
Pin25: PERp0

mSATA: For space-limited main board, up to read/write speed of 470/220 MB/sec

Nowadays, more and more compact gadgets are designed to satisfy eager users. Smaller than a business card, the mSATA has become the must-have storage to deliver instant data transfer.

In the following table, we recommend five models categorized by the flash type and size.

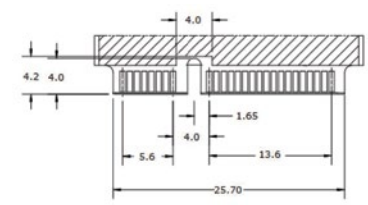

mSATA 3SE: Pin Directions
Pin33: Rx+
Pin31: Rx-
Pin23: Tx+
Pin25: Tx-

Model Name		IPE-5300IM/WM	IPE-5321IM/IWM	IPE-5330A3T/AW3T	IPE-5330-A2M/AW2M	IPE-5200IP/WP	IPE-5210IPM/WPM
Picture							
Key Features		1. Excellent data transfer speed 2. High quality SLC-based solution	1. Excellent data transfer speed and IOPS 2. Budget-Friendly MLC-based solution	1. SATA III solution for industrial field 2. High IOPS 3. DEVSLP supported	1. Excellent data transfer speed and IOPS 2. Budget- friendly MLC-based solution	1. PCI Express interface 2. Driverless 3. Multi OS supported	1. PCI Express interface 2. Driverless 3. Multi OS supported
Interface		SATA 6Gb/s	SATA 6Gb/s	SATA 6Gb/s	SATA 6Gb/s	PCI Express Gen 1 x1	PCI Express Gen 1 x1
Flash Type		SLC	MLC	TLC	MLC	SLC	MLC
Capacity (GB)		2GB~32GB	8GB~256GB	30GB~960GB	32GB~512GB	4GB~64GB	8GB~256GB
Sequential R/W		470/250	530/210	510/480	560/510	170/120	130/100
Max.Power Consumption		1.2W (3.3V x 360mA)	0.6W (3.3V x 0.2A)	1.7W (3.3V x 540 mA)	3W (3.3V x 935mA)	1.2W (3.3V x 370mA)	1.2W (3.3V x 370mA)
Thermal Sensor		Wide temperature model only	Yes	Yes	Yes	Wide temperature model only	Wide temperature model only
ATA Security		Yes	Yes	Yes	Yes	Yes	Yes
S.M.A.R.T		Yes	Yes	Yes	Yes	Yes	Yes
Dimensions (mm)		29.8 x 50.8 x 4.4	29.85 x 50.8 x 3.7	29.85 x 50.8 x 3.7	29.8 x 50.8 x 4.4	30 x 50.95 x 4.4	30 x 50.95 x 4.4
Environment		Vibration: 20G@7~2000Hz, Shock: 1500G@0.5ms, Storage Temperature: -55°C ~ +95°C, MTBF: >3 million hours					
P/N	Standard (0°C~+70°C)	IPE-5300IM-1GB IPE-5300IM-2GB IPE-5300IM-4GB IPE-5300IM-8GB IPE-5300IM-16GB IPE-5300IM-32GB	IPE-5321IM-8GB-R10 IPE-5321IM-16GB-R10 IPE-5321IM-16GB-R10 IPE-5321IM-32GB-R10 IPE-5321IM-64GB-R10 IPE-5321IM-128GB-R10 IPE-5321IM-256GB-R10	IPE-5330A3T-30GB-R10 IPE-5330A3T-60GB-R10 IPE-5330A3T-120GB-R10 IPE-5330A3T-240GB-R10 IPE-5330A3T-480GB-R10 IPE-5330A3T-960GB-R10	IPE-5330A2M-32GB-R10 IPE-5330A2M-64GB-R10 IPE-5330A2M-128GB-R10 IPE-5330A2M-256GB-R10 IPE-5330A2M-512GB-R10	IPE-5200IP-4G-R21 IPE-5200IP-8G-R21 IPE-5200IP-16G-R21 IPE-5200IP-32G-R21 IPE-5200IP-64G-R21	IPE-5210IPM-8GB-R10 IPE-5210IPM-16GB-R10 IPE-5210IPM-32GB-R10 IPE-5210IPM-64GB-R10 IPE-5210IPM-128GB-R10 IPE-5210IPM-256GB-R10
	Wide Temperature (-40°C~+85°C)	IPE-5300WM-1GB IPE-5300WM-2GB IPE-5300WM-4GB IPE-5300WM-8GB IPE-5300WM-16GB IPE-5300WM-32GB	IPE-5321IWM-8GB-R10 IPE-5321IWM-16GB-R10 IPE-5321IWM-16GB-R10 IPE-5321IWM-32GB-R10 IPE-5321IWM-64GB-R10 IPE-5321IWM-128GB-R10 IPE-5321IWM-256GB-R10	IPE-5330AW3T-30GB-R10 IPE-5330AW3T-60GB-R10 IPE-5330AW3T-120GB-R10 IPE-5330AW3T-240GB-R10 IPE-5330AW3T-480GB-R10 IPE-5330AW3T-960GB-R10	IPE-5330AW2M-32GB-R10 IPE-5330AW2M-64GB-R10 IPE-5330AW2M-128GB-R10 IPE-5330AW2M-256GB-R10 IPE-5330AW2M-512GB-R10	WPE-5200WP-4G-R21 WPE-5200WP-8G-R21 WPE-5200WP-16G-R21 WPE-5200WP-32G-R21 WPE-5200WP-64G-R21	IPE-5210WPM-8GB-R10 IPE-5210WPM-16GB-R10 IPE-5210WPM-32GB-R10 IPE-5210WPM-64GB-R10 IPE-5210WPM-128GB-R10 IPE-5210WPM-256GB-R10

M.2 SATA III

M.2, formerly known as the Next Generation Form Factor (NGFF), M.2's more flexible physical specification allows different module widths and lengths, and, paired with the availability of more advanced interfacing features, makes the M.2 more suitable than mSATA for solid-state storage applications in general and particularly for the use in small system.

Features

- Adopted SATA 6Gb/s interface, complaint with M.2 (NGFF) type 2242 and 2280
- Excellent data transfer speed in small form factor
- iCell technology for data protection
- Supports iSMART disk health monitoring

Benefits

- The small form factor of M.2 (S42) saves about 40% of PCB dimension, comparing to the Mini PCIe form factor
- Innodisk's exclusive iData Guard ensures reliable data transfer in the event of an abnormal power failure
- Fully compliant with industrial standard
- Suitable for ultra-thin or compact system

M.2 form factor used on SSD

- Key A version is intended to support Wi-Fi+BT+NFC and/or WiGig Combo solution
- Key B is intended to support WWAN+GNSS, SSD and other add-in solutions
- Key E is intended to support Wi-Fi+BT+NFC or GNSS solution
- Key M is intended for SSD devices only

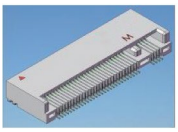
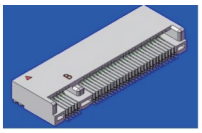
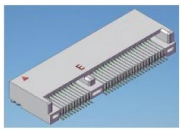

Model Name	IM2SE-2242IM	IM2SE-2280I2M	IM2SE-2242I3T	IM2SE-2280I3T	IM2SE-2242I3TD	IM2SE-2280I3TD
Picture						
Type	2242-D2-B-M	2280-D2-B-M	2242-D2-B-M	2280-D2-B-M	2242-D2-B-M	2280-D2-B-M
Key Features	1. Design with LDPC ECC engine 2. Budget-Friendly MLC-based solution		1. Truly industrial optimized firmware with 3D NAND flash 2. Advanced LDPC ECC engine 3. Internal RAID Technology 4. DRAM-less , high level data integrity 5. Excellent data transfer speed		1. Extreme SEQ and random performance 2. Advanced LDPC ECC engine 3. Flash DIE RAID function 4. AES 256 5. End to End data path protection	
Interface	SATA 6Gb/s	SATA 6Gb/s	SATA 6Gb/s	SATA 6Gb/s	SATA 6Gb/s	SATA 6Gb/s
Flash Type	MLC	MLC	3D TLC	3D TLC	3D TLC	3D TLC
Capacity (GB)	8GB~256GB	32GB~1TB	32GB~512GB	32GB~1TB	128GB~512GB	128GB~1TB
Sequential R/W	530/210	530/450	530/210	520/210	550/340	540/500
Max. Power Consumption	1.4W (3.3V x 422 mA)	4.6W (3.3V x 1.4A)	1.6W (3.3V x 475 mA)	2.0W (3.3V x 614 mA)	2.4W (3.3V x 740 mA)	2.6W (3.3V x 800 mA)
Thermal Sensor	Yes	Yes	Yes	Yes	Yes	Yes
ATA Security	Yes	Yes	Yes	Yes	Yes	Yes
S.M.A.R.T	Yes	Yes	Yes	Yes	Yes	Yes
Dimensions (mm)	22.0 x 42.0 x 3.2	22.0 x 80.0 x 3.5	22.0 x 42.0 x 3.2	22.0 x 80.0 x 3.2	69.8 x 100.0 x 6.8	22.0 X 80.0 X 3.0
Environment	Vibration: 20G@7~2000Hz, Shock: 1500G@0.5ms, Storeage Temperature: -55°C ~ +95°C, MTBF: >3 million hours					
P/N Standard (0°C~+70°C)	IM2SE-2242IM-256GB-R10 IM2SE-2242IM-128GB-R10 IM2SE-2242IM-64GB-R10 IM2SE-2242IM-32GB-R10 IM2SE-2242IM-16GB-R10 IM2SE-2242IM-8GB-R10	IM2SE-2280I2MD-1TB-R10 IM2SE-2280I2MD-512GB-R10 IM2SE-2280I2MD-256GB-R10 IM2SE-2280I2MD-128GB-R10 IM2SE-2280I2MD-64GB-R10 IM2SE-2280I2MD-32GB-R10	IM2SE-2242I3T-512GB-R10 IM2SE-2242I3T-256GB-R10 IM2SE-2242I3T-128GB-R10 IM2SE-2242I3T-64GB-R10 IM2SE-2242I3T-32GB-R10	IM2SE-2280I3T-1TB-R10 IM2SE-2280I3T-512GB-R10 IM2SE-2280I3T-256GB-R10 IM2SE-2280I3T-128GB-R10 IM2SE-2280I3T-64GB-R10 IM2SE-2280I3T-32GB-R10	IM2SE-2242I3TD-512GB-R10 IM2SE-2242I3TD-256GB-R10 IM2SE-2242I3TD-128GB-R10	IM2SE-2280I3TD-1TB-R10 IM2SE-2280I3TD-512GB-R10 IM2SE-2280I3TD-256GB-R10 IM2SE-2280I3TD-128GB-R10
P/N Wide Temperature (-40°C~+85°C)	IM2SE-2242WM-256GB-R10 IM2SE-2242WM-128GB-R10 IM2SE-2242WM-64GB-R10 IM2SE-2242WM-32GB-R10 IM2SE-2242WM-16GB-R10 IM2SE-2242WM-8GB-R10	IM2SE-2280IW2MD-1TB-R10 IM2SE-2280IW2MD-512GB-R10 IM2SE-2280IW2MD-256GB-R10 IM2SE-2280IW2MD-128GB-R10 IM2SE-2280IW2MD-64GB-R10 IM2SE-2280IW2MD-32GB-R10	IM2SE-2242IW3T-512GB-R10 IM2SE-2242IW3T-256GB-R10 IM2SE-2242IW3T-128GB-R10 IM2SE-2242IW3T-64GB-R10 IM2SE-2242IW3T-32GB-R10	IM2SE-2280IW3T-1TB-R10 IM2SE-2280IW3T-512GB-R10 IM2SE-2280IW3T-256GB-R10 IM2SE-2280IW3T-128GB-R10 IM2SE-2280IW3T-64GB-R10 IM2SE-2280IW3T-32GB-R10	IM2SE-2242IW3TD-512GB-R10 IM2SE-2242IW3TD-256GB-R10 IM2SE-2242IW3TD-128GB-R10	IM2SE-2280IW3TD-1TB-R10 IM2SE-2280IW3TD-512GB-R10 IM2SE-2280IW3TD-256GB-R10 IM2SE-2280IW3TD-128GB-R10

M.2 PCIeIII

M.2 SSD is an NVM Express DRAM-less SSD designed as the standard M.2 form factor with PCIe interface. M.2 SSD supports PCIe Gen III x2, and it is compliant with NVM 1.3 providing excellent performance. Moreover, it adopts industrial grade NAND Flash which provides high endurance and reliability. With sophisticated error detection and correction (ECC) functions, the module can ensure full End-to-end Data Path Protection that secures the data transmission between the host system and NAND flash.

Features

- PCIe Gen. III x2, NVMe 1.3
- Anti-vibration mechanical design
- LDPC ECC engine supported.
- End-to-end Data Path Protection
- iCell supported

Benefits

- Excellent data transfer speed
- Zero mechanical interference
- Enhanced power failure protection
- Native PCIe device without driver in needed.

Model Name		IPE-G32-2242I2M	IPE-G32-2280I2M	IPE-G32-2242I3T	IPE-G32-2280I3T
Picture					
Key Features		1. Type 2242-D2-B-M 2. Heat-less controller chip 3. Support NVM3 v1.3 4. End-to-End data path protection 5. iDATA guard power protection	1.Type 2280-D2-B-M 2. Heat-less controller chip 3. Support NVM3 v1.3 4. End-to-End data path protection 5. iDATA guard power protection	1. Dram-Less solution 2. Heat-less controller chip 3. Support NVM3 v1.3 4. End-to-End data path protection	1. Dram-Less solution 2. Heat-less controller chip 3. Support NVM3 v1.3 4. End-to-End data path protection
Interface		PCIe Gen. III x2	PCIe Gen. III x2	PCIe Gen. III x2	PCIe Gen. III x2
Flash Type		MLC	MLC	3D TLC	3D TLC
Capacity (GB)		32GB~256GB	32GB~512GB	64GB~512GB	64GB~1TB
Sequential R/W		1300/360	1300/490	1300/680	1300/680
Max. Power Consumption		2.9W (3.3V x 880mA)	3.72W (3.3 x 1130mA)	2.31W(3.3V x 700mA)	3W(3.3V x 910mA)
Thermal Sensor		Yes	Yes	Standard: Yes, Wide Temperature: Yes	Standard: Yes, Wide Temperature: Yes
ATA Security		Yes	No	No	No
S.M.A.R.T		Yes	Yes	Yes	Yes
Dimensions (mm)		22.0 x 42.0 x 3.5	22.0 x 80.0 x 3.5	22.0 x 42.0 x 3.5	22.0 x 80.0 x 3.5
Environment		Vibration: 20G@7~2000Hz, Shock: 1500G@0.5ms, Storeage Temperature: -55°C ~ +95°C, MTBF: >3 million hours			
P/N	Standard (0°C~+70°C)	IPE-G32-2242I2M-256GB-R10 IPE-G32-2242I2M-128GB-R10 IPE-G32-2242I2M-64GB-R10 IPE-G32-2242I2M-32GB-R10	IPE-G32-2280I2M-512GB-R10 IPE-G32-2280I2M-256GB-R10 IPE-G32-2280I2M-128GB-R10 IPE-G32-2280I2M-64GB-R10 IPE-G32-2280I2M-32GB-R10	IPE-G32-2242I3T-512GB-R10 IPE-G32-2242I3T-256GB-R10 IPE-G32-2242I3T-128GB-R10 IPE-G32-2242I3T-64GB-R10	IPE-G32-2280I3T-1TB-R10 IPE-G32-2280I3T-512GB-R10 IPE-G32-2280I3T-256GB-R10 IPE-G32-2280I3T-128GB-R10 IPE-G32-2280I3T-64GB-R10
	Wide Temperature (-40°C~+85°C)	IPE-G32-2242IW2M-256GB-R10 IPE-G32-2242IW2M-128GB-R10 IPE-G32-2242IW2M-64GB-R10 IPE-G32-2242IW2M-32GB-R10	IPE-G32-2280IW2M-512GB-R10 IPE-G32-2280IW2M-256GB-R10 IPE-G32-2280IW2M-128GB-R10 IPE-G32-2280IW2M-64GB-R10 IPE-G32-2280IW2M-32GB-R10	IPE-G32-2242IW3T-512GB-R10 IPE-G32-2242IW3T-256GB-R10 IPE-G32-2242IW3T-128GB-R10 IPE-G32-2242IW3T-64GB-R10	IPE-G32-2280IW3T-1TB-R10 IPE-G32-2280IW3T-512GB-R10 IPE-G32-2280IW3T-256GB-R10 IPE-G32-2280IW3T-128GB-R10 IPE-G32-2280IW3T-64GB-R10

Intel® 2.5" SSD Solution



Key Features	1. 7mm height mechanical design 2. Low power consumption	Max. Power Consumption	165mw (5V*33mA)
Interface	SATA 6Gb/s	Thermal Sensor	0° C~70°C
Flash Type	MLC	ATA Security	Yes
Capacity (GB)	60GB~480GB	S.M.A.R.T	Yes
Sequential R/W	540/490	Dimensions (mm)	70 x 100 x 7
Environment	Vibration: 2.17 G@5-700 Hz, Shock: 1500G@0.5ms, Storeage Temperature: 0° C~70° C, MTBF: ≥1.2 million hours		

Ensuring the Best System Performance

IEI provide complete product line of industrial

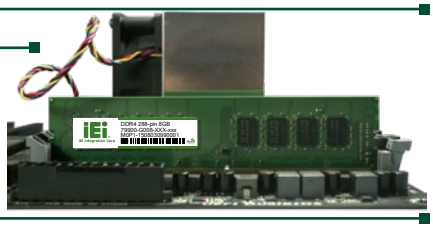

Features

- Refresh ➔ TREFI=7.8ms from -40°C~+85°C
- 30μ" Gold Finger
- Stern Test of Parameter
- High Reliability

DDR4 DIMM

Features

- Low Power
- Major on Third
- Thermal Sensor Design Ready
- 100% System Level Test

DDR4 DIMM

Module Speed	DIMM	SO-DIMM	CAS Latency
2133 MHz	288-pin	260-pin	CL13

■ SO-DIMM



■ Long-DIMM

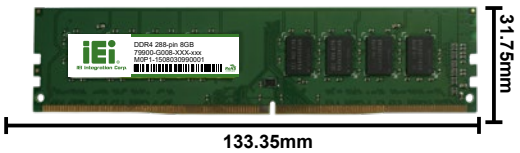

Ordering Information

	Description
DDR4 SO-DIMM	DDR4 2400 4GB SO-DIMM CL17 512M*8
	DDR4 2400 8GB SO-DIMM CL17 512M*8
	DDR4 2400 8GB SO-DIMM CL17 1G*8
	DDR4 2400 16GB SO-DIMM CL17 1G*8
	DDR4 2666 4GB SO-DIMM CL17 512M*8
	DDR4 2666 8GB SO-DIMM CL17 512M*8
	DDR4 2666 8GB SO-DIMM CL17 1G*8
	DDR4 2666 16GB SO-DIMM CL17 1G*8

	Description
DDR4 Long-DIMM	DDR4 2400 4GB Long-DIMM CL17 512M*8
	DDR4 2400 8GB Long-DIMM CL17 512M*8
	DDR4 2400 8GB Long-DIMM CL17 1G*8
	DDR4 2400 16GB Long-DIMM CL17 1G*8
	DDR4 2666 4GB Long-DIMM CL17 512M*8
	DDR4 2666 8GB Long-DIMM CL17 512M*8
	DDR4 2666 8GB Long-DIMM CL17 512M*8
	DDR4 2666 16GB Long-DIMM CL17 1G*8

DDR3 W/T & Commercial ECC Thermal Sensor Solution

Module Speed	1600 MHz
DIMM	240-pin
SO-DIMM	204-pin
CAS Latency	CL11

DDR3 ECC SO-DIMM

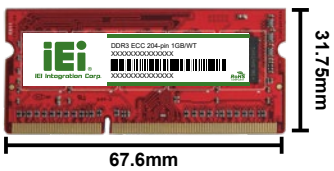

DDR3 ECC Long-DIMM



Ordering Informtion

	Description
DDR3 SO-DIMM W/T	DDR3 1600 1GB ECC SO-DIMM CL11 128M*8
	DDR3 1600 2GB ECC SO-DIMM CL11 256M*8
	DDR3 1600 4GB ECC SO-DIMM CL11 256M*8
	DDR3 1600 8GB ECC SO-DIMM CL11 256M*8

	Description
DDR3 DIMM W/T	DDR3 1600 2GB DIMM CL11 256M*8
	DDR3 1600 4GB DIMM CL11 256M*8
	DDR3 1600 8GB DIMM CL11 256M*8
	DDR3 1600 16GB DIMM CL11 256M*8

DDR3 W/T Solution

Module Speed	1600 MHz
DIMM	240-pin
SO-DIMM	204-pin
CAS Latency	CL11

DDR3 SO-DIMM



DDR3 Long-DIMM



Ordering Information

	Description
DDR3 SO-DIMM W/T	DDR3 1600 1GB SO-DIMM, ProMOS, 128M*8
	DDR3 1600 2GB SO-DIMM, ProMOS, 128M*8
	DDR3 1600 2GB SO-DIMM, Micron, 256M*8
	DDR3 1600 4GB SO-DIMM, Micron, 256M*8
	DDR3 1600 4GB SO-DIMM, ProMOS, 512M*8
	DDR3 1600 8GB SO-DIMM, ProMOS, 512M*8

	Description
DDR3 DIMM W/T	DDR3 1600 2GB DIMM, ProMOS, 128M*8
	DDR3 1600 2GB DIMM, Micron, 256M*8
	DDR3 1600 4GB DIMM, Micron, 256M*8
	DDR3 1600 4GB DIMM, ProMOS, 512M*8
	DDR3 1600 8GB DIMM, ProMOS, 512M*8

DDR2 W/T Solution

Module Speed	800 MHz
DIMM	240-pin
SO-DIMM	200-pin
CAS Latency	CL6

DDR2 SO-DIMM

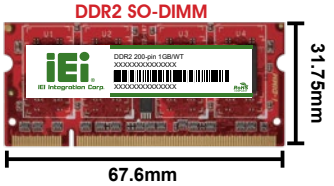

DDR2 DIMM (Low Profile)

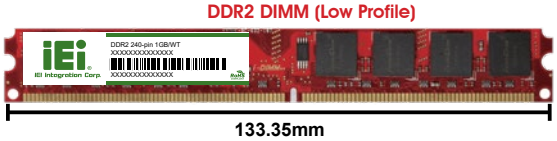

Ordering Information

	Description
DDR2 SO-DIMM W/T	DDR2 667 1GB SO-DIMM, ProMOS, 128M*8
	DDR2 800 1GB SO-DIMM, ProMOS, 128M*8
	DDR2 800 2GB SO-DIMM, ProMOS, 128M*8

	Description
DDR2 DIMM W/T	DDR2 800 1GB DIMM, ProMOS, 128M*8
	DDR2 800 2GB DIMM, ProMOS, 128M*8
DDR SO-DIMM W/T	Description
	DDR400 1GB SO-DIMM, ProMOS, 64M*8

Lifespan Evaluation of Flash Products From Endurance to iSMART

Endurance of different flash types - SLC and MLC

SLC is more reliable and has longer endurance than MLC.

MLC is cost-saving alternative to SLC to replace the traditional HDD.

iSMART, the proprietary disk health monitoring tool, provides easy access, in-depth information for embedded applications

iSMART can monitor all our flash products in a system. It provides clear and easy to understand warnings, numbers, charts and graphics to enable system integrators and users to check storage device health, performance, temperature, free space, and status at a glance. Also, it can alert users with the remaining service lifetime of Innodisk drives, so that they can replace a device in plenty of time to avoid any potential issues.

Besides providing critical disk information, iSMART also offers convenience through e-mail alerts and one-touch feature. Additionally, iSMART provides dynamic power management, advancing green design goals for lower power consumption, such as with a 35% of power saving in idle mode.

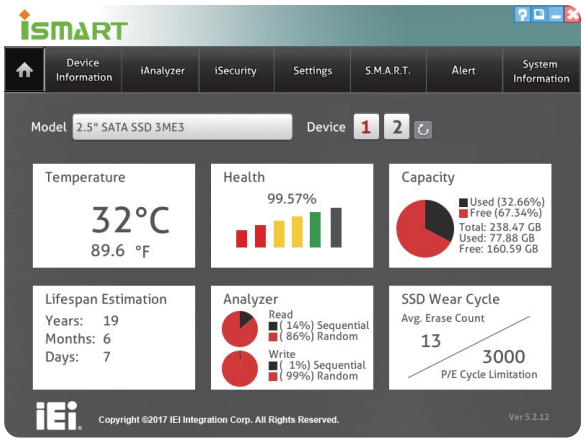

Dashbord

The Dashboard's home tab aims to provide a summary or quick snapshot of each installed disks in the system. This page offers accurate data information regarding Temperature, Health, Capacity, Lifespan, iAnalyzer, and Notifications.

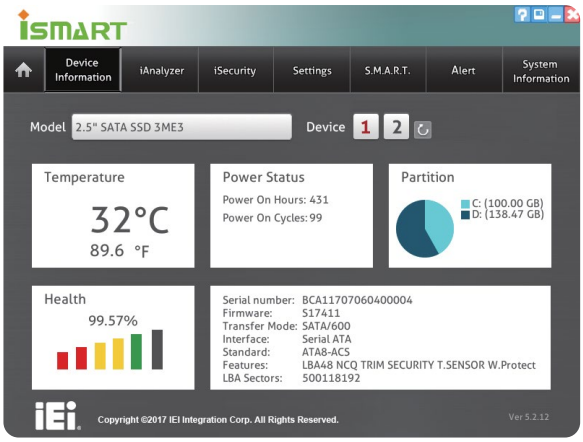

Device Information

The Device Information page provides additional functions, such as Power Status, Partitions, and detailed information of the device such as Serial Number, Firmware Vision, Interface, and Features. To learn more about SMART information, go to SMART values and refer to the SMART tab.

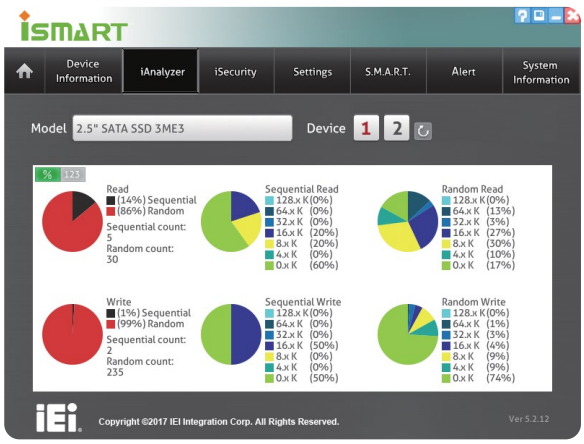

iAnalyer

When activated, the iAnalyzer tab displays the read/write behaviors of the SSD in real time. This allows the user to understand their application usage of the SSD. Sequential and Random I/Os are easily broken down into percentages making them easy to read.

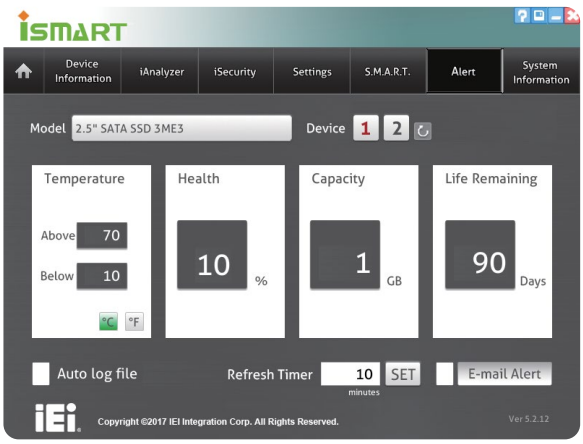

Alert

The Alert tab helps the user set trigger points with Temperature, Health percentage, Remaining Capacity or Life Remaining. If these trigger points exceed their boundaries, the iSMART utility can send a warning and email to the user notifying them that something may fail.

Drive Cage

Standard 3.5" Device in 5.25" Drive Bay Solutions

Following the traditional industrial system needs for stability, durability and toughness for storage drive operating condition, IEI provides various kinds of standard 3.5" device in 5.25" removable drive bay and modules for different demands.

	SATA / IDE / SSD Solution		SATA Solution	
				
Model Name	**XWC-410030507220-RS**	**XWC-410030507230-RS**	**RD-03A-R20**	**RHD-302SATA-R20**
Dimensions (L x W x H) (mm)	150 x 146 x 42	150 x 146 x 42	186 x 146 x 42	202 x 146 x 86
Material	Aluminum	Aluminum	Aluminum alloy	Aluminum alloy
Interface	SATA / IDE / SSD	SATA / IDE / SSD	SATA III / SAS 2.0	SATA III / SAS 2.0
Data Transfer Rate			SAS 2.0 / SATA III 6Gbps	SAS 2.0 / SATA III 6Gbps
Drive Bay Space	One 5.25" drive bay	One 5.25" drive bay	1 x 5.25" Device Bay for 1 x 2.5" or 3.5" Hard Drive	2 x 5.25" Device Bay for 3 x 2.5" or 3.5" Hard Drive
HDD Type	Internal 3.5" device bay	Internal 3.5" device bay	2.5" or 3.5" Hard Drive	2.5" or 3.5" Hard Drive
Cooling Fan			8CM	8 cm
Hot Swap	No	No	Yes	Yes
Keylock	No	No	No	No
Signal Out	No	No	SATA III 7-Pin	SATA III 7-Pin
Color	Black	White	Black	Black
Gross Weight	0.2 kg	0.2 kg	0.85kg	1.3kg

	SATA Solution			
				
Model Name	**RHD-102SATA-R20**	**RHD-102DW-R20**	**RHD-101SATA-R20**	**RHD-104SATA-R20**
Dimensions (L x W x H) (mm)	140 x 101.6 x 25	153 x 146 x 42	140 x 101.6 x 25	149.6 x 146 x 42.1
Material	Aluminum & SPCC	Aluminum	Aluminum & SPCC	Full Metal
Interface	SATA 7 + 15 Pin	SATA	SATA 7 + 15 Pin	SATA III
Data Transfer Rate	up to 6Gb/Sec	up to 6Gb/Sec	Up to 6Gb/Sec	SATA III 6Gbps
Drive Bay Space	One 3.5" drive bay	One 5.25" drive bay	One 3.5" drive bay	1 x 5.25" Device Bay for 4 x 2.5" Hard Drive
HDD Type	2.5" SATA/SAS 2 x HDD/SSD	2.5" SATA 2 x HDD/SSD	2.5" SATA/SAS 1 x HDD/SSD	2.5" Hard Drive
Cooling Fan	No	Yes	No	4CM
Hot Swap	Yes	Yes	Yes	Yes
Keylock	Yes	Yes	Yes	Yes
Signal Out	SATA 7 Pin	SATA 7 Pin	SATA 7 Pin	SATA III 7-Pin
Color	Black	Black	Black	Black
Gross Weight	0.304 Kg	0.534 Kg	0.236 Kg	0.56kg

FCD-301



Pin 1	Pin 2	Pin 3	Pin 4
+5V	Data-	Data+	GND

3.5" compact drive bay with USB port

- The most suitable USB cable for IEI's CPU boards
- Support standard 3.5" drive bay, 4-pin female connector to CPU boards' pin header, length: 60cm
- RoHS compliant
- Pin definition

Ordering Information

Part No.	Description
FCD-301[C]-RS	3.5" compact drive bay with USB port, RoHS Color Code: B=Black, W=White

AS-35A / AS-25A / AS-25C



AS-35A AS-25A

Anti-vibration Drive Kit



AS-25C

- Resistant to shocks and vibrations from all directions
- Support 2.5" HDD into 3.5" drive bay (AS-25A/ 25C)
  Support 3.5" HDD into 5.25" drive bay (AS-35A)
- Meets the following standards:
  - » MIL-SLD-810F 514.5C-1 standard
  - » 5-20Hz, 1G peak to peak
  - » 60-200Hz, 3G peak to peak
- RoHS compliant

Ordering Information

Part No.	Description
AS-35A-RS	3.5" drive anti-vibration kit, RoHS
AS-25A-RS	2.5" drive anti-vibration kit, RoHS
AS-25C-RS	Enhanced 2.5" drive anti-vibration kit, RoHS

Industrial Keyboard Series

MK-KTP5A



Model Name	MK-KTP5AW-R20		
Key Number	105-key	Color	White
Mouse	Touchpad	Waterproof	NA
Connector	2 x PS/2 for KB/MS	Dimensions (mm)	482 (D) x 380 (W) x 44 (H)

Ordering Information

Part No.	Description
MK-KTP5AW-R20	1U rackmount keyboard/touchpad drawer, RoHS

Cables and Connectors *HDMI / HDD / FDD / Serial Cable*

	HDMI Cable	SATA HDD Cable		
	New 			
Model Name	**19B00-000403-00-RS**	**32801-000703-400-RS**	**32102-000100-100-RS**	**32000-080700-RS**
Cable Type	HDMI Cable	SATA HDD cable	SATA power cable	SATA + Power cable
Connector	HDMI 90°	SATA 7-pin	4-pin + 2 x SATA 15-pin	SATA 7-pin + 4-pin
Connector Type	HDMI	Lockable	SATA power connector	
Length	35 cm	50 cm	15 cm	SATA cable 20 cm Power cable 10 cm

	SATA HDD Cable		IDE HDD Cable	
				
Model Name	**32801-000201-300-RS**	**32801-000100-300-RS**	**CB-HD32-RS**	**32200-000009-RS**
Cable Type	SATA + Power cable	SATA + Power cable	IDE HDD flat cable	IDE HDD flat cable
Connector	SATA 7-pin + 2-pin wafer (P=2 mm)	SATA 7-pin + 4-pin wafer (P=2.54 mm)	40p-44p	44p-44p
Connector Type	2-pin PH 2.0	4-pin PH 2.54 mm	2.54mm-2.0mm	2.0mm -2.0mm
Length	SATA cable 15 cm Power cable 15 cm	SATA cable 20 cm Power cable 20 cm	IDE cable: 39 cm Power cable: 20 cm	40 cm

	Serial cable			
				
Model Name	**45002-008103-RS**	**19800-000300-100-RS**	**19800-010900-200-RS**	**19800-000051-RS**
Cable Type	Serial port	Serial port cable	Serial port cable	Serial port cable
Board Side	N/A	10-pin (2x5) connector (2.0 mm)	10-pin (2x5) connector (2.54 mm)	2 x 10-pin (2x5) connector (2.54 mm)
Board Side Pitch	2.54 mm	2.0 mm	2.54 mm	2.54 mm
Device Side	2 x DE9M	DE9M	DE9M	2 x DE9M
Bracket	Yes	Yes	Yes	Yes
Length	9 cm	30 cm	50 cm	23 cm

Part numbers listed in the product catalog are for reference purposes. IEI reserves the right to implement substitution parts when the function is not affected.

Cables and Connectors *Paralle / Serial Cable*

	Serial cable			
				
Model Name	**19800-003600-100-RS**	**19800-000112-RS**	**32205-000702-100-RS**	**32200-000049-RS**
Cable Type	Serial port cable	Serial port cable	Serial port cable	Serial port cable
Board Side	2 x 10-pin (2x5) connector (2.54mm)	2 x 10-pin (2x5) connector (2.0 mm)	10-pin (2x5) connector (2.54 mm)	10-pin (2x5) connector (2.0 mm)
Board Side Pitch	2.54 mm	2.0 mm	2.54 mm	2.0 mm
Device Side	2 x DE9M	2 x DE9M	DE9M	DE9M
Bracket	Yes	Yes	No	No
Length	40 cm	30 cm	23 cm	20 cm

	Serial cable		
			
Model Name	**32205-001203-200-RS**	**32200-025401-RS**	**19800-004400-200-RS**
Cable Type	Serial port cable	Serial port cable	RS-232 & RS-422/485 cable
Board Side	40-pin (2x20) connector (2.54 mm)	40-pin (2x20) connector (2.0 mm)	14-pin (2x7) connector (2.54 mm)
Board Side Pitch	2.54 mm	2.0 mm	2.54 mm
Device Side	4 x DE9M	4 x DE9M	2 x DE9M
Bracket	No	No	Yes
Length	40/40/40/40 cm	30 cm	25.5 cm

	Serial cable		
			
Model Name	**19800-004300-100-RS**	**32200-026500-RS**	**32205-003800-300-RS**
Cable Type	RS-232 & RS-422/485 cable	RS-232 & RS-422/485 cable	RS-422/485 cable
Board Side	14-pin (2x7) connector (2.0 mm)	14-pin (2x7) connector (2.0 mm)	4-pin (1x4) connector (2.0 mm)
Board Side Pitch	2.0 mm	2.0 mm	2.0 mm
Device Side	2 x DE9M	2 x DE9M	DE9M
Bracket	Yes	No	No
Length	25 cm	29 cm	20 cm

	Paralle cable		
			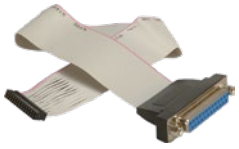
Model Name	**19800-000049-RS**	**19800-003500-100-RS**	**32223-000700-100-RS**
Cable Type	Parallel port cable	Parallel and serial port cable	Parallel port cable
Board Side	26-pin (2x13) connector (2.54 mm)	26-pin (2x13) connector (2.0 mm) 10-pin (2x5) connector (2.0 mm)	26-pin (2x13) connector (2.0 mm)
Board Side Pitch	2.54 mm	2.0 mm	2.0 mm
Device Side	DB25F	DB25F + DE9M	DB25F
Bracket	Yes	Yes	No
Length	24 cm	24 cm	28 cm

Part numbers listed in the product catalog are for reference purposes. IEI reserves the right to implement substitution parts when the function is not affected.

Cables and Connectors *USB / Keyboard / Mouse / Power Cable*

	USB cable			
				
Model Name	**32001-010800-100-RS**	**32001-006404-100-RS**	**19800-000100-200-RS**	**19800-003100-300-RS**
Cable type	USB able	USB cable	USB cable	USB cable
Board side	2 x 4-pin connector (2.54 mm)	2 x 4-pin connector (2.0 mm)	2 x 8-pin (2x4) connector (2.54 mm)	2 x 4-pin (1x4) connector (2.54 mm)
Board side pitch	2.54 mm	2.00 mm	2.54 mm	2.54 mm
Device side	2 x USB	2 x USB	4 x USB	2 x USB
Bracket	No	No	Yes	Yes
Length	20 cm	22 cm	30 cm	30 cm

	USB cable			Power cable
				
Model Name	**CB-USB02A-RS**	**32000-044300-RS**	**32001-008600-200-RS**	**32100-087100-RS**
Cable type	USB cable	USB cable	USB cable	12V power cable
Board side	1 x 8-pin (2x4) connector (2.0 mm)	1 x 8-pin (2x4) connector (2.54 mm)	1 x 8-pin (2x4) connector (2.0 mm)	1 x 4-pin (2x2) connector
Board side pitch	2.0 mm	2.54 mm	2.0 mm	
Device side	2 x USB	2 x USB	2 x USB	2 x 4-pin (1x4) molex
Bracket	Yes	No	No	No
Length	30 cm	21 cm	21 cm	13 cm

	Keyboard / Mouse cable			
				
Model Name	**19800-000066-RS**	**19800-000075-RS**	**32006-000300-100-RS**	**32006-001100-201-RS**
Cable type	Keyboard and mouse cable	Y-Cable	Y-Cable	Y-Cable
Board side	2 x 5-pin (1x5) connector (2.54 mm)	1 x 6-pin (1x6) connector (2.0 mm)	1 x male PS/2	1 x 6-pin (1x6) connector (2.0 mm)
Board side pitch	2.54 mm	2.0 mm		2.0 mm
Device side	2 x Female PS/2	2 x Female PS/2	2 x Female PS/2	2 x Female PS/2
Bracket	Yes	Yes	No	No
Length	30 cm	22 cm	12 cm (KB) + 14 (MS)	13 cm

Part numbers listed in the product catalog are for reference purposes. IEI reserves the right to implement substitution parts when the function is not affected.

Cables and Connectors *Audio / LAN*

	Audio cable			Bracket
				New 
Model Name	**19800-000111-RS**	**32007-002600-100-RS**	**32000-028800-RS**	**45002-0081C0-00-RS**
Cable type	Audio cable	Audio cable	Audio cable	COM port bracket
Board side	10-pin (2x5) connector (2.0 mm)	10-pin (2x5) connector (2.0 mm)	12-pin (2x6) connector (2.54 mm)	-
Board side pitch	2.0 mm	2.0 mm	2.54 mm	-
Device side	3 x Audio jacks	3 x Audio jacks	4 x Audio jacks	-
Bracket	Yes	No	No	Yes
Length	30 cm	30 cm	25 cm	-

Part numbers listed in the product catalog are for reference purposes. IEI reserves the right to implement substitution parts when the function is not affected.

Rackmount Slide *Optional Chassis Accessories*

	SLIDE
	
Model Name	**SLIDE-18**
Specification	18" rackmount slide
Description	For rackmount chassis w/ depth up to 500

DIN Rail Kit

	KIT		
	New 		
Model Name	**DK-75-R10**	**DK-100-R10**	**DK-84MB**
Specification	850 mm (W) x 75mm (D)	110 mm (W) x 100 mm (D)	168 mm (W) x 96 mm (D)
Description	VESA 75 to DIN-rail kit	VESA 100 to DIN-rail kit	DIN mount kit for ECW-281 series, black, RoHS

V-STAND

VESA Multi-Mounting Stand

IEI patented multi-mounting V-Stand allows wall, ceiling, desk, rear and side mounting to meet diverse applications. Its 0° to 90° adjustable hinge design provides optimal viewing in various environment, such as kitchen, room or shelf.

VESA	Model
75 mm x 75 mm	VSTAND-A07-R11
75 mm x 75 mm/100 mm x 100 mm	VSTAND-A10-R11
	VSTAND-A12-R11



VSTAND-A07 VSTAND-A10 VSTAND-A12

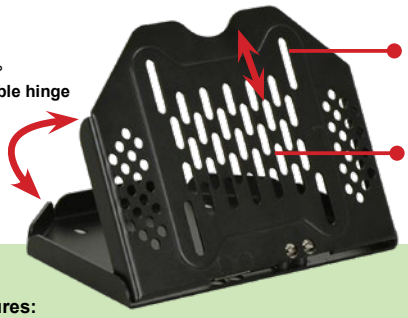

Features:
- 0° to 90° adjustable hinge design allows comfortable viewing
- Standard VESA 75/100 compliant
- Heat dissipation holes
- Compact size, easy to use in any places

Space saving and easy installation



1: Tighten the screws in the rear of the system's VESA mounting holes

2: Select the position to mount the stand kit

3: Power up the system to operate

Compact size provides mobility



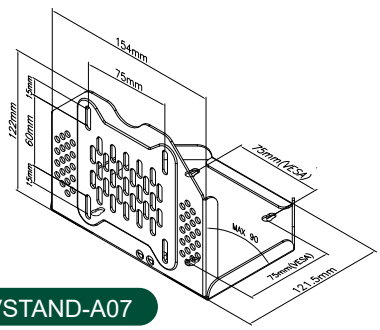

VSTAND-A07

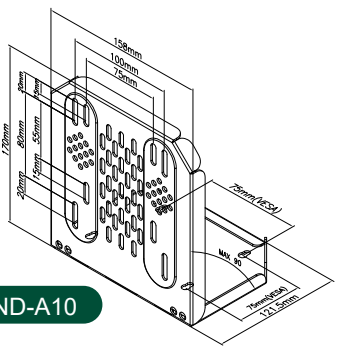

VSTAND-A10

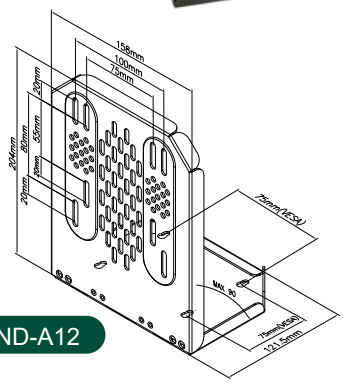

VSTAND-A12

Ordering Information

Part No.	Description
VSTAND-A07-R11	LCD monitor / PPC stand V type, for AFL series, VESA 75, 0~90 degree adjustable hinge, support up to 2.5 kg, RoHS
VSTAND-A10-R11	LCD monitor / PPC stand V type, for AFL series, VESA 75/100, 0~90 degree adjustable hinge, support up to 3 kg, RoHS
VSTAND-A12-R11	LCD monitor / PPC stand V type, for AFL series, VESA 75/100, 0~90 degree adjustable hinge, support up to 3.5 kg, RoHS

Wall Mounting

VESA 75/100 Wall Mounting

Secure the panel by fastening the retention screw of the bracket.



VESA	Model
75 mm x 75 mm	AFLWK-12
100 mm x 100 mm	AFLWK-19
	AFLWK-19B

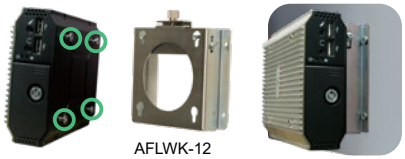

AFLWK-12

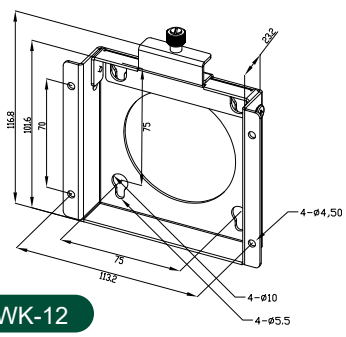

AFLWK-12

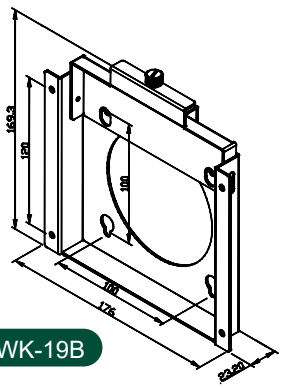

AFLWK-19B

Ordering Information

Part No.	Description
AFLWK-12	5.6"~12" VESA 75 PPC/monitor wall mount kit with retention screw, silver color, RoHS
AFLWK-19B	15"~19" VESA 100 PPC/monitor wall mount kit with retention screw, silver color, RoHS