PPC-315S(W) ADL_N
PPC-317S ADL_N
PPC-318SW ADL_N
PPC-319S ADL_N
PPC-321SW ADL_N

15"/17"/19"/15.6"/18.5"/21.5" Fanless Panel PC with Intel® N97 Quad-Core Processor



Features

- Intel® Alder Lake N97 2.0GHz quad-core processor
- 15"/17"/19"/15.6"/18.5"/21.5" true-flat TFT LCD with resistive touch or projected capacitive touch control
- Fanless design with low power consumption
- Supports 1 x M.2 M Key 2280 (SATA or NVME PCIe x 1), 1 x 2.5" SATA bay for storage
- Supports dual displays (1 x external DP)
- Supports iDoor
- Support PCI or PCIe
- Supports VESA 75
- IP66-rated front panel

Introduction

PPC-300 ADL_N is a high-value, ultra-slim panel PC equipped with TFT LCD, and low-power Intel® N97 quad-core, 2.0GHz, processor to provide highperformance computing in a compact and fanless system. For high durability and functionality, the PPC-300 ADL_N features an IP66-rated front panel, resistive touch or projected capacitive touchscreen, die cast aluminum alloy enclosure, two serial ports, four USB ports, and two GbE LAN ports, making it suitable for diverse industrial applications.

Specifications

Model Name		PPC-315S	PPC-317S	PPC-319S	PPC-315SW	PPC-318SW	PPC-321SW
Processor System	CPU	Intel® Alder lake N N97 quad core					
	Frequency	2.0 GHz up to 3.6GHz with Turbo					
	Cache	6MB					
	Memory	1 x SODIMM, DDR5 4800MHz, max. 16GB					
	Storage	1 x 2.5" SATA bay 1 x M.2 M Key 2280 (SATA or NVME PCIe x 1)					
	Network (LAN)	2 x 10/100/1000/2500 Mbps Ethernet (Intel i226 LM)					
	I/O ports	2 x RS-232/422/485 2 x USB3.2, 2 x USB2.0 1 x GPIO & 2 x USB 2.0 (optional) 1 x DP 1 x Line out					
	Expansion	1 x M.2 B key 2242 or 3042/3052 (PCIe x1, USB 3.0 & SIM slot), support idoor & 4G, and 5G by request 1 x M.2 E Key 2230 (PCIe & USB 2.0) 1 x iDoor (optional)* 1 x PCI or PCIe x1 (optional)**					
	Watchdog Timer	255 timer levels; setup by software					
	Speaker	1 x 2W					
Physical Characteristics	Dimensions	359.6 x 283.6 x 50.4 mm (14.1 x 11.2 x 2.0 in)	393.4 x 325.8 x 53.4 mm (15.5 x 12.8 x 2.1 in)	429.7 x 354.6 x 56.4 mm (16.9 x 13.96 x 2.2 in)	395.7 x 245.1 x 50.4 mm (15.6 x 9.6 x 2.0 in)	464.5 x 285.5 x 53.4 mm (18.3 x 11.2 x 2.1 in)	529.6 x 321.3 x 53.4 mm (20.9 x 12.6 x 2.1 in)
	Weight	4.29 kg (9.46 lb)	5.17 kg (11.4 lb)	6.3 kg (13.9 lb)	4.26kg (9.4 lb)	5.17kg (11.4 lb)	6.24kg (13.8 lb)
OS Support	OS Support	Windows 10 LTSC, Windows 11, Linux, Andriod (by request)					
Power Comsumption	Input Voltage	24V_{DC} ± 30%					
	Power Consumption	45W	48W	55W	35W	40W	45W
LCD Display	Display size	15" TFT LCD (LED backlight)	17" TFT LCD (LED backlight)	19" TFT LCD (LED backlight)	15.6" FHD TFT LED LCD	18.5" WXGA TFT LED LCD	21.5" FHD TFT LED LCD
	Max. Resolution	1024 x 768	1280 x 1024	1280 x 1024	1920 x 1080	1366 x 768	1920 x 1080
	Viewing Angle	88 (left), 88 (right), 88 (up), 88 (down)	89 (left), 89 (right), 89 (up), 89 (down)	89 (left), 89 (right), 89 (up), 89 (down)	89 (left), 89 (right), 89(up), 89 (down)	85 (left), 85 (right), 80 (up),80 (down)	89 (left), 89 (right), 89(up), 89 (down)
	Luminance(cd/m²)	300	250	450	350	450	250
	Contrast Ratio	2000	1000	1000	800	1000	1000
	Backlight Lifetime	50,000 hr (min.)					
Touchscreen	Touch Type	5 wire resistive touch or MIti-touch projected capacitive			MIti-touch projected capacitive		
	Light Transmission	81%±3% (Res) or >86% (P-cap)			86% (P-cap)		
	Controller	USB interface					
Environment	Operating Temperature	-10 ~ 50 °C (32 ~ 122 °F)					
	Storage Temperature	-30 ~ 60 °C	-20 ~ 60 °C				
	Relative Humidity	95% @ 40 °C (Non-Condensing)					
	Shock	Operating 10 G Peak Acceleration (11 ms Duration), Follows IEC 60068-2-27					
	Vibration	Operating Random Vibration Test 5~500Hz,; 2Grms @with SSD, Follows IEC 60068-2-64					
	EMC	CE,FCC Class B, BSMI, EN60601-1-2, UKCA					
	Safety	CB,UL,CCC,UKCA					
	Front Panel Protection	IP66 compliant					

All product specifications are subject to change without notice.

Last updated: 27-May-2026

Dimensions

Unit: mm

PPC-315S

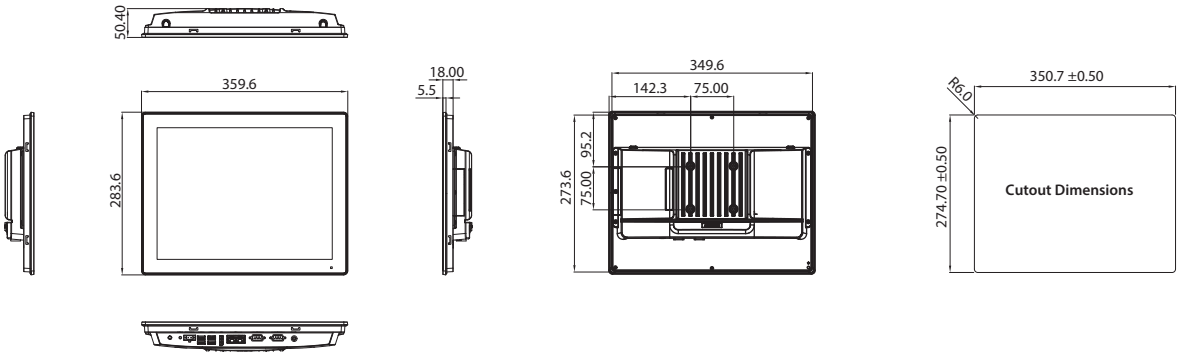

Panel Cutout Dimensions: 350.7 x 274.7 mm (13.81 x 10.82 in)

PPC-315SW

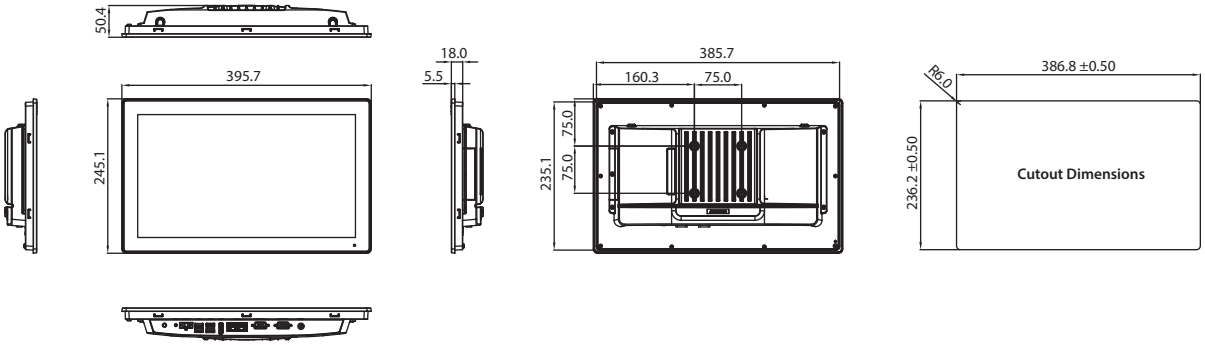

Panel Cutout Dimensions: 386.8 x 236.2 mm (15.23 x 9.30 in)

PPC-317S

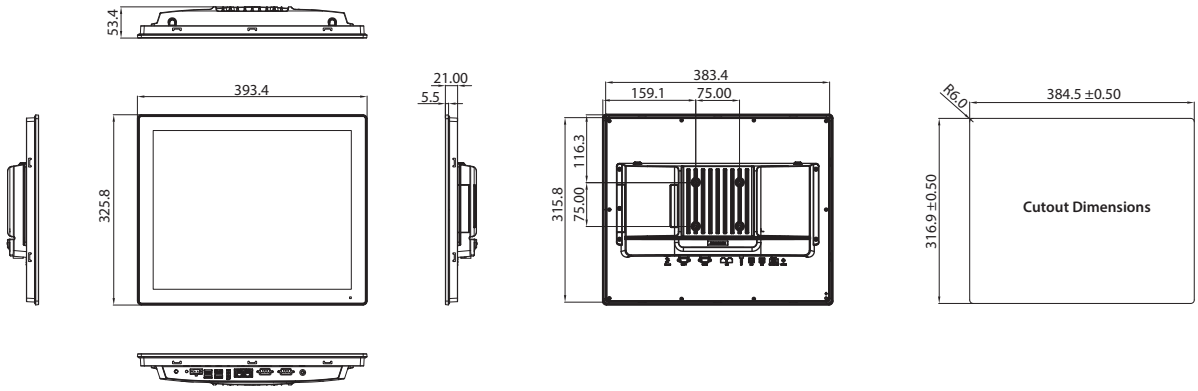

Panel Cutout Dimensions: 384.5 x 316.9 mm (15.14 x 12.48 in)

Dimensions

Unit: mm

PPC-318SW

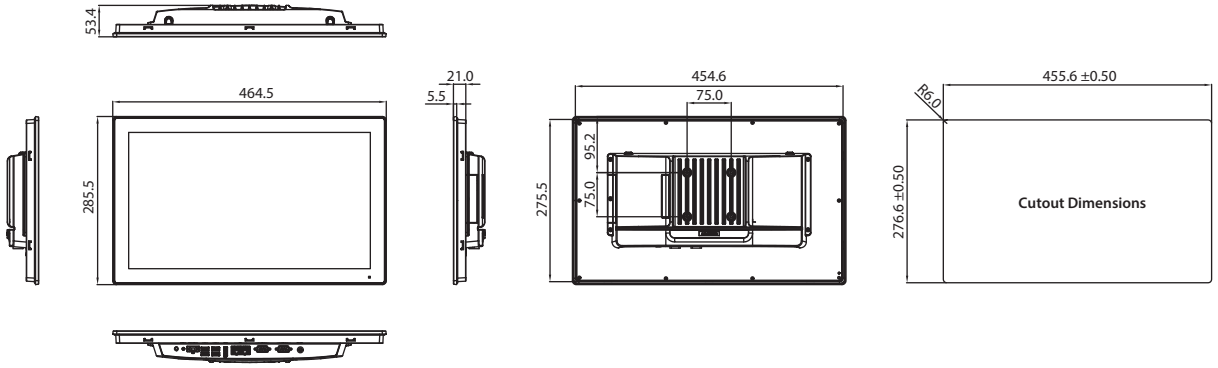

Panel Cutout Dimensions: 455.6 x 276.6 mm (17.94 x 10.89 in)

PPC-319S

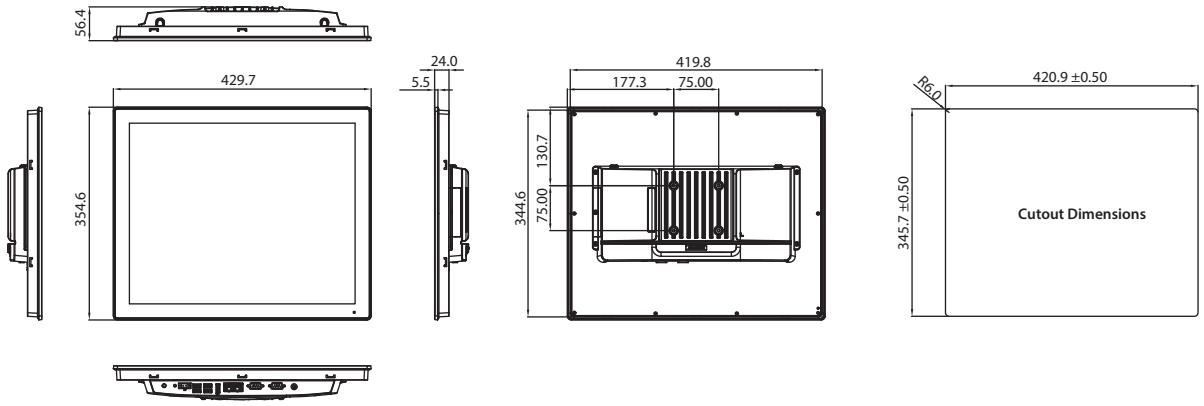

Panel Cutout Dimensions: 420.9 x 345.7 mm (16.57 x 13.61 in)

PC-321SW

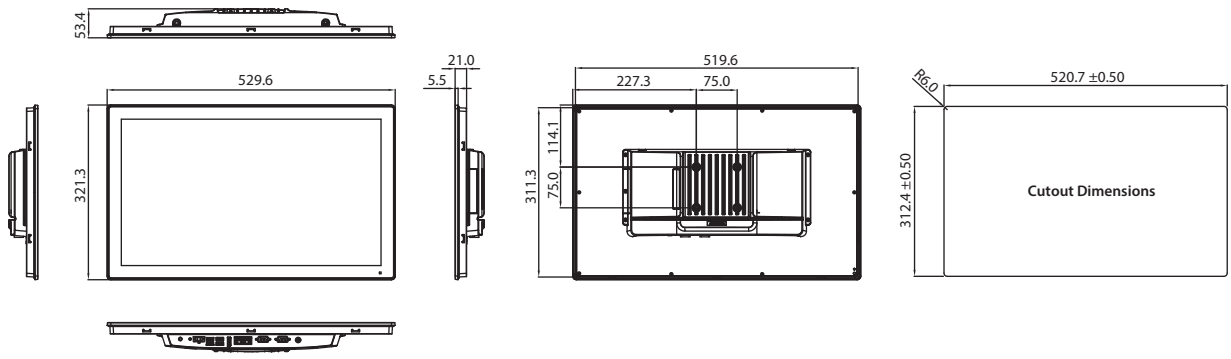

Panel Cutout Dimensions: 520.7 x 312.4 mm (20.5 x 12.3 in)

Dimensions

Unit: mm

The dimension with the PCI or PCIe expansion box (98R1P300S00)

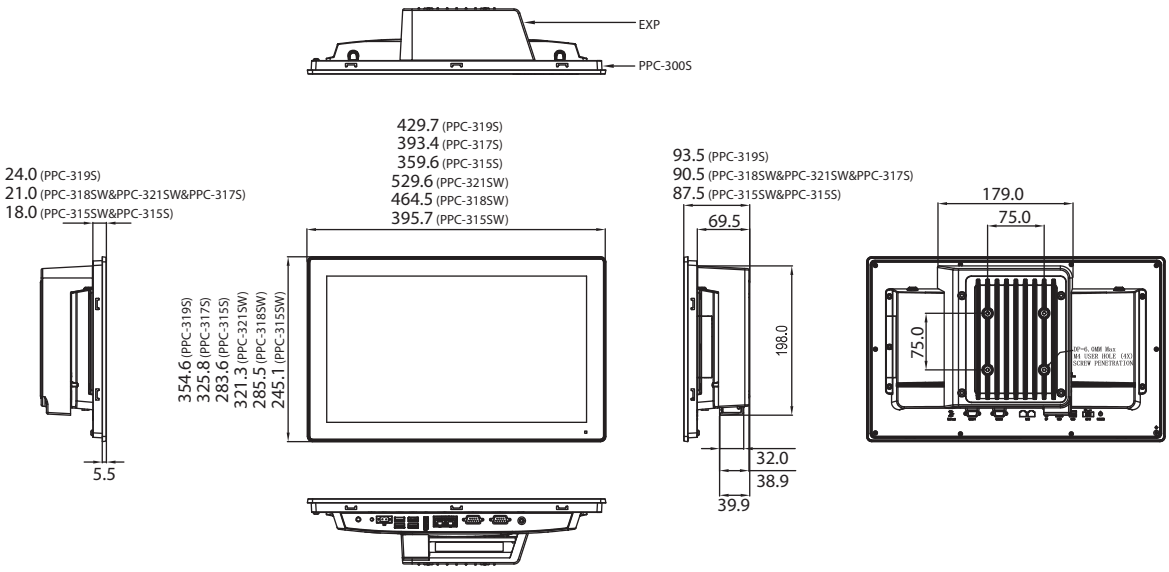

Ordering Information

Part Number	Description
PPC-315S-RN9A	15" PPC w/Intel N97,Res.
PPC-315S-PN9A	15" PPC w/Intel N97,Pcap
PPC-315SW-PN9A	15.6" PPC w/Intel N97,Pcap
PPC-317S-RN9A	17" PPC w/Intel N97,Res.
PPC-317S-PN9A	17" PPC w/Intel N97,Pcap
PPC-318SW-PN9A	18.5" PPC w/Intel N97,Pcap
PPC-319S-RN9A	19" PPC w/I N97, RTP
PPC-319S-PN9A	19" PPC w/I N97, P-Cap
PPC-321SW-PN9A	21.5" PPC w/Intel N97,Pcap
96PSA-A90W19OT-3	Power adapter 100-240V 90W 19V
1700001524	POWER Cord 3P UL 10A 125V 180cm
170203183C	POWER Code 3P Europe (WS-010+083)183 cm
1700008921	POWER CORD 3P/3P POWER SUPPLY 1.8 M PSE
96CB-POWER-B-1.8MB	Power code 3P CCC(China) 1.8M
PPC-174T-WL-MTE	Wall mount kit for PPC series
PPC-STAND-A1E	Stand for PPC series
PPC-WLAN-D2	M.2, WiFi6 +BT5.2, 2T2R, w/Antenna, Mini PCIe
98R3P300010	PPC-300 RFID Read only 13.56MHz&125k
98R1P300S00	Add-on box for PCI or PCIe expansion (include PCI / PCIe riser card)**
98R1P300S10	Additional ports module (2 x USB 2.0 + 1 x GPIO)*

* iDOOR, additional ports or 2.5" SATA bay can't be installed in the same time since they share the same space
** PCIe riser card supports PCIe x1 singal, but the slot is PCIe x4 (PCIe x1 compatiable).

Support iDoor Modules

Part Number	Description
PCM-34R1TP-AE	1 port Gigabit Ethernet, Intel® I225, 2.5Gb/s, TSN
PCM-34R2GL-AE	2 ports Gigabit Ethernet, Intel® I350
PCM-34D2R4-AE	2 ports Isolated RS-422/485, DB9
PCM-34D2R2-AE	2 ports Isolated RS-232, DB9
PCM-34D4R4-AE	4 ports non-isolated RS-422/485, DB37 cable
PCM-34D4R2-AE	4 ports non-isolated RS-232, DB37 cable
PCM-37D24DI-AE	24 channels isolated digital I/O with counter, DB37
PCM-23C1CF-BE	1 slot Cfast iDoor for CFast

I/O View

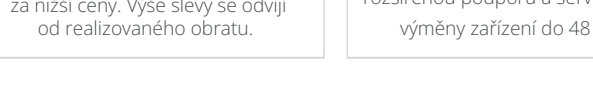

A. Line out
B. COM1: RS-232/422/485
C. COM2: RS-232/422/485
D. 2 x LAN
E. DP
F. 2 x USB 3.2
G. 2 x USB 2.0
H. DC-In
I. Power Button
J. Pre cut hole for power button cable extend

Online Download www.advantech.com/products

Tento produkt můžete zakoupit u společnosti AutoCont IPC a.s.

AutoCont IPC a.s.
Váš dodavatel průmyslových počítačů, komponent a speciálních průmyslových IT systémů.
Uhlířská 1064/3, 710 00 Ostrava, Česká republika
obchod@autocont-ipc.cz +420 733 688 944 www.autocont-ipc.cz

PRŮMYSLOVÉ POČÍTAČE *fanless embedded PC, do racku, ...*
POČÍTAČE S DISPLEJEM *panelové PC, terminály, do vozidel, ...*
AUTOMATIZACE A SBĚR DAT *převodníky, karty, moduly, switche, ...*
PERIFERIE A KOMPONENTY *monitory, klávesnice, desky, skříně, ...*
NOTEBOOKY A TABLETY *odolné, windows, android, IP65, ...*
INFORMAČNÍ KIOSKY *interiérové, venkovní, ...*
MEDICÍNSKÁ TECHNIKA *počítače, tablety, LCD, klávesnice, ...*
SOFTWAROVÁ ŘEŠENÍ *pro výrobu, zaměstnance, kiosky, ...*
PŘEJÍT DO E-SHOPU *eshop.autocont-ipc.cz*

DOPRAVA ZDARMA
Doprava zdarma v ČR a SR při objednávce nad 10 000 Kč bez DPH nebo nad 400 EUR.

PRODLOUŽENÁ ZÁRUKA
Záruka 2 roky na vyráběné počítače s možností jejího prodloužení až na 5 let.

ODMĚNA ZA VĚRNOST
Pravidelní zákazníci u nás nakupují za nižší ceny. Výše slevy se odvíjí od realizovaného obratu.

SERVIS ON-SITE A IN-TIME
K projektovým dodávkám nabízíme rozšířenou podporu a servis s garancí výměny zařízení do 48 hodin.