EKI-9510E-2GPH
EKI-9510E-2GPL

EN 50155 10-port Unmanaged PoE M12 Ethernet Switch 72/96/110 V_{DC}
EN 50155 10-port Unmanaged PoE M12 Ethernet Switch 24/48 V_{DC}

CE FCC

Features

- Complies with EN50155
- 8 x M12 D-Coded 10/100Mbps PoE ports + 2 x M12 X-Coded 10/100/1000Mbps ports with Bypass function
- Power Input
  EKI-9510E-2GPH: 72/96/110 V_{DC}
  EKI-9510E-2GPL: 24/48 V_{DC}
- Operating Voltage
  EKI-9510E-2GPH: 50.4~137.5 V_{DC}
  EKI-9510E-2GPL: 16.8~60 V_{DC}
- 8-port PoE support IEEE802.3 at/af
- M12 connector with IP40 protection

Introduction

EKI-9500 series switch is designed for railway application, with rugged and high EMC performance. EKI-9500 series is the suitable networking solution for rolling stock and wayside applications. EKI-9500 series provide M12 connectors for Ethernet/ console/ relay/ power-input connections to ensure tight & robust connectivity, to guarantee reliable operation against environmental disturbances, such as vibration and shock on train. EKI-9510E-2GPH & EKI-9510E-2GPL is a PoE Ethernet switch, it provides 8 x Fast Ethernet M12 D-code interface with IEEE802.3af/at PoE(Power Over Ethernet) function. PoE ports can total provide up to 100Watts power budget for P.D. devices (such as camera, IP-phone and wireless access point). It also provides 2 x Gigabit Ethernet M12 X-code interface with Bypass function, to increase the reliability of the network. EKI-9510E-2GPH/ PL features a "flat" design, can be easy deployed with its slender size and let network deployment more simple in crowded carriage/ cabinet.

Specifications

Interface

- **I/O Port** — 8 x M12 D-Coded 10/100Mbps PoE ports + 2 x M12 X-Coded 10/100/1000Mbps ports with Bypass function
- **Power Connector** — M12 A-Coded

Physical

- **Enclosure** — Aluminum Shell
- **Protection Class** — IP 40
- **Installation** — Wall Mount
- **Dimensions (W x D x H)** — 216 x 132 x 59.3 mm
- **Weight** — 1.5kg

LED Display

- **System LEDs** — PWR1, PWR2, SYS, Alarm
- **Port LED** — Data, PoE

Environment

- **Operating Temperature** — -40 ~ 70°C (-40 ~ 158°F)
- **Storage Temperature** — -40 ~ 85°C (-40 ~ 185°F)
- **Ambient Relative Humidity** — 10~ 95% (non-condensing)

Power

- **Power Consumption** — 10 Watts
- **PoE Power Budget** — EKI-9510E-2GPH: 120 Watts
  EKI-9510E-2GPL: 60 Watts
- **Power Input** — EKI-9510E-2GPH: 72/96/110 V_{DC}
  EKI-9510E-2GPL: 24/48 V_{DC}
- **Operating Voltage** — EKI-9510E-2GPH: 50.4~137.5 V_{DC}
  EKI-9510E-2GPL: 16.8~60 V_{DC}
  Dual inputs Supports Overload Current Protection
  Supports Reverse Polarity Protection

Certification

- **EMI** — FCC Part 15 Subpart B Class A
  CE EN55032 (CISPR)
  EN55024 Class A
- **EMS** — EN61000-4-2 (ESD); EN61000-4-3 (RS); EN61000-4-4 (EFT); EN61000-4-5 (Surge); EN61000-4-6 (CS)
- **Shock** — IEC 61373
- **Freefall** — IEC 60068-2-32
- **Vibration** — IEC 61373
- **Certificate** — EN 50155; EN50121-3-2

L2 Features

- **L2 MAC Address** — 8K
- **Jumbo Frame** — 9KB

All product specifications are subject to change without notice.

Dimensions

Unit: mm [inch]

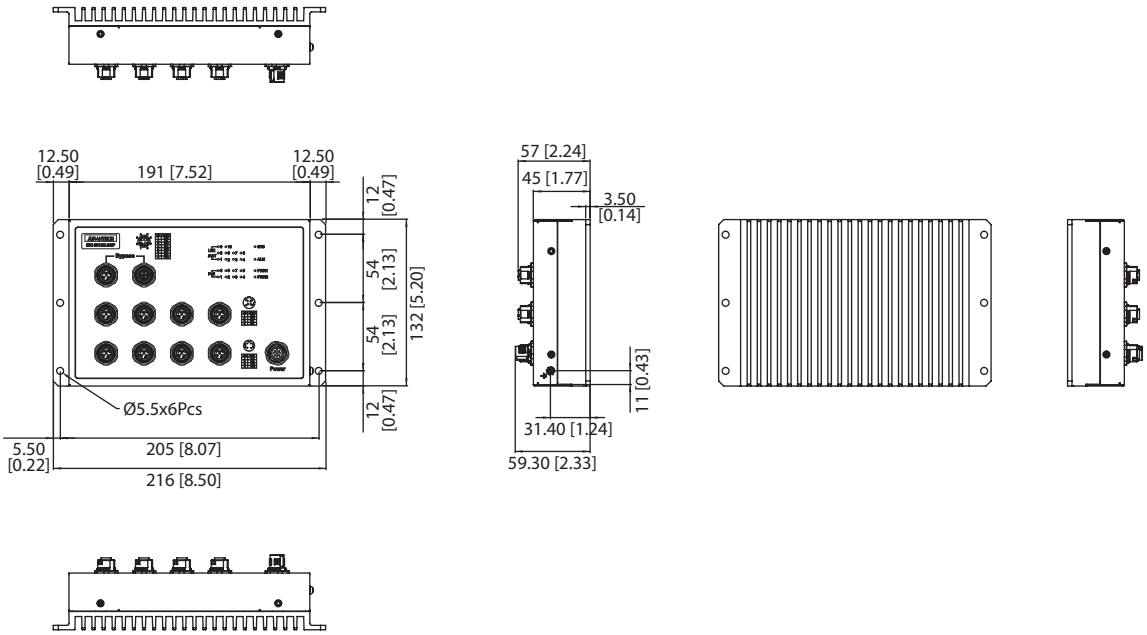

Ordering Information

- **EKI-9510E-2GPH-AE** 8 x M12 D-Coded PoE + 2 x M12 X-Coded Unmanaged Ethernet Switch, 72/96/110V_{DC} duall power input
- **EKI-9510E-2GPL-AE** 8 x M12 D-Coded PoE + 2 x M12 X-Coded Unmanaged Ethernet Switch, 24/48V_{DC} duall power input

Accessories

PN		Description
OPT1-M12-CRP-4MD		Phoenix Contact M12 D-code 4 pin Male crimp type connector
OPT1-M12-CRP-8MX		Phoenix Contact M12 X-code 8 pin Male crimp type connector
OPT1-M12-CRP-4FA		Phoenix Contact M12 A-code 4 pin Female crimp type connector
OPT1-M12C-4MD-150R		M12 D-code 4 pin Male to RJ45, cable length:1.5m
OPT1-M12C-8MX-150R		M12 X-code 8 pin Male to RJ45, cable length:1.5m
OPT1-M12C-4FA-100		M12 A-code 4 pin Female to 1m cable
1990023703S000		M12 waterproof CAP (1pc.)

Tento produkt můžete zakoupit u společnosti AutoCont IPC a.s.

AutoCont IPC a.s.

Váš dodavatel průmyslových počítačů, komponent a speciálních průmyslových IT systémů.

Uhlířská 1064/3, 710 00 Ostrava, Česká republika

obchod@autocont-ipc.cz +420 552 301 002 www.autocont-ipc.cz

PRŮMYSLOVÉ POČÍTAČE
fanless embedded PC, do racku, ...

POČÍTAČE S DISPLEJEM
panelové PC, terminály, do vozidel, ...

AUTOMATIZACE A SBĚR DAT
převodníky, karty, moduly, switche, ...

PERIFERIE A KOMPONENTY
monitory, klávesnice, desky, skříně, ...

NOTEBOOKY A TABLETY
odolné, windows, android, IP65, ...

INFORMAČNÍ KIOSKY
interiérové, venkovní, ...

MEDICÍNSKÁ TECHNIKA
počítače, tablety, LCD, klávesnice, ...

SOFTWAROVÁ ŘEŠENÍ
pro výrobu, zaměstnance, kiosky, ...

PŘEJÍT DO E-SHOPU
eshop.autocont-ipc.cz

DOPRAVA ZDARMA
Doprava zdarma v ČR a SR při objednávce nad 10 000 Kč bez DPH nebo nad 400 EUR.

PRODLOUŽENÁ ZÁRUKA
Záruka 2 roky na vyráběné počítače s možností jejího prodloužení až na 5 let.

ODMĚNA ZA VĚRNOST
Pravidelní zákazníci u nás nakupují za nižší ceny. Výše slevy se odvíjí od realizovaného obratu.

SERVIS ON-SITE A IN-TIME
K projektovým dodávkám nabízíme rozšířenou podporu a servis s garancí výměny zařízení do 48 hodin.