AIM-68

10.1" Industrial Tablet with Intel® Atom™ Processor

Features

- Intel® Atom™ processor with support for Windows 10 IoT and Android 6.0
- 10.1" WUXGA full HD display with scratch-resistant Corning® Gorilla® Glass 3 and multi-touch PCAP control
- WLAN, BT, NFC, 3G/4G LTE technologies for seamless communication
- Optional extension modules such as 1D/2D barcode scanner, LAN+COM module, and UHF RFID reader module
- Optional accessories include an active stylus pen, hand strap, shoulder strap, as well as vehicle, VESA, and office docking stations
- Additional modules and accessories can be customized according to application requirements

Specifications

System	Processor	Intel® Atom™ x7-Z8750 quad-core, 1.6 GHz (2M cache, up to 2.56 GHz)
	Memory	4 GB LPDDR3
	OS	Windows 10 IoT Enterprise, Android 6.0
Storage	eMMC	64 GB
Display	Type	10.1" FHD LCD
	Resolution	WUXGA 1920 x 1200
	Brightness	380 cd/m² (optional 800 cd/m²)
Touchscreen	Type	Corning® Gorilla® Glass 3 with 10-point P-CAP touch control
Audio	Speaker	2 x Internal speakers (2 W)
	Audio Jack	1 x Audio combo jack (combines stereo audio output and mono microphone input)
Camera	Front	2.0-megapixel fixed-focus camera
	Rear	5.0-megapixel aufo-focus camera with LED flash
Sensors		Ambient light sensor, e-compass, G-sensor, gyroscope
Barcode Scanner (Optional)		Integrated 1D/2D barcode scanner
I/O Interface	Standard I/O	1 x Micro HDMI, 1 x USB 3.0, 1 x combo audio jack, 1 x 19 VDC-in jack, 1 x SIM card reader, 1 x micro SD card reader
	Extended I/O	1 x AIM extension 14-pin pogo connector, 1 x USB 2.0, 1 x 2-wire UART, 5V/1A power
	Docking	1 x AIM docking 16-pin pogo connector, 1 x USB 3.0, 9V power
	Buttons	1 x Power button, 2 x volume keys (up/down), 1 x programmable function key
	LED Indicator	Full: green (100%); Charging: blue; Low: red (≤10%)
Wireless Communication	WLAN/Bluetooth	IEEE 802.11a/b/g/n/ac, Bluetooth® v4.1
	WWAN (Optional)	4G LTE multi-device broadband
	NFC	13.65 MHz, compatible with ISO15693, ISO14443A, ISO 14443B, FeliCa
Power System	Input Voltage	DC jack: 19V/3.41A Docking pogo: 9V/2A
	Battery	Hot-swappable smart battery with capacity LED indicators; Capacity: 26 WHr Operating time: Approximately 5.5 hr (depending on usage scenario*) Charging time: < 3 hr
Mechanical	Dimensions (W x D x H)	280 x 18.3 x 180.1 mm (11 x 0.7 x 7.1 in)
	Weight	980 g (2.2 lb)
Environment	Operating Temperature	-10 ~ 50 °C (14 ~ 122 °F)
	Storage Temperature	-20 ~ 70 °C (-4 ~ 158 °F)
	IP Rating	IP65
	Shock	Operating: 10 ~ 20 G, 11 ms; Non-operating: 50 G ,11 ms
	Vibration	Operating: (5 ~ 500 Hz) 0.5 ~ 1 G; Non-operating: (5 ~ 500 Hz) 0.04 PSD
	Humidity	Operating: 10 ~ 90% @ 40 °C non-condensing Storage: -10 ~ 95% non-condensing
	Altitude	Operating: sea level 0 to 3048 m (10k ft); Storage: sea level 0 to 12192 m (40k ft)
	Drop Tested	Up to 120 cm (4 ft) onto plywood over concrete
	Safety/EMC	UL, CB, LVD + Energy Star 6.1, CE, FCC, IC, VCCI, BSMI
	Certifications	FCC ID, TELEC, NCC, SRRC, RCM

*Testing method: JEITA 2.0. The battery duration and recharge time may vary according to different factors such as screen brightness, applications, features, power management, battery condition, and other configurable settings.

Dimensions

Unit: mm

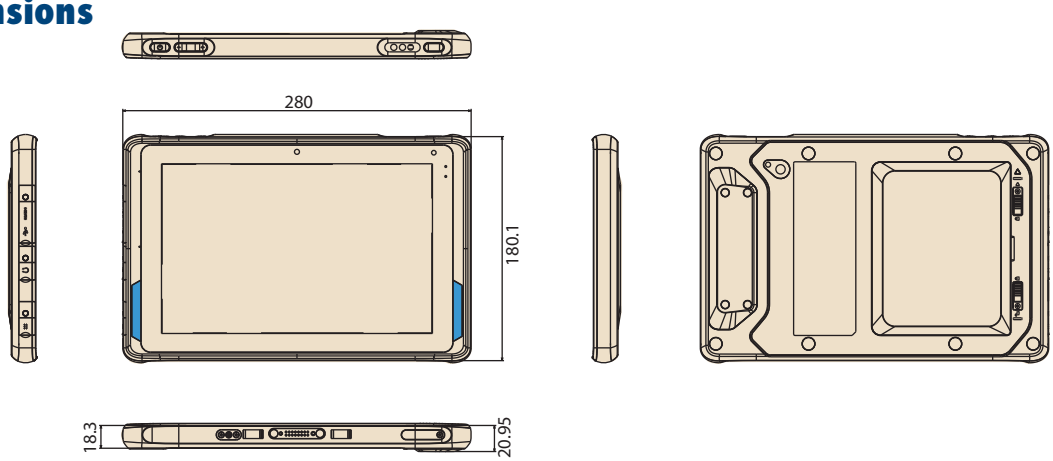

System I/O

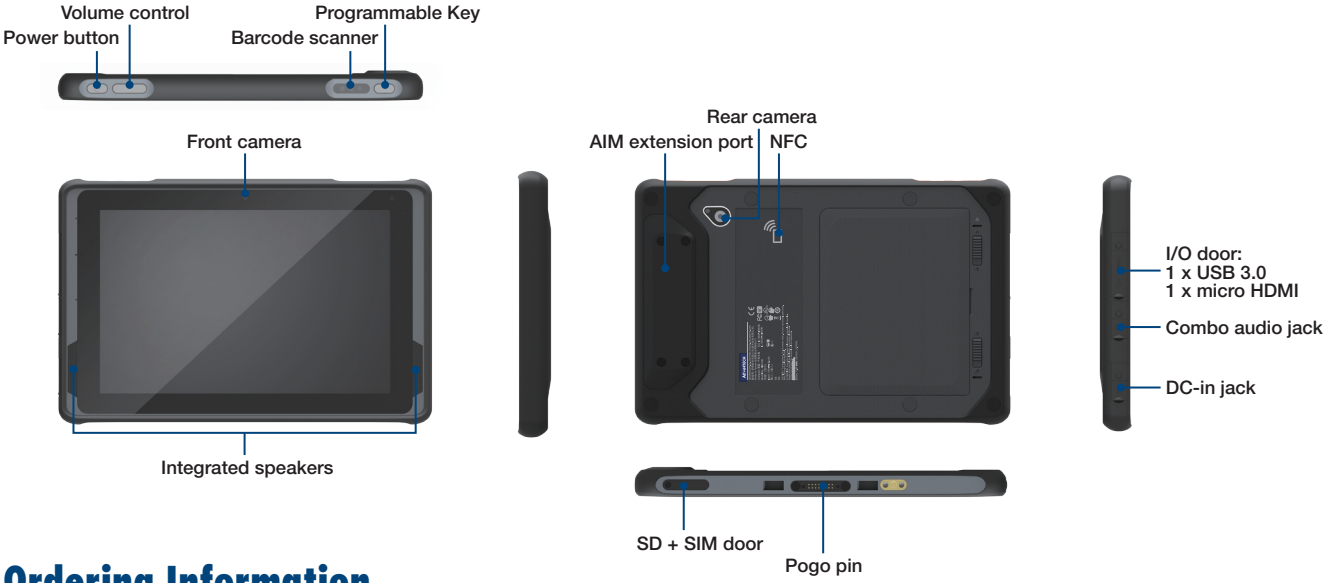

Ordering Information

Part Number	CPU	Memory	Storage	LCD	Barcode	NFC	Wi-Fi/BT	WI-FI Pass Through	LTE+GPS	F-Camera	R-Camera	OS
AIM-68CT-C2101000	Intel CHT I Z8750	4 GB	64 GB	380 nits	X	V	V	X	X	2M	5M	Win 10 IoT Enterprise
AIM-68CT-C21B1000	Intel CHT I Z8750	4 GB	64 GB	380 nits	V	V	V	X	X	2M	5M	Win 10 IoT Enterprise
AIM-68CT-C2103000	Intel CHT I Z8750	4 GB	64 GB	380 nits	X	V	V	X	V (NA)	2M	5M	Win 10 IoT Enterprise
AIM-68CT-C2105000	Intel CHT I Z8750	4 GB	64 GB	380 nits	X	V	V	X	V (EU)	2M	5M	Win 10 IoT Enterprise
AIM-68CT-C2104000	Intel CHT I Z8750	4 GB	64 GB	800 nits	X	V	V	X	V (NA)	2M	5M	Win 10 IoT Enterprise
AIM-68CT-C2106000	Intel CHT I Z8750	4 GB	64 GB	800 nits	X	V	V	X	V (EU)	2M	5M	Win 10 IoT Enterprise
AIM-68CT-C3101000	Intel CHT I Z8750	4 GB	64 GB	380 nits	X	V	V	X	X	2M	5M	Android 6.0
AIM-68CT-C31B1000	Intel CHT I Z8750	4 GB	64 GB	380 nits	V	V	V	X	X	2M	5M	Android 6.0
AIM-68CT-C3103000	Intel CHT I Z8750	4 GB	64 GB	380 nits	X	V	V	X	V (NA)	2M	5M	Android 6.0
AIM-68CT-C3105000	Intel CHT I Z8750	4 GB	64 GB	380 nits	X	V	V	X	V (EU)	2M	5M	Android 6.0
AIM-68CT-C3104000	Intel CHT I Z8750	4 GB	64 GB	800 nits	X	V	V	X	V (NA)	2M	5M	Android 6.0
AIM-68CT-C3106000	Intel CHT I Z8750	4 GB	64 GB	800 nits	X	V	V	X	V (EU)	2M	5M	Android 6.0

Optional Accessories

Part Number	Description
1700001947	Power cord UL 2P 7A 125 V 183 cm
1700008972	Power cord CCC 2P 2.5A 250 V 183 cm
1700001948-11	Power cord EU 2P 2.5A 250 V 183 cm
Y4AAIM10019	AIM-68 adaptor (DC-in to 2-pin power cord)

AIM-68 Packing List

Description
1 x AIM-68
1 x AC/DC adaptor
1 x 2-pin power cord (USA)

For sales inquiries or further information, please contact us at Mobile@advantech.com.tw

AIM-VEH10

Vehicle Docking Stations for AIM-68 Industrial-Grade Tablet

Features

- Compatible with 9 ~ 32 V_{DC} in-vehicle power supply
- Easy and instant single-handed docking and undocking
- Anti-theft locking mechanism
- External GPS antenna
- Programmable function keys
- High-density connectors
- Compliant with SAE J1455 for vibration and shock tolerance
- Safe and reliable design for vehicle applications

CE FCC

Specifications

		Fully Configured Unit	Charging Dock Only
I/O	High-Density Connector	1 x CAN bus (supports raw CAN, J1939, OBD-II/ISO 15765) with configurable firmware 5 x Digital inputs 1 x Odometer (supports dry and wet contact) with configurable and switchable firmware (default wet contact) 2 x Digital outputs (supports speed pulse) 1 x RS-232 (4 wire) 1 x RS-232/485 (2 wire) (default RS-485, termination enabled) 1 x USB 2.0 1 x Power input 12 V 1 A	1 x Power input 12 V 1A
GPS	GPS Extended	1 x External GPS antenna	N/A
Function Keys		5 x Programmable function keys	N/A
Key Lock		Anti-theft key lock (key can be removed)	N/A
Power	Input Voltage	Supports 12/24 V vehicle power (9 ~ 32 V_{DC} input range)	
Mechanical	Dimensions (W x D x H)	226 x 78.6 x 250.24 mm (8.9 x 3.1 x 9.9 in)	
	Weight	0.5 kg (1.10 lb)	
Environment	Operating Temperature	-10 ~ 50 °C (14 ~ 122 °F); 0 ~ 40 °C (32 ~ 104 °F) for charging	
	Storage Temperature	-30 ~ 80 °C (-22 ~ 176 °F)	
	IP Rating	IP54	
	Vibration/Shock	SAE J1455	
	Safety	UL, CB, LVD, CCC	
	Vehicle Power Regulation	ISO7637-2	
	Certifications	CE, FCC, CCC	

Ordering Information

Part Number	Description
TBD	AIM vehicle docking station (full configuration)
TBD	AIM vehicle docking station (charging only)
1700026766-01	High-density cable
PWS-770-GPSAN00E	External GPS antenna
1700027666-01	Vehicle power cable (In-house engineer testing only)
1700027665-01	Vehicle power cable (vehicle battery)

Packing List

Description
1 x AIM-VHE10
1 x Vehicle power cable (vehicle battery)

Dimensions

Unit: mm

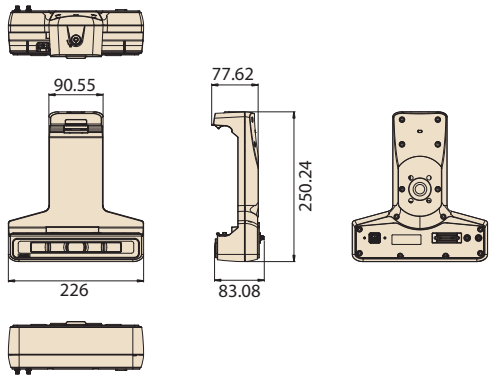

AIM-VSD

VESA Docking Stations for AIM-68

Features

- 9 ~ 32 V wide input voltage range
- VESA (75 x 75 mm)-compliant docking stations
- -10 ~ 50 °C (14 ~122 °F) operating temperature
- Reliable docking connector for office applications

CE FCC

Specifications

		Advanced VESA Docking Station	VESA Docking Station with USB
I/O		2 x USB 3.0/2.0 1 x RS-232 COM 1 x Gigabit LAN 1 x Power jack	2 x USB 2.0 1 x Power jack
Stand		N/A	N/A
Power	Input Voltage	9 ~ 32 V	19 V
Mechanical	Dimensions (W x D x H)	159.13 x 75.49 x 227 mm (6.3 x 2.9 x 8.9 in)	159.13 x 75.49 x 227 mm (6.3 x 2.9 x 8.9 in)
	Weight	0.282 kg (0.62 lb)	0.28 kg (0.61 lb)
Environment	Operating Temperature	-10 ~ 50 °C (14 ~122 °F); 0 ~ 40 °C (32 ~104 °F) for charging	-10 ~ 50 °C (14 ~122 °F); 0 ~ 40 °C (32 ~104 °F) for charging
	Storage Temperature	-20 ~ 70 °C (-4 ~ 158 °F)	-20 ~ 70 °C (-4 ~ 158 °F)
	Safety	UL, CB, LVD, CCC	UL, CB, LVD, CCC
	Certifications	CE, FCC, CCC	CE, FCC, CCC

Dimensions

Unit: mm

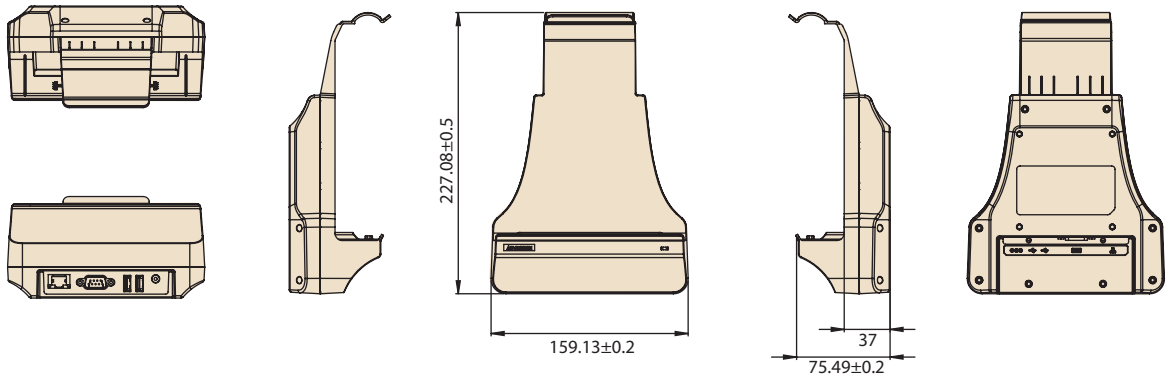

Ordering Information

Part Number	Description
AIM-VSD0-0470	AIM 10 advanced VESA docking station
AIM-VSD0-0471	AIM 10 VESA docking station with USB

Packing List

Description
1 x AIM-VSD

AIM-DDS

Desk Docking Stations for AIM-68

Features

- -10 ~ 50 °C (14 ~122 °F) operating temperature
- Reliable docking connector for office applications

CE FCC

Specifications

		AIM Advanced Desk Docking Station	AIM 10 Desk Docking Station
I/O		2 x USB 2.0 1 x RS-232 COM 1 x Power jack 1 x HDMI 1 x Battery charging bay	2 x USB 2.0 1 x Power jack
Power	Input Voltage	19 V	19 V
Mechanical	Dimensions (W x D x H)	196 x 169.44 x 122.12 mm (7.72 x 6.67 x 4.81 in)	196 x 169.44 x 122.12 mm (7.72 x 6.67 x 4.81 in)
	Weight	0.745 kg (1.64 lb)	0.73 kg (1.60 lb)
Environment	Operating Temperature	-10 ~ 50 °C (14 ~122 °F); 0 ~ 40 °C (32 ~104 °F) for charging	-10 ~ 50 °C (14 ~122 °F); 0 ~ 40 °C (32 ~104 °F) for charging
	Storage Temperature	-20 ~ 70 °C (-4 ~ 158 °F)	-20 ~ 70 °C (-4 ~ 158 °F)
	Safety	CE, FCC, CCC	UL, CB, LVD, CCC
	Certifications	UL, CB, LVD, CCC	CE, FCC, CCC

Dimensions

Unit: mm

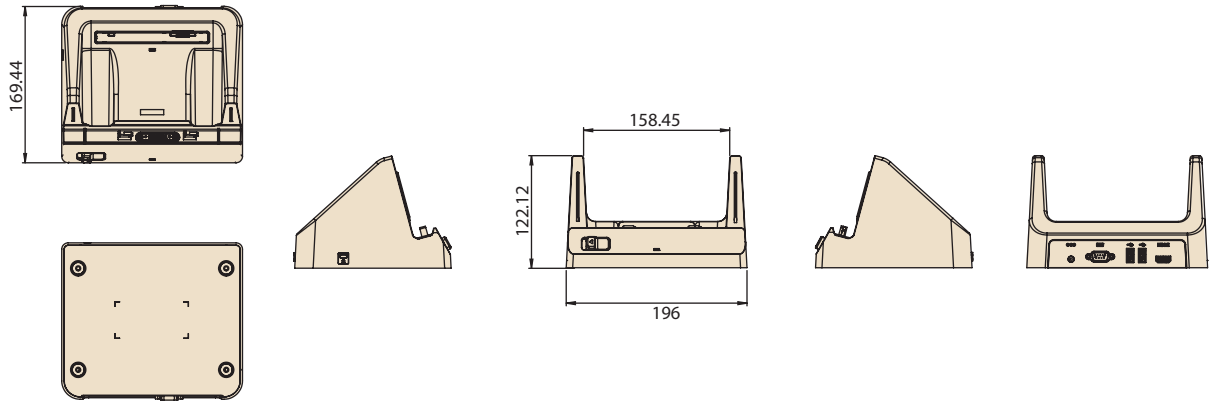

Ordering Information

Part Number	Description
AIM-OFD0-0480	AIM 10 advanced desk dock station
AIM-OFD0-0481	AIM 10 desk dock station

Packing List

Description
1 x AIM-DDS

AIM-MCS

Multi-Battery Charging Station for AIM

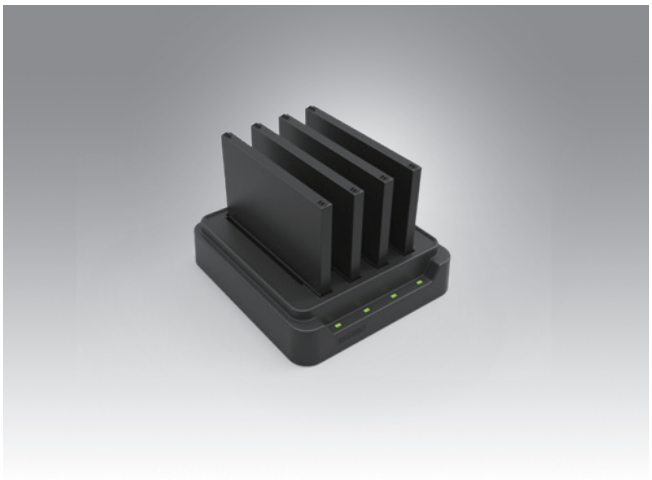

Features

- Supports charging of up to 4 batteries simultaneously
- Overcurrent and overvoltage protection provided
- LED indicators for monitoring charging status

Specifications

		Multi-Battery Charging Station for AIM
Capacity	Number of Bays	4
Power	Charging Current	1 A
	Charging Voltage	12.6 V
	Input Voltage	19 V
LED Indicators		Green: Full Amber: Charging Red: Error
Mechanical	Dimensions (W x D x H)	144 x 155 x 39 mm (5.7 x 6.1 x 1.5 in)
	Weight	0.48 kg (1.05 lb)
Environment	Operating Temperature	0 ~ 40 °C (32 ~104 °F)
	Storage Temperature	-10 ~ 50 °C (14 ~ 122 °F)
	Safety	UL, CB, LVD, CCC, RCM
	Certifications	CE, FCC, CCC, RCM, BSMI

Dimensions

Unit: mm

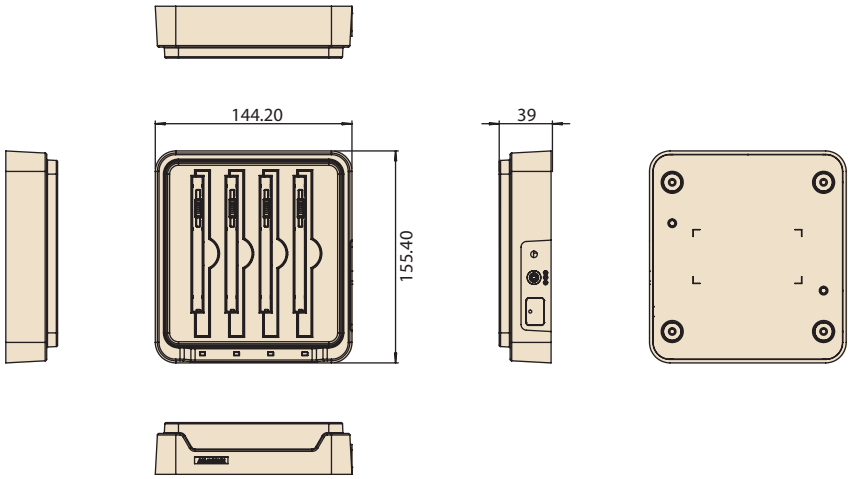

Ordering Information

Part Number	Description
AIM-MBC0-0051	Multi-battery charging station for AIM

Packing List

Description
1 x AIM-MCS
1 x AC/DC adaptor

AIM-68 Extensions and Accessories

Extension Modules

	Barcode Scanner (20°)	Barcode Scanner (70°)	LAN + COM Module	UHF RFID Reader
Part Number	**AIM-EXT0-0040**	**AIM-EXT0-0041**	**AIM-EXT0-0046**	**AIM-EXT0-0047 (EU)** **AIM-EXT0-0049 (US)**
Features	▪ Sensor: 640 x 480 CMOS sensor ▪ Illumination & Aiming: White LED illuminatoin/Red LED dot aimer ▪ Frame rate: 30 fps ▪ Field of view: Horizontal: 37.8°; Vertical: 28.8°	▪ Sensor: 640 x 480 CMOS sensor ▪ Illumination & Aiming: White LED illuminatoin/Red LED dot aimer ▪ Frame rate: 30 fps ▪ Field of view: Horizontal: 37.8°; Vertical: 28.8°	1 x 10/100 Ethernet port 1 x COM port	▪ RFID output power: 25 watt ▪ RFID antenna type: Linear polarization ▪ Frequency: EU: 867 ~ 869MHz; US: 913 ~ 917 MHz ▪ Tag standard supported: EPC Class 2 Gen. 2/ ISO 18000-6C
Dimensions	130.2 x 38.7 x 27.8 mm (5.12 x 1.52 x 1.09 in)	130.2 x 38.7 x 32 mm (5.12 x 1.52 x 1.25 in)	130.2 x 70 x 29 mm (5.12 x 2.75 x 1.14 in)	130.2 x 63.6 x 65.9 mm (5.12 x 2.5 x2.59 in)
Weight	0.042 kg (0.092 lb)	0.042 kg (0.092 lb)	0.078 kg (0.171 lb)	0.08 kg (0.176 lb)

Accessories

	Hand Strap	Shoulder Strap	Active Stylus	Battery with Meter
Part Number	**AIM-SRP0-0000**	**AIM-SRP0-0001**	**AIM-P704**	**AIM-BAT0-0452**
Color	Black	Black	Black	Black
Dimensions	240 x 20 mm (9.44 x 0.78 in)	380 x 135 x 20 mm (14.96 x 5.31 x 0.78 in)	140 x 9.7 mm (5.51 x 0.38 in)	120 x 87 x 7.5 mm (4.72 x 3.43 x 0.30 in)
Weight	0.022 kg (0.048 lb)	0.05 kg (0.11 lb)	0.02 kg (0.044 lb)	0.147 kg (0.324 lb)

Tento produkt můžete zakoupit u společnosti AutoCont IPC a.s.

AutoCont IPC a.s.

Váš dodavatel průmyslových počítačů, komponent a speciálních průmyslových IT systémů.

Uhlířská 1064/3, 710 00 Ostrava, Česká republika

obchod@autocont-ipc.cz +420 552 301 002 www.autocont-ipc.cz

PRŮMYSLOVÉ POČÍTAČE
fanless embedded PC, do racku, ...

POČÍTAČE S DISPLEJEM
panelové PC, terminály, do vozidel, ...

AUTOMATIZACE A SBĚR DAT
převodníky, karty, moduly, switche, ...

PERIFERIE A KOMPONENTY
monitory, klávesnice, desky, skříně, ...

NOTEBOOKY A TABLETY
odolné, windows, android, IP65, ...

INFORMAČNÍ KIOSKY
interiérové, venkovní, ...

MEDICÍNSKÁ TECHNIKA
počítače, tablety, LCD, klávesnice, ...

SOFTWAROVÁ ŘEŠENÍ
pro výrobu, zaměstnance, kiosky, ...

PŘEJÍT DO E-SHOPU
eshop.autocont-ipc.cz

DOPRAVA ZDARMA
Doprava zdarma v ČR a SR při objednávce nad 10 000 Kč bez DPH nebo nad 400 EUR.

PRODLOUŽENÁ ZÁRUKA
Záruka 2 roky na vyráběné počítače s možností jejího prodloužení až na 5 let.

ODMĚNA ZA VĚRNOST
Pravidelní zákazníci u nás nakupují za nižší ceny. Výše slevy se odvíjí od realizovaného obratu.

SERVIS ON-SITE A IN-TIME
K projektovým dodávkám nabízíme rozšířenou podporu a servis s garancí výměny zařízení do 48 hodin.