TPC-651T

5.7"/6.5" VGA TFT LED LCD Thin-Client Terminal with Intel® Atom™ Processor

Features

- Industrial-grade 5.7/6.5" VGA TFT LCD with 50K lifetime and LED backlight
- Intel® Atom™ E3827 1.75 GHz dual-core processor with 4 GB DDR3L SDRAM
- Compact, fanless embedded system with aluminum alloy front bezel
- Wide operating temperature range -20 ~ 60 °C (-4 ~ 140 °F)
- True-flat, IP65-rated front panel
- Front-facing LED indicators to show operating status
- Durable touchscreen with 5-wire resistive touch control
- Supports Advantech's iDoor technology for integrating optional accessories
- Supports AC/DC input with optional power adapter
- Chassis grounding protection
- Supports Advantech's WISE-PaaS/RMM remote management software

Introduction

The TPC-651T thin-client terminal is equipped with a 5.7"/6.5" VGA TFT LCD, low-power Intel® Atom™ E3827 1.75 GHz dual-core processor, and 4 GB DDR3L SDRAM to deliver high-performance computing in a compact, fanless system. To enhance the system's durability, TPC-651T features a true-flat touchscreen with IP66-rated front panel, die-cast aluminum alloy front bezel, and 5-wire resistive touch control. In addition to supporting a wide operating temperature range (-20 ~ 60 °C/-4 ~ 140 °F), TPC-651T includes a full-size mini PCIe slot for extending the system functionalities to satisfy diverse automation application needs. Moreover, Advantech's iDoor technology can be integrated via the mini PCIe slot in order to provide additional I/O connectors, isolated digital I/O, fieldbus protocols, 3G/GPS/GPRS/Wi-Fi communication, and MRAM.

Specifications

General

- **BIOS** AMI UEFI
- **Certification** BSMI, CCC, CE, FCC Class A, UL
- **Cooling System** Fanless design
- **Dimensions (W x H x D)** 199 x 152 x 58.9 mm (7.83 x 5.98 x 2.32 in)
- **Enclosure** Front bezel: Die cast aluminum alloy
Back housing: SECC
- **Mounting** Desktop, Wall or Panel Mount
- **OS Support** Microsoft® WES7 (32/64-bit), WE8S (64-bit), Windows 7 (32/64-bit), Windows 8.1 (32/64-bit), Windows 10 Enterprise LTSB
- **Power Consumption** 19.2 W (typical)
- **Power Input** $24V_{DC}$ +/- 20%
- **Watchdog Timer** 1 ~ 255 sec (system)
- **Weight (Net)** 1.5 kg (3.3 lb)

System Hardware

- **CPU** Intel® Atom™ E3827 1.75 GHz dual-core processor
- **Memory** 1 x SODIMM with 4 GB DDR3L SDRAM (supports up to 8 GB)
- **LAN** 10/100/1000BASE-T x 2
- **Expansion Slots** Full-size mini PCIe
- **Storage** 1 x CFast
1 x RS-232
1 x RS-232/422/485
1 x USB 3.0
1 x USB 2.0

LCD Display

- **Display Type** VGA TFT LED LCD
- **Display Size** 5.7"/6.5"
- **Max. Resolution** 640 x 480
- **Max. Colors** 262K
- **Luminance cd/m²** 550/800
- **Viewing Angle (H/V°)** 160/140
- **Backlight Life** 50,000 hr
- **Contrast Ratio** 800:1/600:1

Touchscreen

- **Lifespan** 36 million touches at a single point
- **Light Transmission** Above 75%
- **Resolution** Linearity
- **Type** 5-wire analog resistive

Environment

- **Humidity** 10 ~ 95% RH @ 40 °C, non-condensing
- **Ingress Protection** Front panel: IP66
- **Operating Temperature** -20 ~ 60 °C (-4 ~ 140 °F)
- **Storage Temperature** -30 ~ 70 °C (-22 ~ 158 °F)
- **Vibration Protection** With CFast: 2 Grms (5~500 Hz)
With HDD: 1 Grms (5 ~ 500 Hz)
(Operating, random vibration)

Rear View

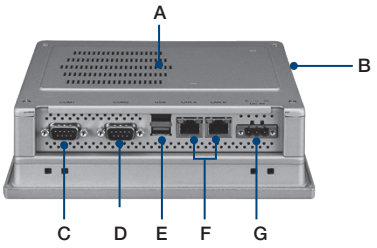

A. External HDD/SSD/iDoor kit (TPC-1251T-EHKE) (optional)
B. CFast
C. RS-232
D. RS-232/422/485
E. USB 3.0 & 2.0
F. LAN (10/100/1000)
G. Power receptor

All product specifications are subject to change without notice.

Last updated: 27-Jun-2018

Dimensions

Unit: mm

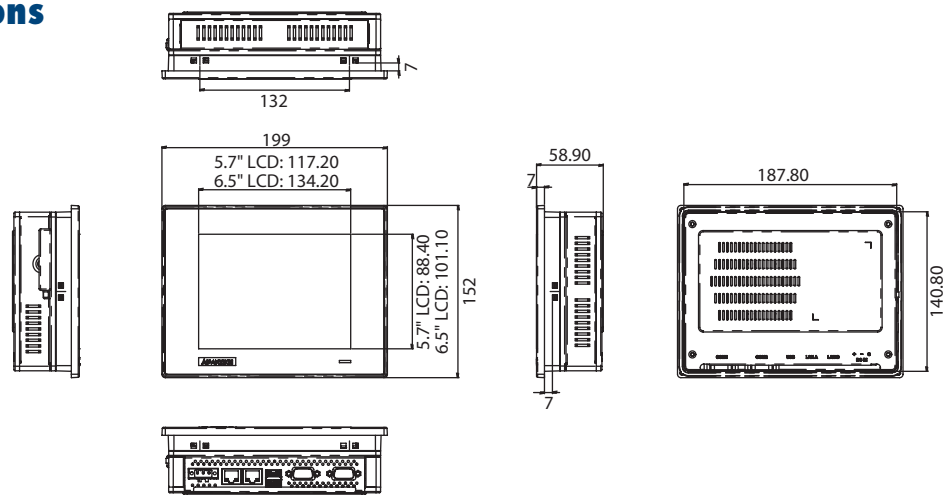

Panel Cutout Dimensions: 189.1 x 142.1 mm (7.44 x 5.59 in)

Ordering Information

- **TPC-651T-E3AE** 5.7" VGA Panel PC, Intel® Atom™ E3827 1.75 GHz Dual-core Processor, 4GB (True-flat touchscreen)
- **TPC-651H-E3AE** 5.7" VGA Panel PC, Intel® Atom™ E3827 1.75 GHz Dual-core Processor, 4GB (Non-flat touchscreen IP65 certified traditional TPC front panel)
- **TPC-651T-6E3AE** 6.5" VGA Panel PC, Intel® Atom™ E3827 1.75 GHz Dual-core Processor, 4GB (True-flat touchscreen)

Optional Accessories

- **PWR-247-CE** 60W DC 24V/2.5A Output Power Supply
- **TPC-1251T-EHKE** HDD/SSD and iDoor extension kit
- **1702002600** Power Cable US Plug 1.8 M
- **1702002605** Power Cable EU Plug 1.8 M
- **1702031801** Power Cable UK Plug 1.8 M
- **1700000596-11** Power Cable China/Australia Plug 1.8 M

Embedded OS

- **20703WE7PS0004** TPC-xx51T/H WS7P x64 MUI Image V4.18
- **20703WE7PS0005** TPC-xx51T/H WS7P x86 MUI Image V4.18
- **2070015041** TPC-xx51T-(6)xxAE Win10 2016LTSB v6.01 image
- **2070014677** TPC-xx51T/H WEC7 x64 MUI Image V4.01

S/W Bundle Offering

- **WA-HT651T-E15H1AE** TPC-651T-6E3AE, HMI Runtime 1500 tags, 32G CFast, WES7P

iDoor Modules (TPC-1251T-EHKE is required for iDoor modules)

- **PCM-26D2CA-AE** SJA1000 CANBus, CANOpen, DB9 x 2
- **PCM-26D1DB-MAE** Hilscher netX100 FieldBus, ProfiBus, DB9 x 1
- **PCM-27D24DI-AE** Digital I/O, 16 DI / 8 DO, Isolation, DB37 x 1
- **PCM-24D2R4-AE** OXPCIe-952 UART, Isolated RS-422/485, DB9 x 2
- **PCM-24D2R2-AE** OXPCIe-952 UART, Isolated RS-232, DB9 x 2
- **PCM-24R2GL-AE** 2 Port Giga LAN Intel i350 PCIe mini card
- **PCM-24R1TP-AE** Intel 82574L, GbE, IEEE 1588 PTP, RJ45 x 1
- **PCM-24S2WF-AE** 802.11 a/b/g/n 2T2R w/ BT4.0, Atheros AR9462

Application Software

WebAccess/SCADA	Advantech WebAccess/SCADA is a 100% browser-based IIoT software platform aimed at supervisory control and data acquisition (SCADA) operations. WebAccess/SCADA provides open interfaces that allow our customers and partners to develop unique IoT applications for different vertical markets. In addition to supporting traditional SCADA functions, the platform features an HTML5-based user interface and intelligent dashboard to facilitate cross-platform, cross-browser data analysis. Moreover, WebAccess/SCADA not only offers built-in widgets, but is also equipped with an innovative Widget Builder that enables customers to build their own widgets.
WebAccess/HMI	Advantech WebAccess/HMI is human-machine interface (HMI) software based on Microsoft's Windows operating system. This software features excellent communication and monitoring capabilities, supports more than 350 PLC communication protocols, and offers a wide choice of screen design objects to satisfy diverse integrations of factory automation and HMI operation and monitoring requirements.

Tento produkt můžete zakoupit u společnosti AutoCont IPC a.s.

AutoCont IPC a.s.

Váš dodavatel průmyslových počítačů, komponent a speciálních průmyslových IT systémů.

Uhlířská 1064/3, 710 00 Ostrava, Česká republika

obchod@autocont-ipc.cz +420 552 301 002 www.autocont-ipc.cz

PRŮMYSLOVÉ POČÍTAČE
fanless embedded PC, do racku, ...

POČÍTAČE S DISPLEJEM
panelové PC, terminály, do vozidel, ...

AUTOMATIZACE A SBĚR DAT
převodníky, karty, moduly, switche, ...

PERIFERIE A KOMPONENTY
monitory, klávesnice, desky, skříně, ...

NOTEBOOKY A TABLETY
odolné, windows, android, IP65, ...

INFORMAČNÍ KIOSKY
interiérové, venkovní, ...

MEDICÍNSKÁ TECHNIKA
počítače, tablety, LCD, klávesnice, ...

SOFTWAROVÁ ŘEŠENÍ
pro výrobu, zaměstnance, kiosky, ...

PŘEJÍT DO E-SHOPU
eshop.autocont-ipc.cz

DOPRAVA ZDARMA
Doprava zdarma v ČR a SR při objednávce nad 10 000 Kč bez DPH nebo nad 400 EUR.

PRODLOUŽENÁ ZÁRUKA
Záruka 2 roky na vyráběné počítače s možností jejího prodloužení až na 5 let.

ODMĚNA ZA VĚRNOST
Pravidelní zákazníci u nás nakupují za nižší ceny. Výše slevy se odvíjí od realizovaného obratu.

SERVIS ON-SITE A IN-TIME
K projektovým dodávkám nabízíme rozšířenou podporu a servis s garancí výměny zařízení do 48 hodin.