EDS-P308 Series

8-port PoE unmanaged Ethernet switches

- 4 IEEE 802.3af compliant PoE and Ethernet combo ports
- Up to 15.4 watts at 48 VDC per PoE port
- Intelligent power consumption detection and classification
- Redundant dual VDC power inputs
- -40 to 75°C operating temperature range (T models)

Introduction

The EDS-P308 switches are smart, 8-port, unmanaged Ethernet switches supporting PoE (Power-over-Ethernet) on ports 1 to 4. The switches are classified as power source equipment (PSE), and when used in this way, the EDS-P308 switches enable centralization of the power supply and provide up to 15.4 watts of power per port. The switches can be used to power IEEE 802.3af compliant powered devices (PD), eliminating the need for additional wiring, and support IEEE 802.3/802.3u/802.3x with 10/100M, full/half-duplex, MDI/MDI-X auto-sensing to provide an economical solution for your industrial Ethernet network. In addition, the built-in relay warning function alerts network engineers when power failures or port breaks occur.

Specifications

Technology

Standards:
IEEE 802.3af for Power-over-Ethernet
IEEE 802.3 for 10BaseT
IEEE 802.3u for 100BaseT(X)
IEEE 802.3x for Flow Control
Processing Type: Store and Forward
Flow Control: IEEE 802.3x flow control, back pressure flow control

Switch Properties

MAC Table Size: 1 K
Packet Buffer Size: 512 Kbit

Interface

Fiber Ports: 100BaseFX ports (SC connector)
RJ45 Ports: 10/100BaseT(X) auto negotiation speed, Full/Half duplex mode, and auto MDI/MDI-X connection
DIP Switches: Port break alarm mask
LED Indicators: PWR1, PWR2, FAULT, 10/100M, PoE
Alarm Contact: 1 relay output with current carrying capacity of 0.5 A @ 48 VDC

Optical Fiber

	100BaseFX	
	Multi-mode	Single-mode
Wavelength	1300 nm	1310 nm
Max. TX	-10 dBm	0 dBm
Min. TX	-20 dBm	-5 dBm
RX Sensitivity	-32 dBm	-34 dBm
Link Budget	12 dB	29 dB
Typical Distance	5 km [a] 4 km [b]	40 km [c]
Saturation	-6 dBm	-3 dBm

a. 50/125 μm, 800 MHz*km fiber optic cable
b. 62.5/125 μm, 500 MHz*km fiber optic cable
c. 9/125 μm single-mode fiber optic cable

Power Requirements

Input Voltage: 48 (46 to 50 V) VDC, redundant inputs
Input Current: Max. 1.6 A @ 48 V (supports up to 4 ports at 15.4 W per PoE port)
Overload Current Protection: 2.5 A @ 48 VDC
Connection: 1 removable 6-contact terminal block
Reverse Polarity Protection: Present

Physical Characteristics

Housing: Metal, IP30 protection
Dimensions: 53.6 × 135 × 105 mm (2.11 x 5.31 x 4.13 in)
Weight: 840 g
Installation: DIN-Rail mounting, wall mounting (with optional kit)

Environmental Limits

Operating Temperature:
Standard Models: 0 to 60°C (32 to 140°F)
Wide Temp. Models: -40 to 75°C (-40 to 167°F)
Storage Temperature: -40 to 85°C (-40 to 185°F)
Ambient Relative Humidity: 5 to 95% (non-condensing)

Standards and Certifications

Safety: UL 508
EMI: FCC Part 15 Subpart B Class A, EN 55022 Class A
EMS:
EN 61000-4-2 (ESD) Level 3, EN 61000-4-3 (RS) Level 3, EN 61000-4-4 (EFT) Level 4, EN 61000-4-5 (Surge) Level 4, EN 61000-4-6 (CS) Level 3, EN61000-4-8
Marine: DNV, GL, LR, ABS, NK
Shock: IEC 60068-2-27
Freefall: IEC 60068-2-32
Vibration: IEC 60068-2-6
Note: Please check Moxa's website for the most up-to-date certification status.

MTBF (mean time between failures)

Time: 360,000 hrs
Database: Telcordia (Bellcore), GB

Warranty

Warranty Period: 5 years
Details: See www.moxa.com/warranty

Dimensions

Unit: mm (inch)

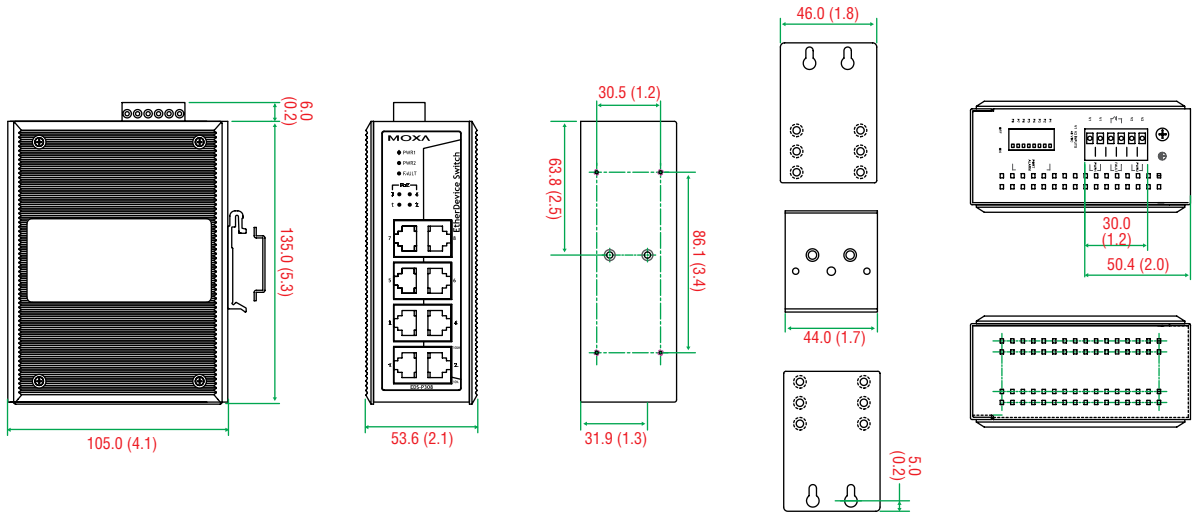

Side View | Front View | Rear View | DIN-Rail/Panel Mounting Kit | Top and Bottom Views

Ordering Information

Available Models		Port Interface			
				100BaseFX	
Standard Temperature (0 to 60°C)	Wide Temperature (-40 to 75°C)	10/100BaseT(X)	PoE, 10/100BaseT(X)	Mulit-mode, SC Connector	Single-mode, SC Connector
EDS-P308	EDS-P308-T	4	4	–	–
EDS-P308-M-SC	EDS-P308-M-SC-T	3	4	1	–
EDS-P308-S-SC	EDS-P308-S-SC-T	3	4	–	1
EDS-P308-MM-SC	EDS-P308-MM-SC-T	2	4	2	–
EDS-P308-SS-SC	EDS-P308-SS-SC-T	2	4	–	2

Optional Accessories (can be purchased separately)

DR-75-48/120-48: 75/120 W DIN-Rail 48 VDC power supplies
WK-46: Wall mounting kit
RK-4U: 4U-high 19" rack mounting kit

Package Checklist

- EDS-P308 switch
- Protective caps for unused ports
- Hardware installation guide (printed)
- Warranty card

INJ-24 Series

IEEE 802.3af/at Gigabit PoE+ Injectors

- PoE injector for 10/100/1000M networks; inject power and data to PD (Power Device) equipment
- IEEE 802.3af/at compliant; supports a full 30 watt output
- 24/48 VDC wide range power input
- -40 to 75°C operating temperature range (T model)

Specifications

Technology
Standards:
IEEE 802.3af/at for Power-over-Ethernet
IEEE 802.3 for 10BaseT
IEEE 802.3u for 100BaseT(X)
IEEE 802.3ab for 1000BaseT(X)

Interface
RJ45 Ports: 10/100/1000BaseT(X) for PoE OUT and DATA IN
LED Indicators: Power, PoE

Power Requirements
Input Voltage: 24/48 (20 to 60 V) VDC, redundant inputs
Input Current: Max. 1.3 A @ 24 VDC (supports up to 4 ports at 30 watts per PoE port)
Overload Current Protection: Present
Connection: 1 removable 3-contact terminal block
Reverse Polarity Protection: Present

Physical Characteristics
Housing: Plastic, IP30 protection
Dimensions: 24.9 × 100 × 86.2 mm (0.98 x 3.93 x 3.39 in)
Weight: 115 g
Installation: DIN-Rail mounting

Environmental Limits
Operating Temperature:
Standard Models: 0 to 60°C (32 to 140°F)
Wide Temp. Models: -40 to 75°C (-40 to 167°F)
Storage Temperature: -40 to 85°C (-40 to 185°F)
Ambient Relative Humidity: 5 to 95% (non-condensing)

Standards and Certifications
Safety: UL 508
EMI: FCC Part 15 Subpart B Class A, EN 55022 Class A
EMS:
EN 61000-4-2 (ESD) Level 3, EN 61000-4-3 (RS) Level 3,
EN 61000-4-4 (EFT) Level 3, EN 61000-4-5 (Surge) Level 3,
EN 61000-4-6 (CS) Level 3, EN 61000-4-8
Rail Traffic: EN 50121-4 (Pending)
Shock: IEC 60068-2-27
Freefall: IEC 60068-2-32
Vibration: IEC 60068-2-6
Note: Please check Moxa's website for the most up-to-date certification status.

MTBF (mean time between failures)
Time: 2,500,000 hrs
Database: Telcordia (Bellcore), GB

Warranty
Warranty Period: 5 years
Details: See www.moxa.com/warranty

Dimensions

Unit: mm (inch)

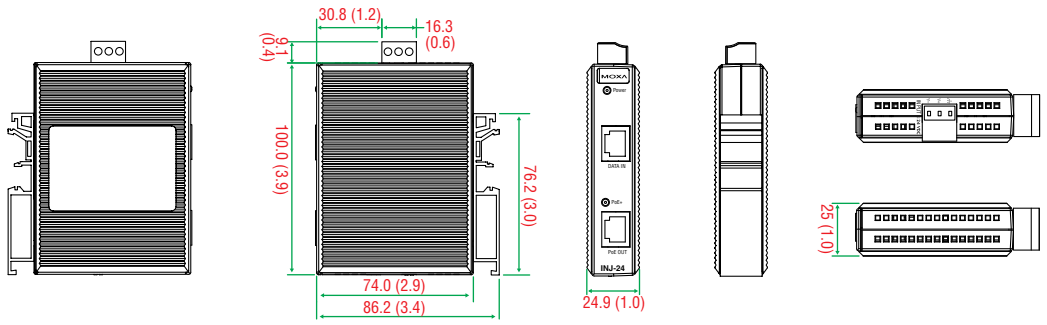

Side View | Side View | Front View | Rear View | Top and Bottom Views

Ordering Information

Available Models
INJ-24: PoE+ Injector, maximum output of 30 W at 24/48 VDC, 0 to 60°C operating temperature
INJ-24-T: PoE+ Injector, maximum output of 30 W at 24/48 VDC, -40 to 75°C operating temperature

Package Checklist
- INJ-24 PoE+ injector
- Hardware installation guide (printed)
- Warranty card

SPL-24 Series

PoE splitters

- IEEE 802.3af compliant; splits power and data from PoE equipment
- Supports output power up to 12.95 W at 24 VDC
- Short circuit protection for power output
- -40 to 75°C operating temperature range (T model)
- DIN-Rail mounting ability

Specifications

Technology
Standards:
IEEE 802.3af for Power-over-Ethernet
IEEE 802.3 for 10BaseT
IEEE 802.3u for 100BaseT(X)

Interface
RJ45 Ports: 10/100BaseT(X) for PoE IN and DATA OUT
LED Indicators: Power

Power Requirements
Input Voltage: 44 to 75 VDC (PoE)
Output Voltage: 24 VDC
Overload Current Protection: 400 mA @ 48 VDC input
Connection: 1 removable 3-contact terminal block for output
Output Power: Max. 12.95 watts (0.54 A @ 24 VDC)

Physical Characteristics
Housing: Plastic, IP30 protection
Dimensions: 24.9 × 100 × 86.2 mm (0.98 x 3.93 x 3.39 in)
Weight: 95 g
Installation: DIN-Rail mounting

Environmental Limits
Operating Temperature:
Standard Models: 0 to 60°C (32 to 140°F)
Wide Temp. Models: -40 to 75°C (-40 to 167°F)
Storage Temperature: -40 to 85°C (-40 to 185°F)
Ambient Relative Humidity: 5 to 95% (non-condensing)

Standards and Certifications
EMI: FCC Part 15 Subpart B Class B, EN 55022 Class A
EMS:
EN 61000-4-2 (ESD) Level 3, EN 61000-4-3 (RS) Level 3,
EN 61000-4-4 (EFT) Level 3, EN 61000-4-5 (Surge) Level 3,
EN 61000-4-6 (CS) Level 3, EN 61000-4-8
Marine: DNV, GL, LR, ABS, NK
Shock: IEC 60068-2-27
Freefall: IEC 60068-2-32
Vibration: IEC 60068-2-6
Note: Please check Moxa's website for the most up-to-date certification status.

MTBF (mean time between failures)
Time: 5,100,000 hrs
Database: MIL-HDBK-217F, GB 25°C

Warranty
Warranty Period: 5 years
Details: See www.moxa.com/warranty

Dimensions
Unit: mm (inch)

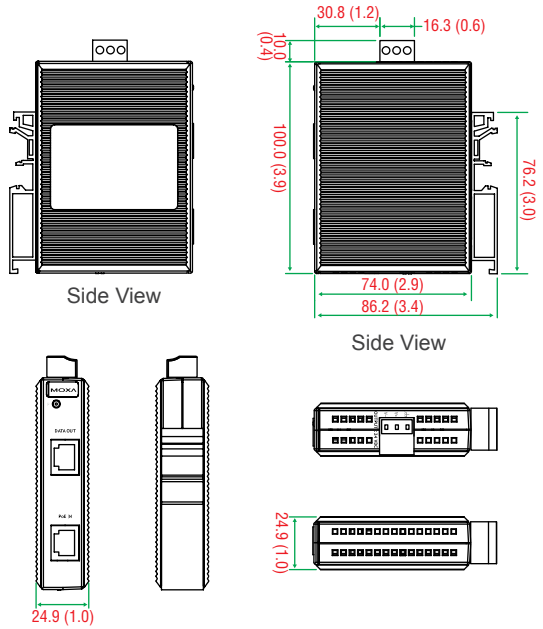

Ordering Information

Available Models
SPL-24: PoE splitter, maximum output of 12.95 W at 24 VDC, 0 to 60°C operating temperature
SPL-24-T: PoE splitter, maximum output of 12.95 W at 24 VDC, -40 to 75°C operating temperature

Package Checklist
- SPL-24 PoE splitter
- Hardware installation guide (printed)
- Warranty card

© Moxa Inc. All Rights Reserved. Updated Jun. 9, 2011. Specifications subject to change without notice. Please visit our website for the most up-to-date product information.

Tento produkt můžete zakoupit u společnosti AutoCont IPC a.s.

AutoCont IPC a.s.

Váš dodavatel průmyslových počítačů, komponent a speciálních průmyslových IT systémů.

Uhlířská 1064/3, 710 00 Ostrava, Česká republika

obchod@autocont-ipc.cz +420 552 301 002 www.autocont-ipc.cz

PRŮMYSLOVÉ POČÍTAČE
fanless embedded PC, do racku, ...

POČÍTAČE S DISPLEJEM
panelové PC, terminály, do vozidel, ...

AUTOMATIZACE A SBĚR DAT
převodníky, karty, moduly, switche, ...

PERIFERIE A KOMPONENTY
monitory, klávesnice, desky, skříně, ...

NOTEBOOKY A TABLETY
odolné, windows, android, IP65, ...

INFORMAČNÍ KIOSKY
interiérové, venkovní, ...

MEDICÍNSKÁ TECHNIKA
počítače, tablety, LCD, klávesnice, ...

SOFTWAROVÁ ŘEŠENÍ
pro výrobu, zaměstnance, kiosky, ...

PŘEJÍT DO E-SHOPU
eshop.autocont-ipc.cz

DOPRAVA ZDARMA
Doprava zdarma v ČR a SR při objednávce nad 10 000 Kč bez DPH nebo nad 400 EUR.

PRODLOUŽENÁ ZÁRUKA
Záruka 2 roky na vyráběné počítače s možností jejího prodloužení až na 5 let.

ODMĚNA ZA VĚRNOST
Pravidelní zákazníci u nás nakupují za nižší ceny. Výše slevy se odvíjí od realizovaného obratu.

SERVIS ON-SITE A IN-TIME
K projektovým dodávkám nabízíme rozšířenou podporu a servis s garancí výměny zařízení do 48 hodin.